Leica M165 FC & 205 FA

Fluorescence Stereomicroscopes Technical Information

Living up to Life

Leica
MICROSYSTEMS

Technical Data
Performance Characteristics

	Leica M165 FC	Leica M205 FA
Optical data		
Zoom	16.5 : 1 manual	20.5 : 1 automated with FusionOptics™
Data with standard optics (1×objective/10× eyepieces) – Zoom range – Resolution – Working distance – Object field	 7.3×–120× max. 453 lp/mm 61.5 mm (planapochromat) ∅ 31.5 mm – 1.92 mm	 7.8×–160× max. 525 lp/mm 61.5 mm (planapochromat) ∅ 29.5 mm – 1.44 mm
Maximum values (based on optics combination) – Magnification – Resolution – Visible structural width – Numerical aperture – Object field	 960× 906 lp / mm 551 nm 0.302 ∅ 63 mm	 1280× 1050 lp / mm 476 nm 0.35 ∅ 59 mm
Working distances	135 mm (0.5× planachromat) 112 mm (0.8× planachromat) 67 mm (0.63× planapochromat) 61.5 mm (1× planapochromat) 30.5 mm (1.6× planapochromat) 20.1 mm (2× planapochromat)	135 mm (0.5× planachromat) 112 mm (0.8× planachromat) 67 mm (0.63× planapochromat) 61.5 mm (1× planapochromat) 30.5 mm (1.6× planapochromat) 20.1 mm (2× planapochromat)
Optics carrier		
100% apochromatic optical system	CMO (Common Main Objective) lead-free	CMO (Common Main Objective) lead-free
Specific surface resistivity (housing)	2×10^{11} Ω/mm² discharge time <2 seconds from 1000V to 100V	2×10^{11} Ω/mm² discharge time <2 seconds from 1000V to 100V
Encoded/automated (M205 FA)	Zoom, iris diaphragm, objective nosepiece	Zoom, iris diaphragm, objective nosepiece, FIM, filter
Engageable zoom notches	13 for repetitive tasks	14 for repetitive tasks
Double-iris diaphragm for depth of field control	Built-in and encoded	Built-in and motorized
FIM (Fluorescence Intensity Control)	–	Built-in and motorized

	Leica M165 FC	Leica M205 FA
Accessories		
Standard objective (parfocal in the objective nosepiece)	1× planapochromat	1× planapochromat
Additional objectives (parfocal in the objective nosepiece)	5× planachromat, 2× planapochromat, 1.6× planapochromat, 0.63× planapochromat	5× planachromat, 2× planapochromat, 1.6× planapochromat, 0.63× planapochromat
Additional objectives (non-parfocal)	1× planachromat, 0.8× planapochromat, 0.63× planapochromat, 0.5× planapochromat	1× planachromat, 0.8× planapochromat, 0.63× planapochromat, 0.5× planapochromat
Interpupillary distance	50 mm–105 mm	50 mm–105 mm
Wide-field eyepieces for persons wearing glasses	10×, 16×, 25×, 40×, with replaceable eyecups & click stop	10×, 16×, 25×, 40×, with replaceable eyecups & click stop
Manual coarse/fine focus	Focusing range 130 mm, adjustable ease of movement	Focusing range 130 mm, adjustable ease of movement
Motorized focusing drive	Motorized focusing drive with 431 mm profile column, with power supply	Motorized focusing drive with 431 mm profile column, with power supply
Computer interface	USB	USB

Module System

	Leica M165 FC and M205 FA
	Stands, illuminators
Transmitted light stands	For bright field and bright/dark field, high-performance base: Bright field, single-sided dark field, with Rottermann Contrast and CCIC
Incident light stand	Large incident light base with black/white stage plate and Antishock™ feet
Stages	Gliding stage, MATS heating stage, cup stage, rotatable polarization stage, Leica IsoPro™ mechanical stage (manual and motorized)
Illuminators	LED5000 MCI™ and LED5000 RL, fluorescence, oblique, coaxial, cold light sources
	Misc. accessories
Photography, video	– Leica DFC digital image capture system, various camera variants, Leica IC D – Leica IC A video module – Various adapters for commercially available CCD cameras
Image archiving, image processing	Leica AF6000: Special software for all fluorescence tasks Leica Application Suite (LAS): consisting of basic program and various auxiliary modules
Measurement graticules	For length measurements and counting
Vertical and oblique observation	45° side view around the complete object
Drawing tube	For both left and right-handed users

For detailed information about optical accessories, binocular tubes, stands, illuminators and additional accessory modules for various applications, refer to the brochure "Leica M Stereomicroscopes – The Modular System", M1-105-4en.

Leica M165 FC Optical Data

Objectives		0.5× planachromat		0.63× planapochromat		0.8× planachromat		1× planachromat	1× planapochromat	1.6× planapochromat		2× planapochromat		5× planapochromat (in FluoCombi III™)	
Working distances		135 mm		97 mm	67 mm	112 mm		59 mm	61.5 mm	30.5 mm		20.1 mm		19 mm	
Eyepieces	Zoom setting	Total mag. ×	Object field ∅ mm	Total mag. ×	Object field ∅ mm	Total mag. ×	Object field ∅ mm	Total mag. ×	Object field ∅ mm	Total mag. ×	Object field ∅ mm	Total mag. ×	Object field ∅ mm	Total mag. ×	Object field ∅ mm
10×/23B	0.73	3.65	63	4.67	49.2	5.84	39.4	7.3	31.5	11.7	19.7	14.6	15.8	29.2	1.6
	1	5	46	6.4	35.9	8	28.8	10	23	16	14.4	20	11.5	40	1.6
	1.6	8	28.8	10.2	22.5	12.8	18	16	14.4	25.6	8.98	32	7.19	64	1.6
	2	10	23	12.8	18	16	14.4	20	11.5	32	7.19	40	5.75	80	1.6
	2.5	12.5	18.4	16	14.4	20	11.5	25	9.2	40	5.75	50	4.6	100	1.6
	3.2	16	14.4	20.5	11.2	25.6	8.98	32	7.19	51.2	4.49	64	3.59	128	1.6
	4	20	11.5	25.6	8.98	32	7.19	40	5.75	64	3.59	80	2.88	160	1.44
	5	25	9.2	32	7.19	40	5.75	50	4.6	80	2.88	100	2.3	200	1.15
	6.3	31.5	7.3	40.3	5.7	50.4	4.56	63	3.65	101	2.28	126	1.83	252	0.913
	8	40	5.75	51.2	4.49	64	3.59	80	2.88	128	1.8	160	1.44	320	0.719
	10	50	4.6	64	3.59	80	2.88	100	2.3	160	1.44	200	1.15	400	0.575
	12	60	3.83	76.8	2.99	96	2.4	120	1.92	192	1.2	240	0.96	480	0.479
16×/15B	0.73	5.84	41.1	7.48	32.1	9.34	25.7	11.7	20.5	18.7	12.8	23.4	10.3	46.7	1.6
	1	8	30	10.2	23.4	12.8	18.8	16	15	25.6	9.38	32	7.5	64	1.6
	1.6	12.8	18.8	16.4	14.6	20.5	11.7	25.6	9.38	41	5.86	51.2	4.69	102	1.6
	2	16	15	20.5	11.7	25.6	9.38	32	7.5	51.2	4.69	64	3.75	128	1.6
	2.5	20	12	25.6	9.38	32	7.5	40	6	64	3.75	80	3	160	1.5
	3.2	25.6	9.38	32.8	7.32	41	5.86	51.2	4.69	81.9	2.93	102	2.34	205	1.17
	4	32	7.5	41	5.86	51.2	4.69	64	3.75	102	2.34	128	1.88	256	0.938
	5	40	6	51.2	4.69	64	3.75	80	3	128	1.88	160	1.5	320	0.75
	6.3	50.4	4.76	64.5	3.72	80.6	2.98	101	2.38	161	1.49	202	1.19	403	0.595
	8	64	3.75	81.9	2.93	102	2.34	128	1.88	205	1.17	256	0.94	512	0.469
	10	80	3	102	2.34	128	1.88	160	1.5	256	0.94	320	0.75	640	0.375
	12	96	2.5	123	1.95	154	1.56	192	1.25	307	0.78	384	0.63	768	0.313
25×/9.5B	0.73	9.13	27.4	11.7	21.4	14.6	17.1	18.3	13.7	29.2	8.56	36.5	6.85	73	1.6
	1	12.5	20	16	15.6	20	12.5	25	10	40	6.25	50	5	100	1.6
	1.6	20	12.5	25.6	9.77	32	7.81	40	6.25	64	3.91	80	3.13	160	1.56
	2	25	10	32	7.81	40	6.25	50	5	80	3.13	100	2.5	200	1.25
	2.5	31.3	8	40	6.25	50	5	62.5	4	100	2.5	125	2	250	1
	3.2	40	6.25	51.2	4.88	64	3.91	80	3.13	128	1.95	160	1.56	320	0.781
	4	50	5	64	3.91	80	3.13	100	2.5	160	1.56	200	1.25	400	0.625
	5	62.5	4	80	3.13	100	2.5	125	2	200	1.25	250	1	500	0.5
	6.3	78.8	3.17	101	2.48	126	1.98	158	1.59	252	0.99	315	0.79	630	0.397
	8	100	2.5	128	1.95	160	1.56	200	1.25	320	0.78	400	0.63	800	0.313
	10	125	2	160	1.56	200	1.25	250	1	400	0.63	500	0.5	1000	0.25
	12	150	1.67	192	1.3	240	1.04	300	0.83	480	0.52	600	0.42	1200	0.208
40×/6B	0.73	14.6	16.4	18.7	12.8	23.4	10.3	29.2	8.22	46.7	5.14	58.4	4.11	117	1.6
	1	20	12	25.6	9.38	32	7.5	40	6	64	3.75	80	3	160	1.5
	1.6	32	7.5	41	5.86	51.2	4.69	64	3.75	102	2.34	128	1.88	256	0.938
	2	40	6	51.2	4.69	64	3.75	80	3	128	1.88	160	1.5	320	0.75
	2.5	50	4.8	64	3.75	80	3	100	2.4	160	1.5	200	1.2	400	0.6
	3.2	64	3.75	81.9	2.93	102	2.34	128	1.88	205	1.17	256	0.94	512	0.469
	4	80	3	102	2.34	128	1.88	160	1.5	256	0.94	320	0.75	640	0.375
	5	100	2.4	128	1.88	160	1.5	200	1.2	320	0.75	400	0.6	800	0.3
	6.3	126	1.9	161	1.49	202	1.19	252	0.95	403	0.60	504	0.48	1008	0.238
	8	160	1.5	205	1.17	256	0.94	320	0.75	512	0.47	640	0.38	1280	0.188
	10	200	1.2	256	0.94	320	0.75	400	0.6	640	0.38	800	0.3	1600	0.15
	12	240	1	307	0.78	384	0.63	480	0.5	768	0.31	960	0.25	1920	0.125

Leica M205 FA Optical Data

Objectives		0.5× planachromat		0.63× planapochromat		0.8× planachromat		1× planachromat	1× planapochromat	1.6× planapochromat		2× planapochromat		5× planapochromat (in FluoCombi III™)	
Working distances		135mm		97 mm	67 mm	112 mm		59 mm	61.5 mm	30.5 mm		20.1 mm		19 mm	
Eyepieces	Zoom setting	Total mag. ×	Object field ∅ mm	Total mag. ×	Object field ∅ mm	Total mag. ×	Object field ∅ mm	Total mag. ×	Object field ∅ mm	Total mag. ×	Object field ∅ mm	Total mag. ×	Object field ∅ mm	Total mag. ×	Object field ∅ mm
10×/23B	0.78	3.9	59	4.99	46.1	6.24	36.9	7.8	29.5	12.5	18.4	15.6	14.7	31	1.6
	1	5	46	6.4	35.9	8	28.8	10	23	16	14.4	20	11.5	40	1.6
	1.6	8	28.8	10.2	22.5	12.8	18	16	14.4	25.6	8.98	32	7.19	64	1.6
	2	10	23	12.8	18.	16	14.4	20	11.5	32	7.19	40	5.75	80	1.6
	2.5	12.5	18.4	16	14.4	20	11.5	25	9.2	40	5.75	50	4.6	100	1.6
	4	20	11.5	25.6	8.98	32	7.19	40	5.75	64	3.59	80	2.88	160	1.44
	5	25	9.2	32	7.19	40	5.75	50	4.6	80	2.88	100	2.3	200	1.15
	6.3	31.5	7.3	40.3	5.7	50.4	4.56	63	3.65	101	2.28	126	1.83	252	0.913
	8	40	5.75	51.2	4.49	64	3.59	80	2.88	128	1.8	160	1.44	320	0.719
	10	50	4.6	64	3.59	80	2.88	100	2.3	160	1.44	200	1.15	400	0.575
	12.5	62.5	3.68	80	2.88	100	2.3	125	1.84	200	1.15	250	0.92	500	0.46
	16	80	2.88	102	2.25	128	1.8	160	1.44	256	0.90	320	0.72	640	0.359
16×/15B	0.78	6.24	38.5	11.4	19.6	9.98	24	12.5	19.2	20	12	25	9.62	49	1.6
	1	8	30	16	14	12.8	18.8	16	15	25.6	9.38	32	7.5	64	1.6
	1.6	12.8	18.8	20	11.2	20.5	11.7	25.6	9.38	41	5.86	51.2	4.69	102	1.6
	2	16	15	25	9	25.6	9.38	32	7.5	51.2	4.69	64	3.75	128	1.6
	2.5	20	12	32	7	32	7.5	40	6	64	3.75	80	3	160	1.5
	4	32	7.5	40	5.6	51.2	4.69	64	3.75	102	2.34	128	1.88	256	0.938
	5	40	6	50	4.5	64	3.75	80	3	128	1.88	160	1.5	320	0.75
	6.3	50.4	4.76	64	3.5	80.6	2.98	101	2.38	161	1.49	202	1.19	403	0.595
	8	64	3.75	72	3.1	102	2.34	128	1.88	205	1.17	256	0.94	512	0.469
	10	80	3	80	2.8	128	1.88	160	1.5	256	0.94	320	0.75	640	0.375
	12.5	100	2.4	100	2.2	160	1.5	200	1.2	320	0.75	400	0.6	800	0.3
	16	128	1.88	126	1.8	205	1.17	256	0.94	410	0.59	512	0.47	1024	0.234
25×/9.5B	0.78	9.75	25.6	12.5	20.	15.6	16	19.5	12.8	31.2	8.01	39	6.41	78	1.6
	1	12.5	20	16	15.6	20	12.5	25	10	40	6.25	50	5	100	1.6
	1.6	20	12.5	25.6	9.77	32	7.81	40	6.25	64	3.91	80	3.13	160	1.56
	2	25	10	32	7.81	40	6.25	50	5	80	3.13	100	2.5	200	1.25
	2.5	31.3	8	40	6.25	50	5	62.5	4	100	2.5	125	2	250	1
	4	50	5	64	3.91	80	3.13	100	2.5	160	1.56	200	1.25	400	0.625
	5	62.5	4	80	3.13	100	2.5	125	2	200	1.25	250	1	500	0.5
	6.3	78.8	3.17	101	2.48	126	1.98	158	1.59	252	0.99	315	0.79	630	0.397
	8	100	2.5	128	1.95	160	1.56	200	1.25	320	0.78	400	0.63	800	0.313
	10	125	2	160	1.56	200	1.25	250	1	400	0.63	500	0.5	1000	0.25
	12.5	156	1.6	200	1.25	250	1	313	0.8	500	0.5	625	0.4	1250	0.2
	16	200	1.25	256	0.98	25	9.62	400	0.63	640	0.39	800	0.31	1600	0.156
40×/6B	0.78	15.6	15.4	20	12.	25	9.62	31.2	7.69	49.9	4.81	62.4	3.85	125	1.6
	1	20	12	25.6	9.38	32	7.5	40	6	64	3.75	80	3	160	1.5
	1.6	32	7.5	41	5.86	51.2	4.69	64	3.75	102	2.34	128	1.88	256	0.938
	2	40	6	51.2	4.69	64	3.75	80	3	128	1.88	160	1.5	320	0.75
	2.5	50	4.8	64	3.75	80	3	100	2.4	160	1.5	200	1.2	400	0.6
	4	80	3	102	2.34	128	1.88	160	1.5	256	0.94	320	0.75	640	0.375
	5	100	2.4	128	1.88	160	1.5	200	1.2	320	0.75	400	0.6	800	0.3
	6.3	126	1.9	161	1.49	202	1.19	252	0.95	403	0.60	504	0.48	1008	0.238
	8	160	1.5	205	1.17	256	0.94	320	0.75	512	0.47	640	0.38	1280	0.188
	10	200	1.2	256	0.94	320	0.75	400	0.6	640	0.38	800	0.3	1600	0.15
	12.5	250	0.96	320	0.75	400	0.6	500	0.48	800	0.3	1000	0.24	2000	0.12
	16	320	0.75	410	0.59	512	0.47	640	0.38	1024	0.23	1280	0.19	2560	0.094

Major User Segments

Natural science	
Developmental biology	Organ development of the zebrafish, development of the nervous and vascular system in the zebrafish
Molecular genetics	Cell-cycle studies in C. elegans, gene expression studies in zebrafish embryogenesis, expression analyses in transgenic plants
Cell biology	Cell biology of the retina, observation of tumor cell invasion in cancer research, studies of blood cell development and capillary circulation
Neurology	Studies of neural transmission between nerves and muscles, development of the nervous system
Botany	Studies of genetic markers of transgenic plants
Pharmaceuticals	Studies of the effectiveness of pharmaceutical agents in cell biology assays
Forensics	Studies of textile fibers, fingerprints, bodily fluids, banknotes and forgeries

Industry	
Pharmaceuticals	Fluorescence identification in model organisms for developing medicines
Materials science	Analysis of hairline cracks, defective connections etc.
Semiconductor production	Identification of foreign particles, examination of photoresists etc.
Art restoration	Distinguishing various painting layers and removing excess varnish or dust

Furthermore, the Leica M165 FC and M205 FA high-performance stereomicroscopes meet the most stringent requirements of a large number of other applications.

Leica Design by Christophe Apothéloz

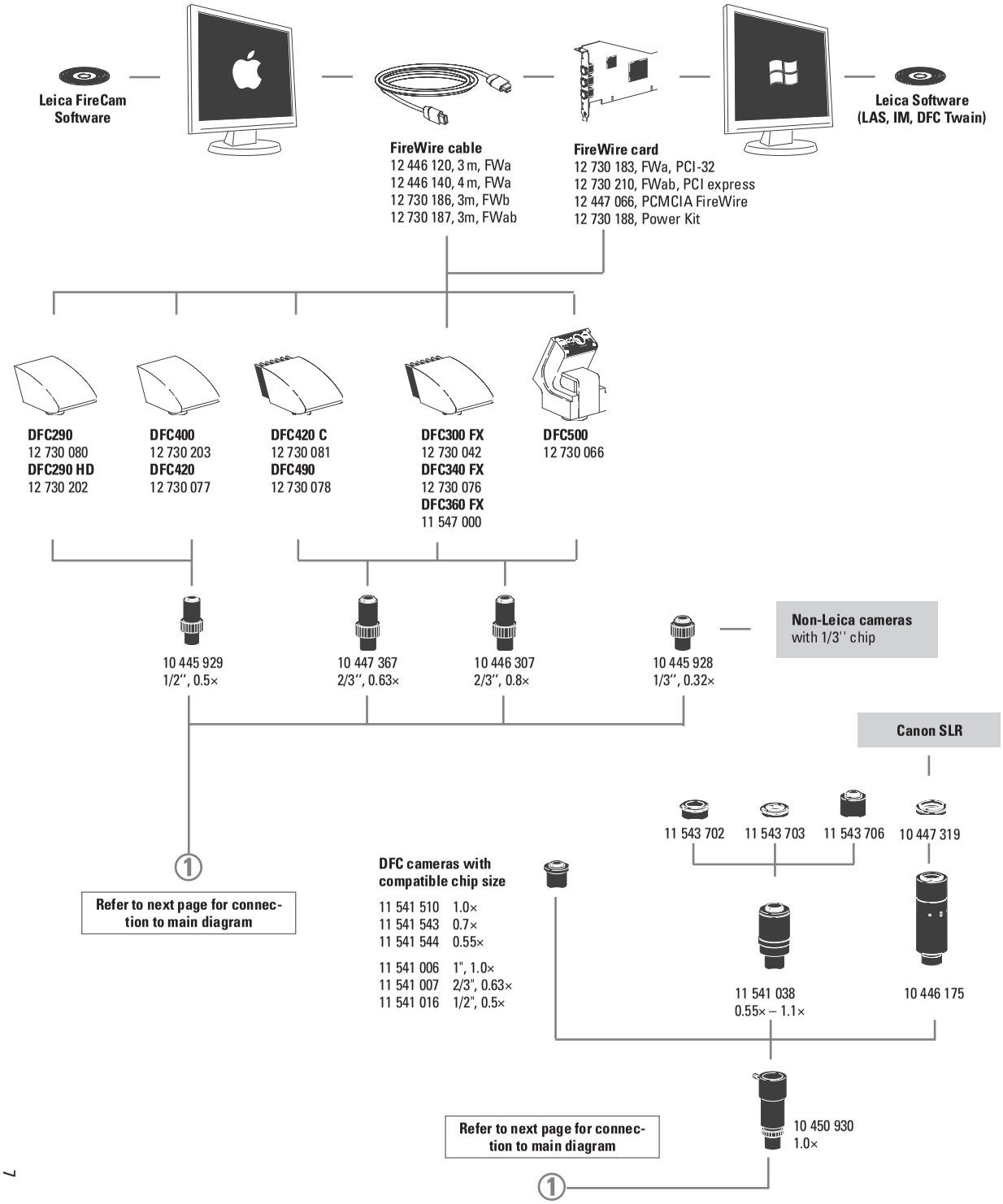

ARTICLE DESCRIPTIONS

Digital camera systems

12 730 080	Leica DFC290 camera kit
12 730 202	Leica DFC290 HD camera kit
12 730 203	Leica DFC400 camera kit
12 730 077	Leica DFC420 camera kit
12 730 081	Leica DFC420 C camera kit
12 730 078	Leica DFC490 camera kit
12 730 042	Leica DFC300 FX camera kit
12 730 076	Leica DFC340 FX camera kit
11 547 000	Leica DFC360 FX camera kit
12 730 066	Leica DFC500 camera kit

Digital camera system accessories

12 446 120	FireWire cable, FWa, 3 m, 6-pin to 6-pin
12 446 140	FireWire cable, FWa, 4 m, 6-pin to 6-pin
12 730 186	FireWire cable, 3 m, FWb, 9-pin to 9-pin
12 730 187	FireWire cable, 3 m, FWab, 6-pin to 9-pin
12 730 183	OHCI FireWire PCI32 card, FWa
12 730 210	OHCI FireWire PCI express card, FWab
12 447 066	Laptop PCMCIA FireWire interface card for FWa
12 730 188	Laptop power kit, for use with 4-pin or unpowered 6-pin FireWire ports

Photo tubes and C-mounts

11 543 702	B-mount head 1× for TV optics 0.5× HC
11 543 703	B-mount adapter for 2/3"
11 543 706	C-mount head 1× for TV optics 0.5× HC
11 541 038	Vario TV adapter 0.55–1.1×,
10 447 319	Adapter T2, Canon EOS
10 446 175	SLR projection lens 2.5, with T2 thread, for use with single-lens reflex cameras on video/phototubes
11 541 006	1× C-mount adapter for 1" CCD cameras
11 541 007	0.63× C-mount adapter for 2/3" CCD cameras
11 541 016	0.5× C-mount adapter for 1/2" CCD cameras
11 541 510	1.0× C-mount adapter for 1" CCD cameras
11 541 543	0.7× C-mount adapter for 2/3" CCD cameras
11 541 544	0.55× C-mount adapter for 1/2" CCD cameras
10 445 928	0.32× video objective with C-mount for 1/3" CCD cameras for video/phototubes 10 445 924, 10 446 229, 10 446 197, 10 445 929 0.5× video objective with C-mount for 1/2" CCD cameras, for video/phototubes 10 445 924, 10 446 229
10 445 929	0.5× video objective with C-mount for 1/2" CCD cameras
10 447 367	0.63× video objective
10 446 307	0.8× video objective with C-mount for CCD cameras
10 445 930	1× video/photo objective for video/phototubes (10 445 924, 10 446 229, 10 446 197) Note: The 1× video/photo objective can also be used with the video/phototube AS (10 447 204) and the video/phototube A (10 447 128).

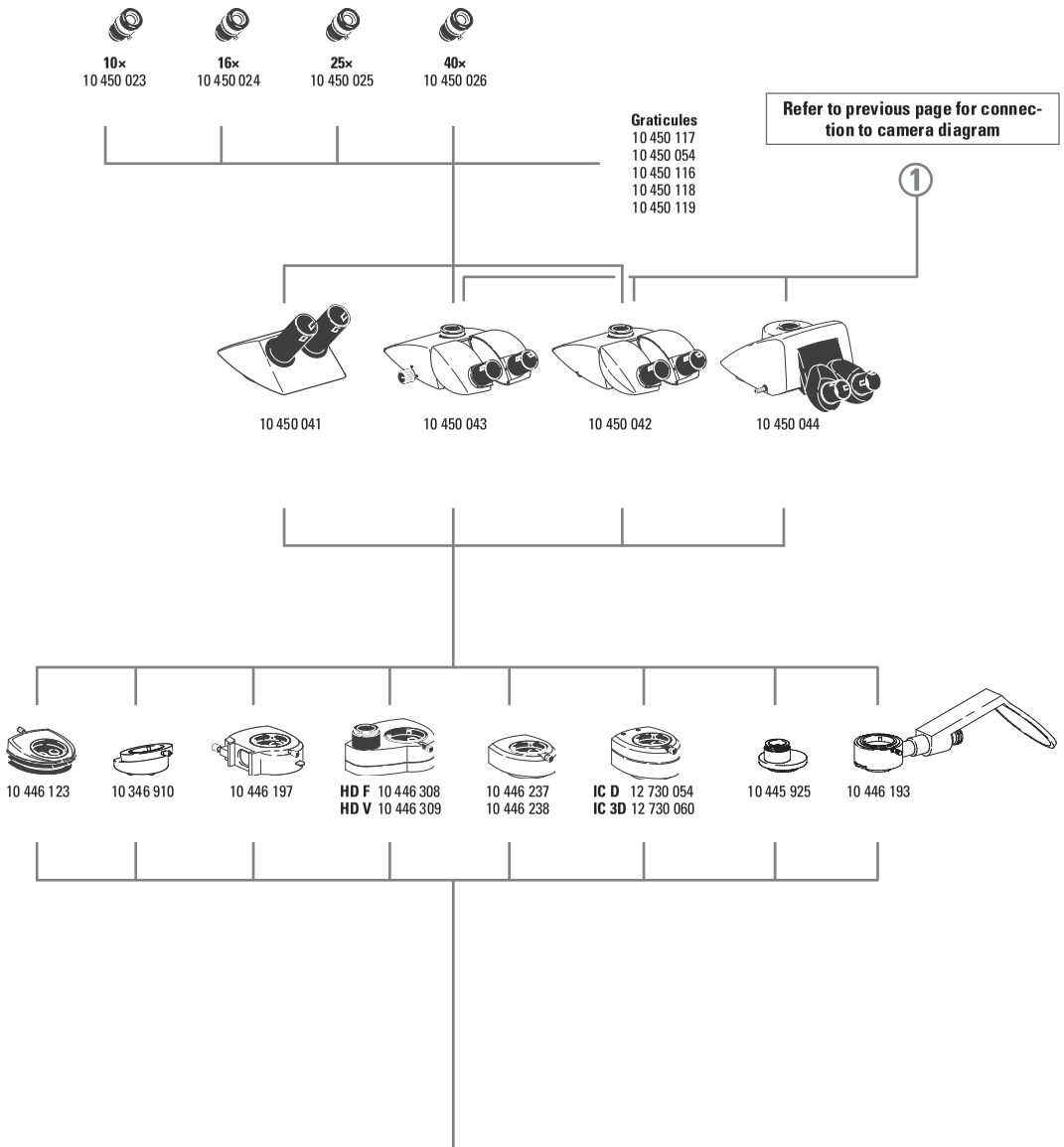

Eyepieces and tubes

10 450 196 Replacement eyecups for wide-field eyepieces for persons wearing glasses
10 450 023 Wide-field eyepieces for spectacle wearers 10×/23, distortion-free, dioptric correction, with eyecups*
10 450 024 Wide-field eyepieces for spectacle wearers 16×/15, distortion-free, dioptric correction, with eyecups*
10 450 025 Wide-field eyepieces for spectacle wearers 25×/9.5, distortion-free, dioptric correction, with eyecups*
10 450 026 Wide-field eyepieces for spectacle wearers 40×/6, distortion-free, dioptric correction, with eyecups*

* replaceable

10 450 117 Graticule, 10 mm / 0.1 mm
10 450 054 Graticule for M-series with encoding
10 450 116 Graticule, 5 mm / 0.05 mm
10 450 118 Graticule, 100 scale intervals / 0.001"
10 450 119 Graticule, crosshair

10 450 041 Inclined binocular tube, 45° viewing angle
10 450 042 Trinocular video/phototube 50%, 30° viewing angle
10 450 043 Trinocular video/phototube 100%, 30° viewing angle
10 450 044 Trinocular video/phototube 100%, 5°–45° viewing angle

10 446 123 ErgoWedge® 5°–25°
10 346 910 ErgoWedge® ±15
10 446 197 Video/phototube HD-50
10 446 308 Video/phototube HD-F, 50%, 50%
10 446 309 Video/phototube HD-V, 100%, 50%, 50%, 100%
10 446 237 Leica IC A video module with integrated CCD and camera control, PAL
10 446 238 Leica IC A video module with integrated CCD and camera control, NTSC
12 730 054 Leica IC D camera kit
12 730 060 Leica IC 3D camera kit

10 445 925 Video/photo tube A
10 446 193 Drawing tube

Zoom systems and accessories

10 450 038 Leica M165 FC, 16.5:1 zoom, apochromatically corr., TripleBeam™, elect. encoded, integrated filter system, man. UV shutter, UV protection screen, man. double-iris diaphragm (encoded)
10 450 040 Leica M205 FA, 20.5:1 zoom, apochr. corr., motorized, with FusionOptics™ and TripleBeam™, mot. & elect. encoded filter system, auto UV shutter, UV protection screen, mot. double-iris diaphragm, FIM·

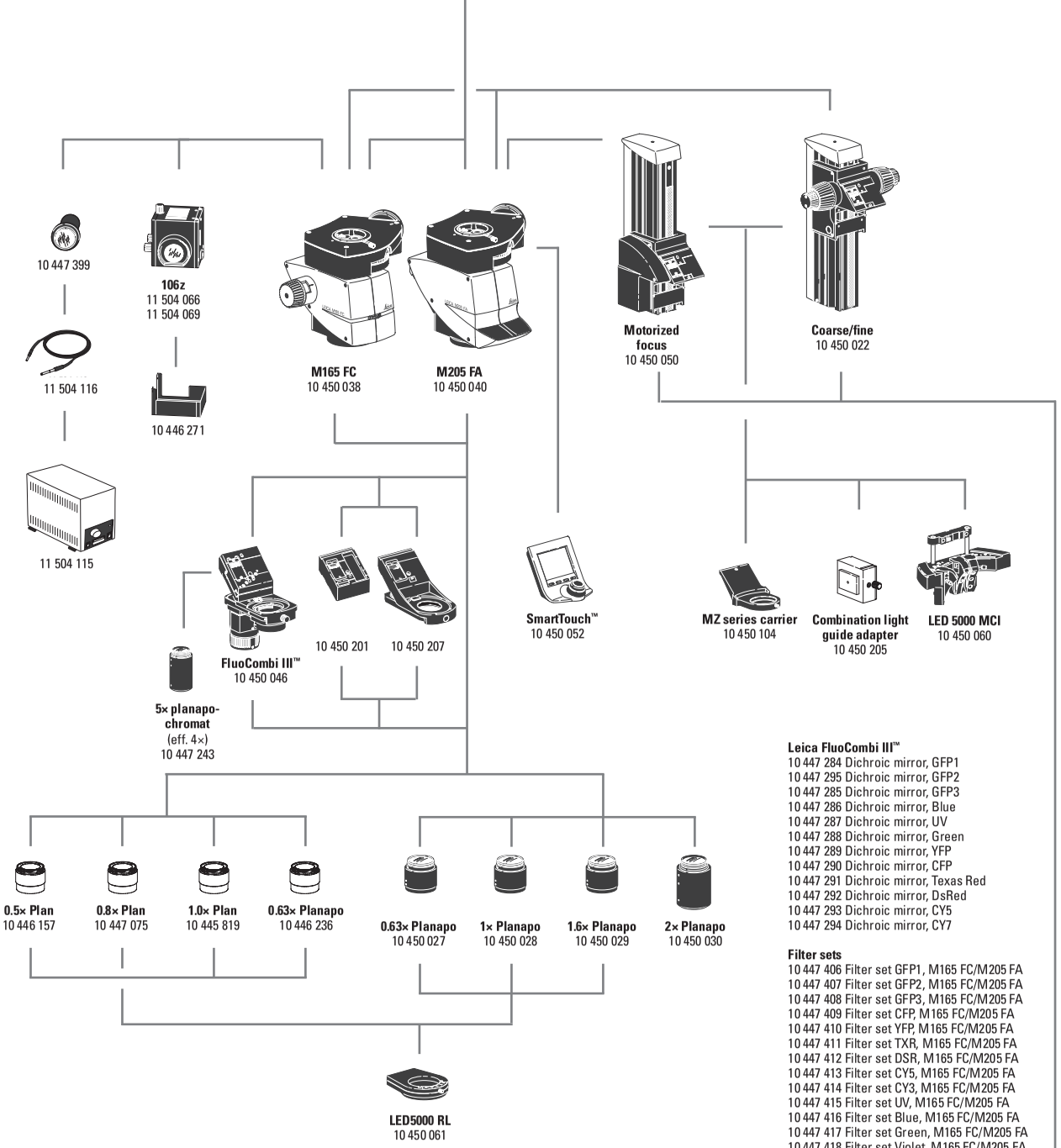

Leica FluoCombi III™
10 447 284 Dichroic mirror, GFP1
10 447 295 Dichroic mirror, GFP2
10 447 285 Dichroic mirror, GFP3
10 447 286 Dichroic mirror, Blue
10 447 287 Dichroic mirror, UV
10 447 288 Dichroic mirror, Green
10 447 289 Dichroic mirror, YFP
10 447 290 Dichroic mirror, CFP
10 447 291 Dichroic mirror, Texas Red
10 447 292 Dichroic mirror, DsRed
10 447 293 Dichroic mirror, CY5
10 447 294 Dichroic mirror, CY7

Filter sets
10 447 406 Filter set GFP1, M165 FC/M205 FA
10 447 407 Filter set GFP2, M165 FC/M205 FA
10 447 408 Filter set GFP3, M165 FC/M205 FA
10 447 409 Filter set CFP, M165 FC/M205 FA
10 447 410 Filter set YFP, M165 FC/M205 FA
10 447 411 Filter set TXR, M165 FC/M205 FA
10 447 412 Filter set DSR, M165 FC/M205 FA
10 447 413 Filter set CY5, M165 FC/M205 FA
10 447 414 Filter set CY3, M165 FC/M205 FA
10 447 415 Filter set UV, M165 FC/M205 FA
10 447 416 Filter set Blue, M165 FC/M205 FA
10 447 417 Filter set Green, M165 FC/M205 FA
10 447 418 Filter set Violet, M165 FC/M205 FA

All filter sets are equipped with transponders. To ensure automatic filter detection with the M205 FA, please order the appropriate filter sets from Leica Microsystems.

10 450 207 Objective nosepiece for quickly changing two objectives
10 450 047 Microscope carrier AX with toggle feature for axial photography
10 450 201 Ergo-Intermediate™ adapter
10 450 104 Microscope carrier for MZ series optics carriers
10 450 046 FluoCombi III™, parfocal, parcentric objective nosepiece for parallax-free documentation

Objectives and optical accessories
10 446 157 0.5× planachromatic objective, working distance 135 mm
10 447 075 0.8× planachromatic objective, working distance 112 mm
10 445 819 1× planachromatic objective, working distance 59 mm
10 446 236 0.63× planapochromatic objective, working distance 97 mm
10 447 243 5× planapochromatic objective, working distance 19 mm
Use only with FluoCombi III™ with factor 0.8 = 4×

Planapochromatic objectives, parfocal
10 450 027 0.63× planapochromatic objective, working distance 67 mm, parfocal
10 450 028 1.0× planapochromatic objective, working distance 61.5 mm, parfocal
10 450 029 1.6× planapochromatic objective, working distance 30.5 mm, parfocal
10 450 030 2× planapochromatic objective, working distance 20.1 mm, parfocal

Illuminators
10 450 060 Leica LED5000 MCI™ (Multi Contrast Illumination): three adjustable illuminator arcs, each with three LEDs, for complete integration in the stereomicroscope; with Leica Application Suite, fully reproducible modes including automatic replacement of multiple illumination scenarios

10 450 061 Leica LED5000 RL – ring illuminator with ∅ 80 mm and 48 LEDs for complete integration in the stereomicroscope; with Leica Application Suite, fully reproducible modes including automatic replacement of multiple illumination scenarios

10 450 205 Combination light guide adapter for installation on the focusing column

11 504 066 Lamp housing 106 z, Hg 50W
11 504 069 Lamp housing 106 z, Hg 100W
10 446 271 Stray-light protection for lamp housing 105 z and 106 z
11 504 115 Light source EL6000
11 504 116 Light source EL6000
10 447 395 Light guide coupling 11 504 116 for EL6000

Incident and transmitted light bases
10 450 049 Incident light base
10 450 123 Transmitted light base TL ST
10 450 124 Transmitted light base BFDF
10 450 125 Transmitted light base TL RC™ for external cold light sources
10 450 126 Transmitted light base TL RCI™ with integrated halogen illumination

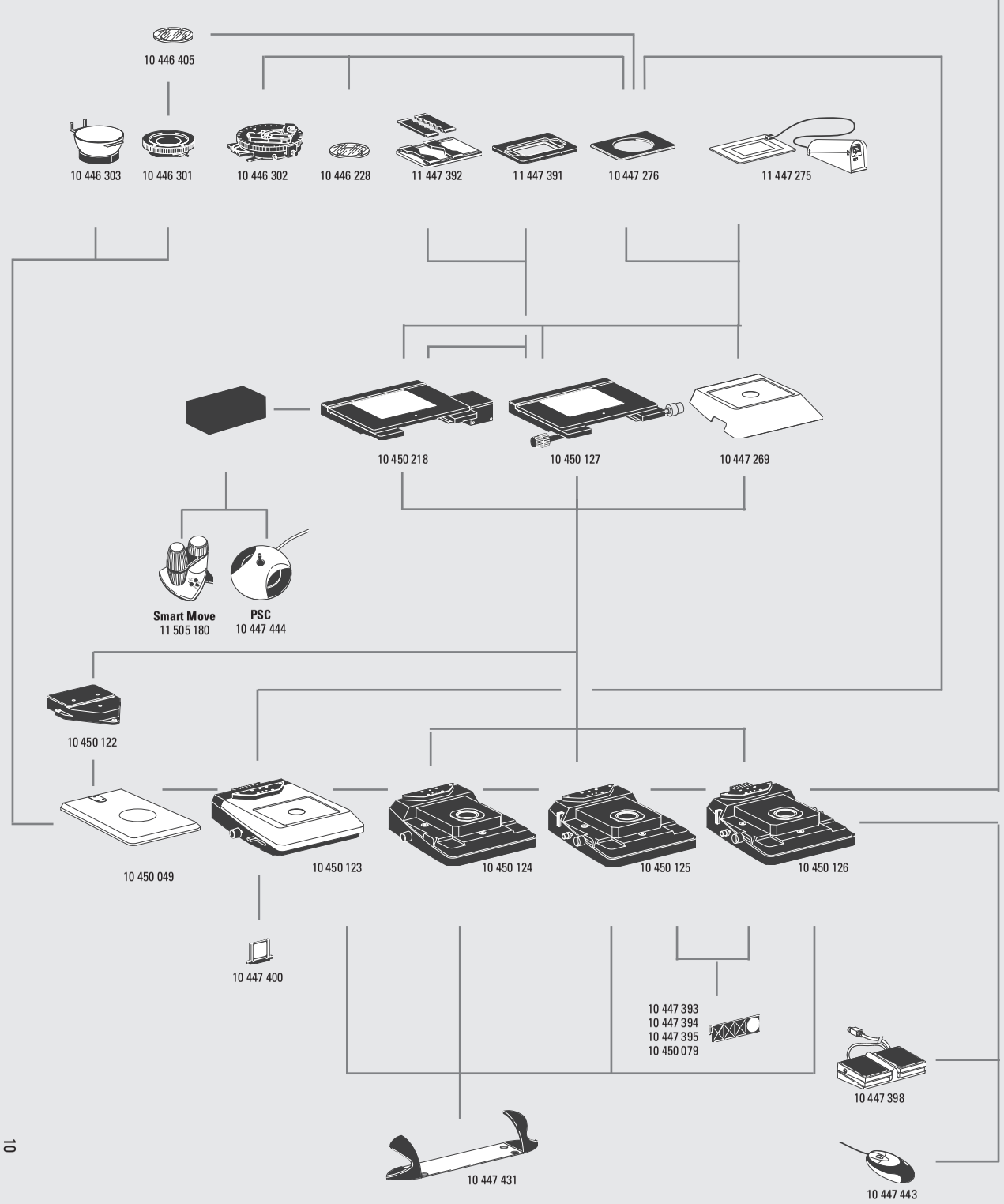

Stages

10 447 269 Standard stage for TL BFDF, TL RC™ and TL RCI™ transmitted-light bases
10 450 127 Leica IsoPro™ manual mechanical stage for TL BFDF, TL RC™, TL RCI™ transmitted light bases and incident light base (with adapter 10 450 137)
10 450 218 Leica IsoPro™ motorized mechanical stage for TL BFDF, TL RC™, TL RCI™ transmitted light bases and incident light base (with adapter 10 450 137)
10 450 122 Adapter between mechanical stage and incident light base 10 450 049

10 447 275 Leica MATS TL heating stage insert with control unit for TL bases
10 447 276 Adapter for stages with ∅120 mm
10 447 391 Stage for LifeOnStage accessories
10 447 392 Universal carrier for Petri dishes, specimen slides (up to four) etc.

10 446 301 Gliding stage, ∅120 mm
10 446 302 Polarization stage, ∅120 mm
10 382 130 Attachable mechanical stage for polarization stage
10 361 719 Sensitive-tint plate for Pol rotating stage
10 446 303 Cup stage, ∅120 mm
10 446 228 Glass stage plate with Pol, ∅120 mm
10 450 058 Stage plate, b/w for TL bases
10 450 059 Extra knobs for IsoPro™ manual mechanical stage

Focusing drive

10 450 022 Focusing drive, coarse/fine, with 431 mm profile column
10 450 050 Motorized focusing drive with 431 mm profile column

Filters

10 447 400 Daylight filter for TL ST base
10 447 394 BG38 filter for TL RC™/ RCI™ transmitted light base
10 447 395 UV filter for TL RC™/ RCI™ base
10 447 393 ND filter (neutral density filter) for TL RC™/ RCI™ base
10 450 079 Daylight filter for TL RCI™ base

Controls

10 447 443 Leica USB mouse, user-programmable five-button mouse for connection to the TL RCI™ transmitted light base or PC
11 505 180 Leica Smart Move control unit for Leica IsoPro™ motorized mechanical stage
10 447 444 Leica PSC control unit for Leica IsoPro™ motorized mechanical stage
10 450 052 SmartTouch™, external control unit with integrated touchscreen for status control and control of all settings and functions

Ergonomic accessories

10 447 431 Leica ErgoRest™ handrest for fatigue-free work

LED5000 MCI™

Dimensions

Dimensions in mm

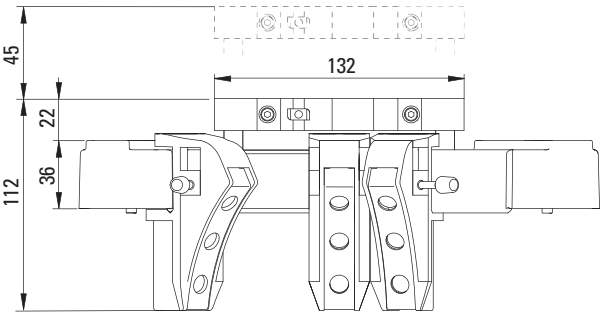

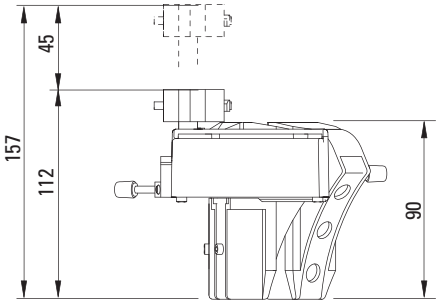

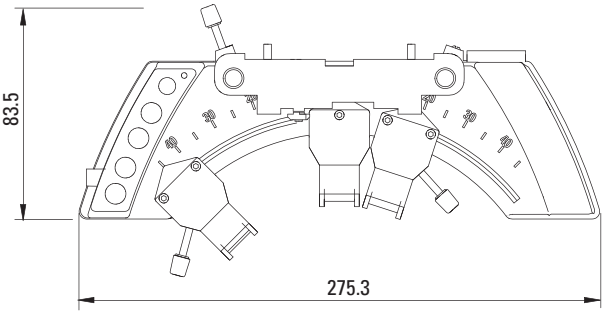

LED5000 RL

Dimensions

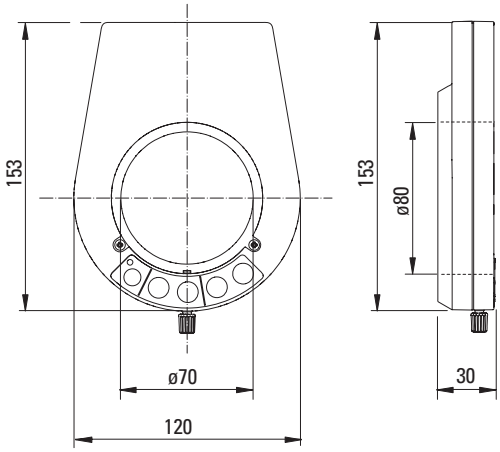

Leica MATS TL Heating Stage

Dimensions and article numbers

Dimensions in mm

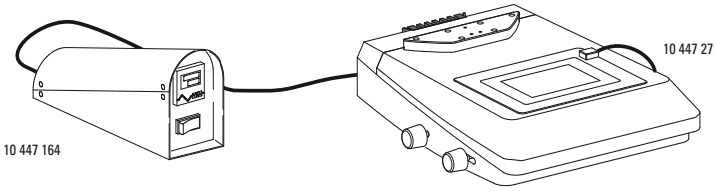

10 447 164 Control unit

10 447 275 Thermoplate for Leica M stereomicroscopes with TL ST, TL BFDF, TL RC™ or TL RCI™ transmitted light base

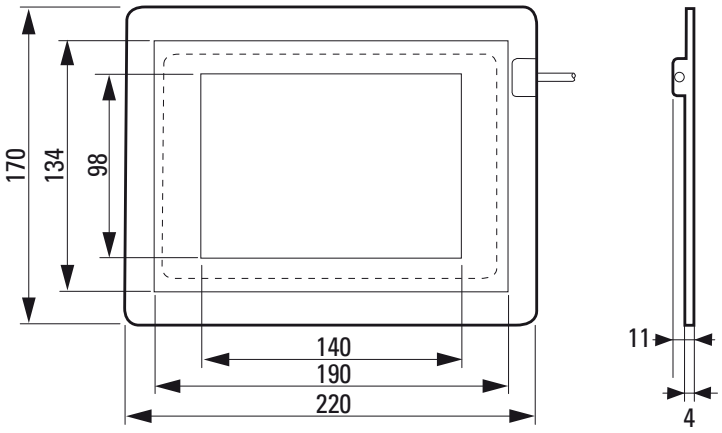

Leica M165 FC Dimensions

with TL ST transmitted light base and manual focus

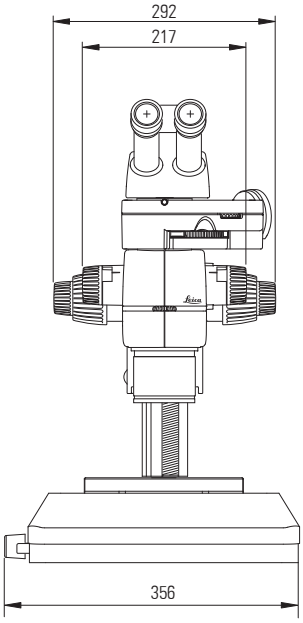

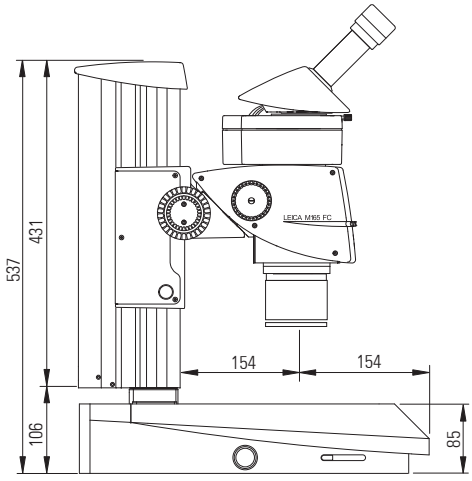

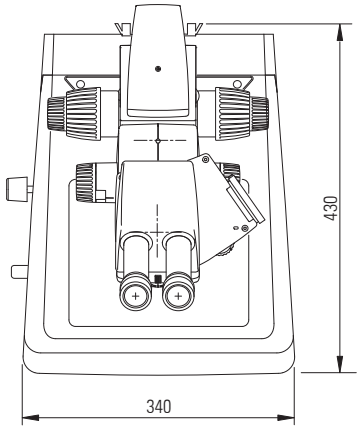

Leica M165 FC Dimensions

with TL RC™ transmitted light stand and manual focus

Dimensions in mm

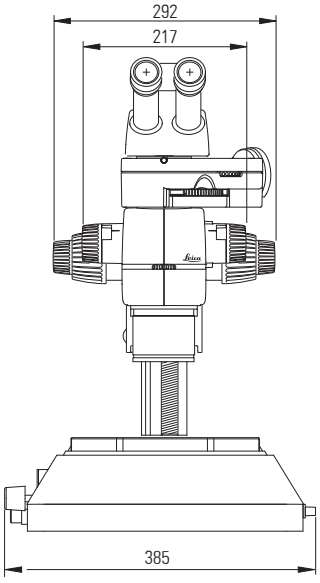

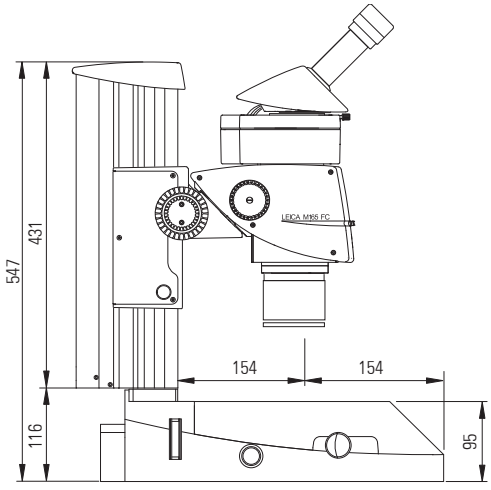

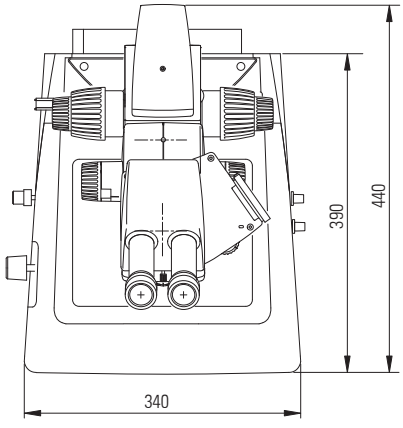

Leica M165 FC Dimensions

with TL RCI™ transmitted light stand, Leica IsoPro™ manual mechanical stage and manual focusing drive

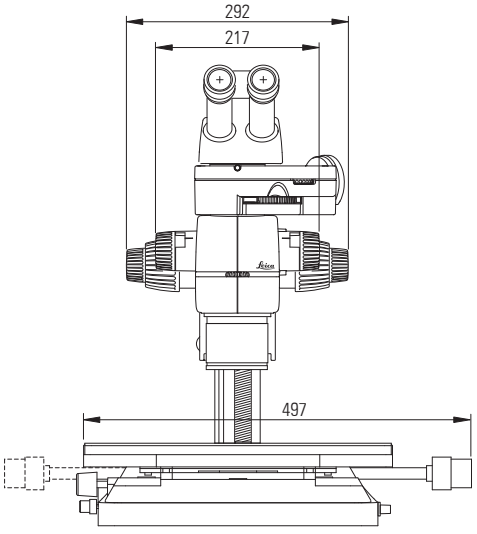

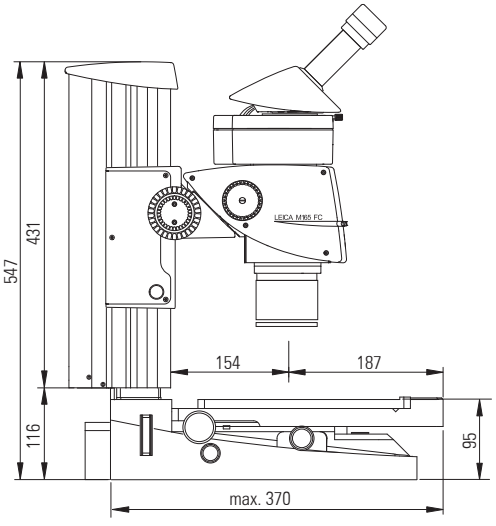

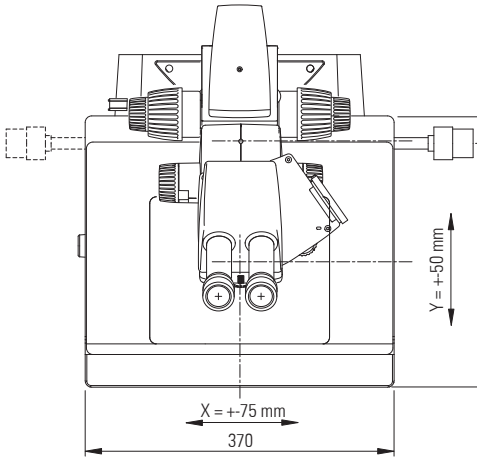

Leica M205 FA Dimensions

with TL BFDF transmitted light stand, ErgoTrinoc tube, DFC camera and motorized focusing drive

Dimensions in mm

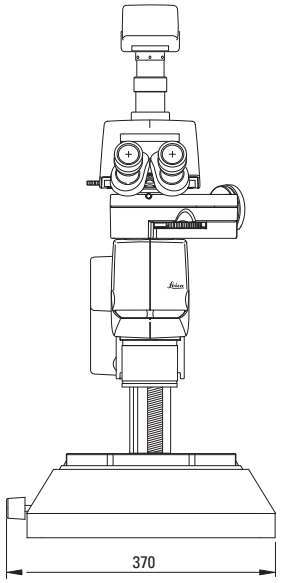

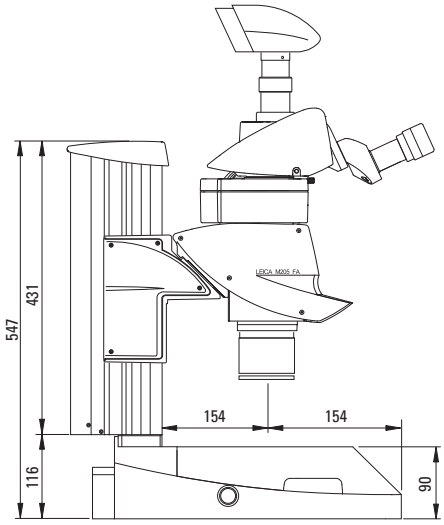

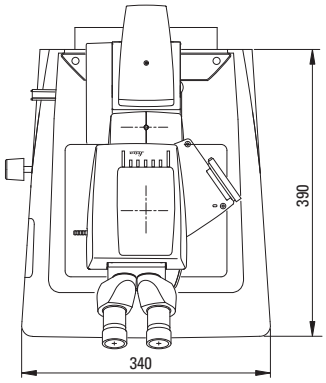

Leica M205 FA Dimensions

with TL RCI™ transmitted light stand, ErgoTrinoc tube, DFC camera and motorized focusing drive

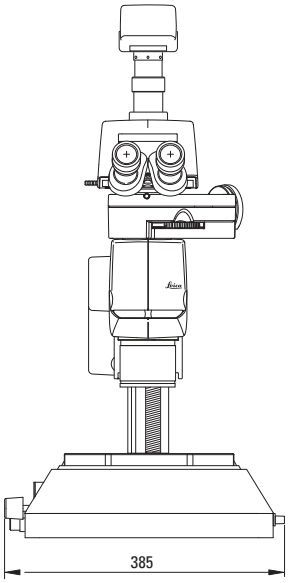

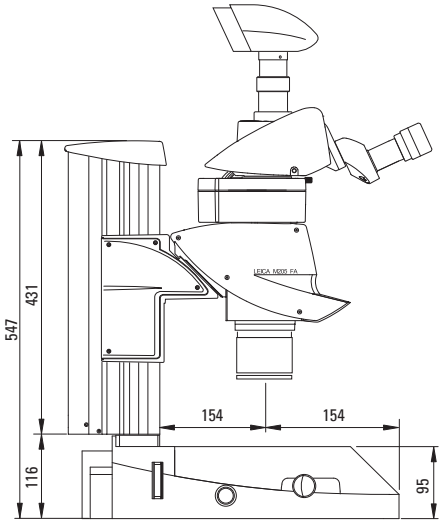

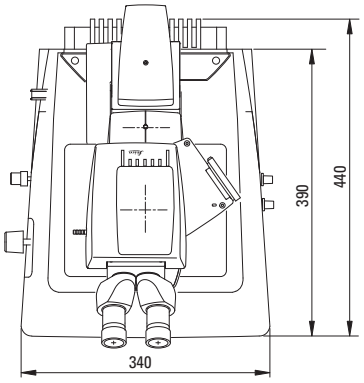

Leica M205 FA Dimensions

with TL RCI™ transmitted light stand, IsoPro™ mechanical stage, ErgoTrinoc tube, DFC camera and motorized focusing drive

Dimensions in mm

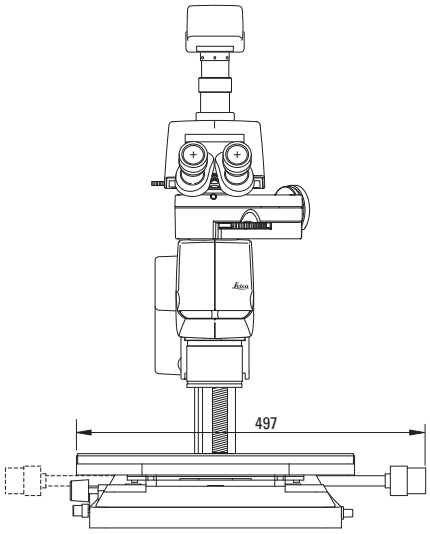

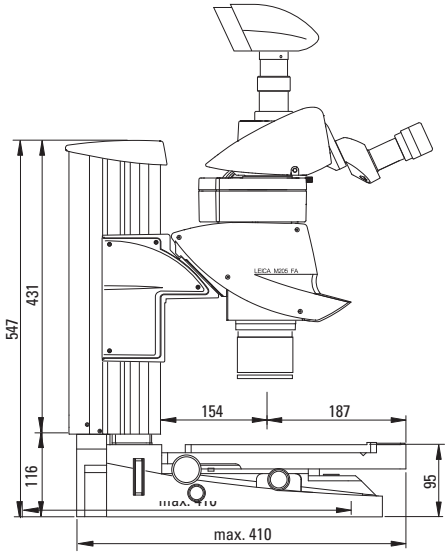

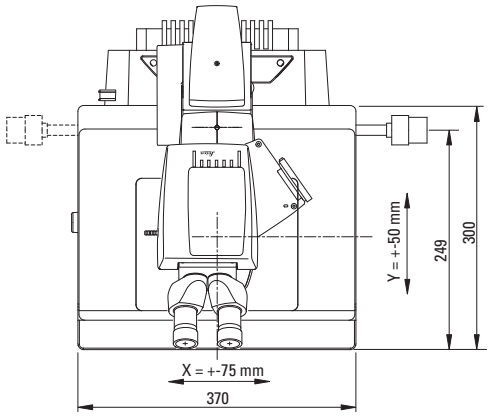

“With the user, for the user”
Leica Microsystems

Leica Microsystems operates globally in four divisions, where we rank with the market leaders.

• Life Science Division

The Leica Microsystems Life Science Division supports the imaging needs of the scientific community with advanced innovation and technical expertise for the visualization, measurement, and analysis of microstructures. Our strong focus on understanding scientific applications puts Leica Microsystems’ customers at the leading edge of science.

• Industry Division

The Leica Microsystems Industry Division’s focus is to support customers’ pursuit of the highest quality end result. Leica Microsystems provide the best and most innovative imaging systems to see, measure, and analyze the microstructures in routine and research industrial applications, materials science, quality control, forensic science investigation, and educational applications.

• Biosystems Division

The Leica Microsystems Biosystems Division brings histopathology labs and researchers the highest-quality, most comprehensive product range. From patient to pathologist, the range includes the ideal product for each histology step and high-productivity workflow solutions for the entire lab. With complete histology systems featuring innovative automation and Novocastra™ reagents, Leica Microsystems creates better patient care through rapid turnaround, diagnostic confidence, and close customer collaboration.

• Surgical Division

The Leica Microsystems Surgical Division’s focus is to partner with and support surgeons and their care of patients with the highest-quality, most innovative surgical microscope technology today and into the future.

The statement by Ernst Leitz in 1907, “with the user, for the user,” describes the fruitful collaboration with end users and driving force of innovation at Leica Microsystems. We have developed five brand values to live up to this tradition: Pioneering, High-end Quality, Team Spirit, Dedication to Science, and Continuous Improvement. For us, living up to these values means: **Living up to Life**.

Active worldwide

Australia:	North Ryde	Tel. +61 2 8870 3500	Fax +61 2 9878 1055
Austria:	Vienna	Tel. +43 1 486 80 50 0	Fax +43 1 486 80 50 30
Belgium:	Groot Bijgaarden	Tel. +32 2 790 98 50	Fax +32 2 790 98 68
Canada:	Richmond Hill/Ontario	Tel. +1 905 762 2000	Fax +1 905 762 8937
Denmark:	Herlev	Tel. +45 4454 0101	Fax +45 4454 0111
France:	Nanterre Cedex	Tel. +33 811 000 664	Fax +33 1 56 05 23 23
Germany:	Wetzlar	Tel. +49 64 41 29 40 00	Fax +49 64 41 29 41 55
Italy:	Milan	Tel. +39 02 574 861	Fax +39 02 574 03392
Japan:	Tokyo	Tel. +81 3 5421 2800	Fax +81 3 5421 2896
Korea:	Seoul	Tel. +82 2 514 65 43	Fax +82 2 514 65 48
Netherlands:	Rijswijk	Tel. +31 70 4132 100	Fax +31 70 4132 109
People’s Rep. of China:	Hong Kong	Tel. +852 2564 6699	Fax +852 2564 4163
Portugal:	Lisbon	Tel. +351 21 388 9112	Fax +351 21 385 4668
Singapore		Tel. +65 6779 7823	Fax +65 6773 0628
Spain:	Barcelona	Tel. +34 93 494 95 30	Fax +34 93 494 95 32
Sweden:	Kista	Tel. +46 8 625 45 45	Fax +46 8 625 45 10
Switzerland:	Heerbrugg	Tel. +41 71 726 34 34	Fax +41 71 726 34 44
United Kingdom:	Milton Keynes	Tel. +44 1908 246 246	Fax +44 1908 609 992
USA:	Bannockburn/Illinois	Tel. +1 847 405 0123	Fax +1 847 405 0164

and representatives in more than 100 countries

In accordance with the ISO 9001 certificate, Leica Microsystems (Switzerland) Ltd, Industry Division, has at its disposal a management system that meets the requirements of the international standard for quality management. In addition, production meets the requirements of the international standard ISO 14001 for environmental management.

10LSM11020EN • © Leica Microsystems (Switzerland) Ltd • CH-9435 Heerbrugg, 2008 • Printed in Switzerland – IV/2008 – RDV – Illustrations, descriptions and technical data are not binding and may be changed without notice.

www.leica-microsystems.com

Leica
MICROSYSTEMS