S-5200 Field Emission Scanning Electron Microscope

Service Manual

Please read through this manual carefully before using the instrument.
• Before using the instrument, read the safety instructions and precautions carefully. • Keep this manual in a safe place nearby so it can be referred to whenever needed.

Part No. 595-8030

Table of Contents

This page intentionally left blank.

1 Introduction

1.1 Description of the Instrument

1.1.1 Overview

The scanning electron microscope (SEM) is used in diverse fields, from research and development to quality control in manufacturing operations. SEMs with advanced capabilities are essential for the observation of ultra-microstructures in the fields of electronics, functional materials, thin-films and other materials science fields, as well as in biotechnology, such as yeasts and pharmaceuticals. With the increasing availability and advances in personal computers (PC), there has been increasing importance of SEM operation under a Graphical User Interface (GUI) environment, of the digitalization of high-definition image data, and of data management through the use of networks.

To meet these needs, Hitachi Instruments has developed an ultra-high-resolution FE-SEM, the S-5200.

Incorporating the latest in electronic optical technology and PC control systems, the S-5200 offers a substantial enhancement of the capabilities of the previous model, the S-5000, while at the same time achieving both advanced capabilities and ease of operation, including SEM operation under a GUI environment, high-definition image recording, and networking capabilities.

The external view of the S-5200 SEM is shown in **Figure 1-1**.

Figure 1-1: S-5200 Scanning Electron Microscope External View

1.1.2 Features

As critical elements for high-resolution observations, the S-5200 incorporates significant improvements in (1) secondary electronic image resolution, (2) signal detection, (3) contamination, and (4) vibration tolerance (floor vibrations) (compared with the S-5000). As such, it is a high-resolution, high-operability in-lens SEM with the following features:

Achieving the Highest Resolution in the World with a Low Accelerating Voltage

At 1 kV, the S-5200 guarantees a secondary electronic image resolution of 1.8 nm.

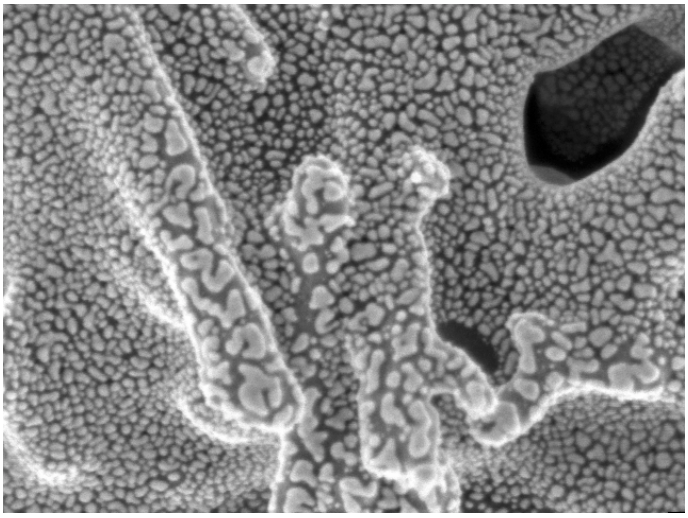

Figure 1-2: Secondary Electronic Image Resolution (Accelerating voltage: 1 kV, Magnification: 150,000)

Guaranteeing the Highest Resolution in the World at a High Accelerating voltage

At 30 kV, the S-5200 guarantees a secondary electronic image resolution of 0.5 nm.

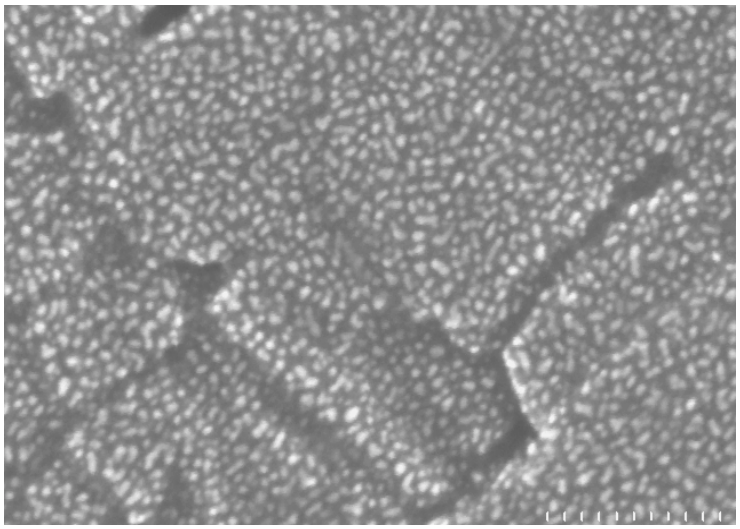

Figure 1-3: Secondary Electronic Image Resolution (Accelerating voltage: 30 kV, Magnification: 600,000)

Achieving Nanometer-level Observations at a Practical Accelerating voltage

Accelerating voltages ranging from 2 kV to 10 kV are frequently used in the observation of cross-sectional profiles of semiconductors. The S-5200 makes high-resolution observations possible at such practical usage conditions. **Figure 1-4** shows the relationship (calculated values) between the attainable resolution of the S-5200 and the accelerating voltage. The "specimen height" shown in **Figure 1-4** denotes the height of the observation surface based upon the standard specimen position (the X-ray analysis position). The maximum accelerating voltage that can be used under the condition of specimen height = 1.5 mm is 10 kV (**Figure 1-5**).

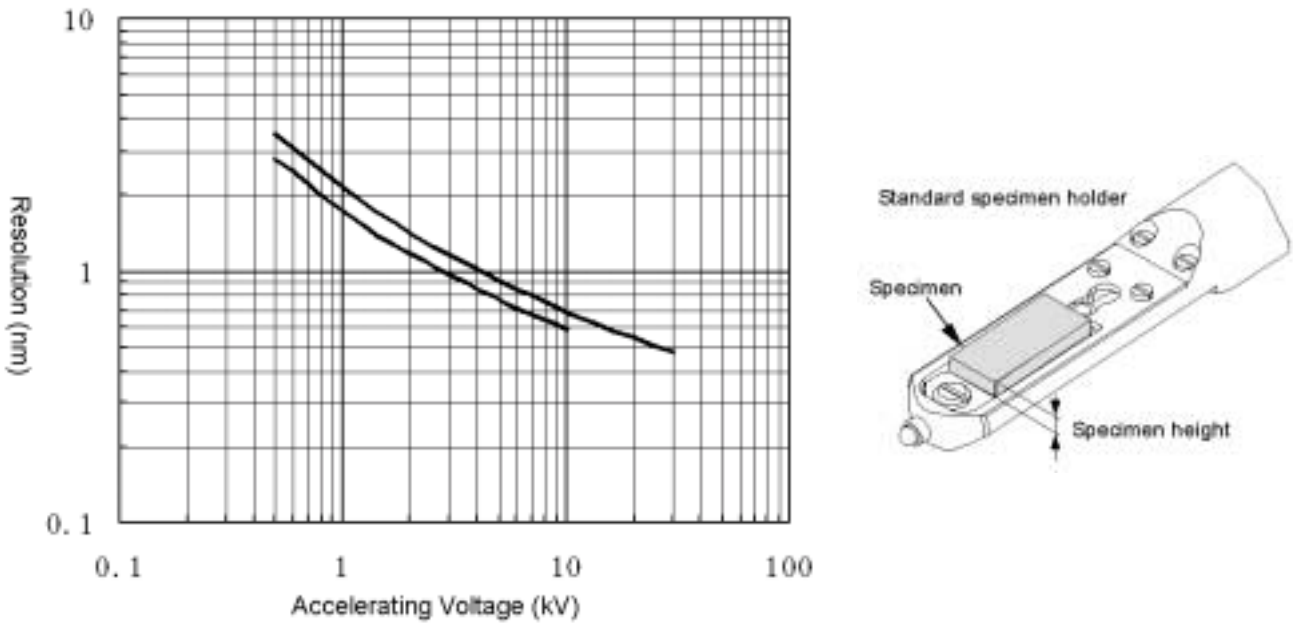

Figure 1-4: Relationship (Calculated Values) between Resolution and Accelerating voltage for the S-5200

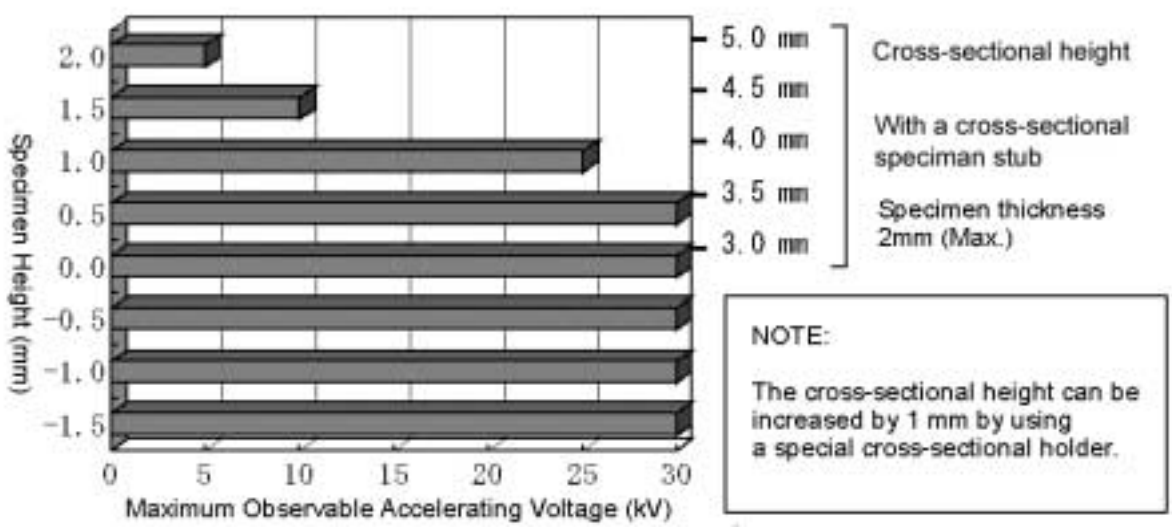

Figure 1-5: Relationship between Specimen Height and Maximum Observable Accelerating voltage

Quick-style Standard Specimen Holder without a Fastening Screw

For setting a specimen stub on the specimen holder, the conventional method (S-5000) involves fixing a holding fixture with a fastening screw after the specimen stub is aligned. At most semiconductor customer sites, however, the specimen height is generally constant, so that the specimen stub is always fixed at the same position on the specimen holder. In view of this fact, the S-5200 features a quick specimen stub fixing method that does not use screws and that eliminates the specimen stub alignment step (**Figure 1-6**).

Further, because the S-5200 uses a focusing range that is a 3.5 mm continuous area, you need not be super-accurate in setting a specimen height. (You still need to be careful not let the specimen stick out from the specimen holder.)

With the S-5200, you can set the specimen stub on the specimen holder by dropping the specimen stub onto the specimen stub carrier on the specimen holder and moving a spring-actuated specimen stub attachment latch.

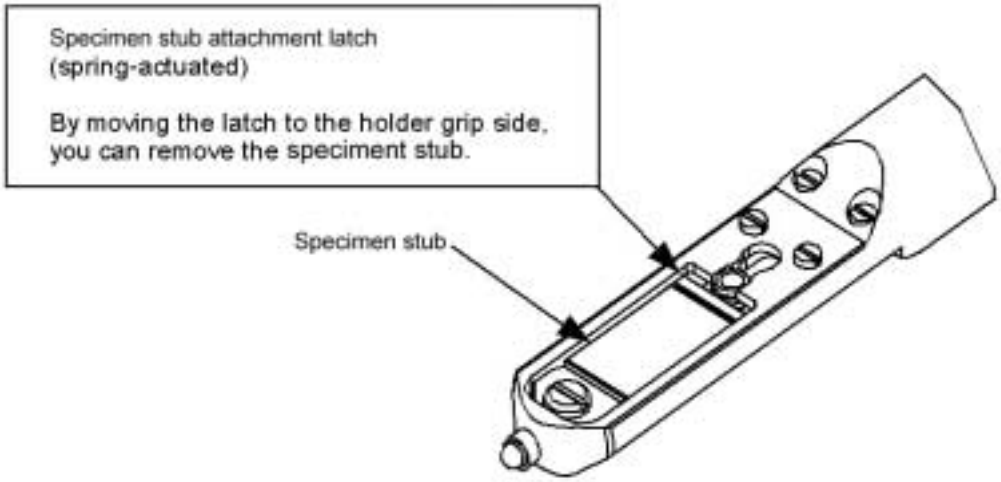

Figure 1-6: Tip of the Standard Specimen Holder

The Standard Holder and the Cross-sectional Holder for the S-5000 can be used with Some Restrictions.

Specimen holders for the S-5000 can be used on the S-5200 with the following cautionary notes:

- The STD position (on the same surface as the holder axis) for the S-5000 corresponds to a *Specimen Height: -1.5 mm* position on the S-5200. (At this position, eucentric tilting cannot be performed.)
- Specimen tilt angles are subject to restrictions. Depending on the type of holder used, the following specimen tilt angles can be supported:

  Standard specimen holder for the S-5000: maximum tilt angle ± 15º

  Cross-sectional specimen holder for the S-5000: maximum tilt angle ± 10º
- Because the S-5200 may require the tilting of a specimen for side take-off during X-ray analysis, specimen holders designed for the S-5000 may not operate properly for X-ray analysis purposes (due to a tilt restriction).
- Some S-5000 specimen holders cannot be used on the S-5200. If you encounter specific problems in this regard, please contact Hitachi Instruments.

Highly Efficient Detection of Secondary Electrons based on the ExB Method that does not produce Axial Deviations

The S-5200 incorporates an ExB secondary electron detector that is field-proven as an "Upper" detector used with the S-4500/S-4700, which achieves the highly efficient detection of secondary electrons in a manner that does not produce axial deviations.

Control over the Detection Ratio between SE Signals and BSE Signals by means of a Secondary Electron Detector

The secondary electron detector for the S-5200 can detect SE and BSE signals at a variable ratio, which produces an optimum image according to a given application or objective.

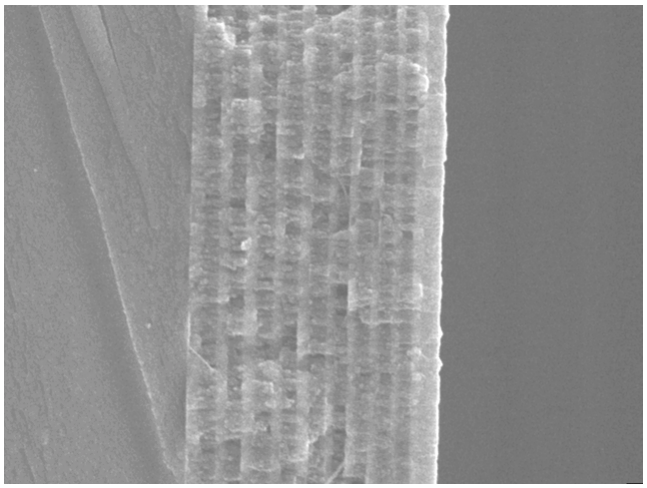

Secondary Electron Image

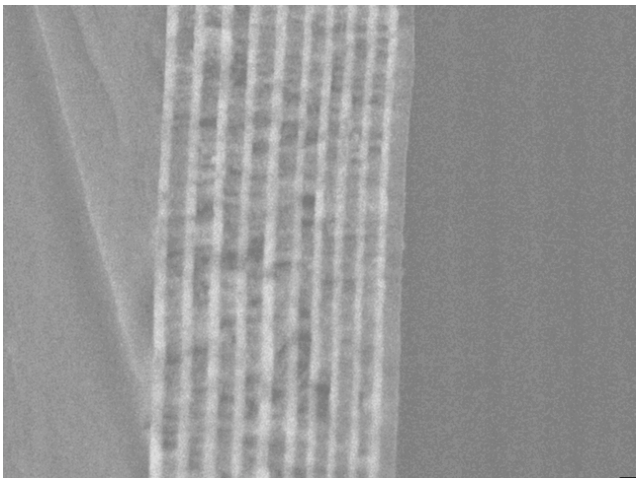

An image using Backscattered Electron Information

Specimen: A multi-layer film on glass; Accelerating voltage: 5 kV; Magnification: 50,000

Figure 1-7: Signal Control Function of the Secondary Electron Detector

Low-acceleration Reflection Electron Detector (Optional)

The S-5200 can accept an optional low-acceleration reflection electron detector capable of detecting low-acceleration, reflected electrons that are generated at a high angle from the specimen. The reflection electron detector can achieve relatively high detection sensitivity for reflected electrons with an energy level of 5 kV or less. Reflected electron signals can be mixed with secondary electron signals at a variable ratio.

Figure 1-8 shows an example of the application of the low-acceleration reflection electron detector to a semi-spherical capacitor insulator for DRAM.

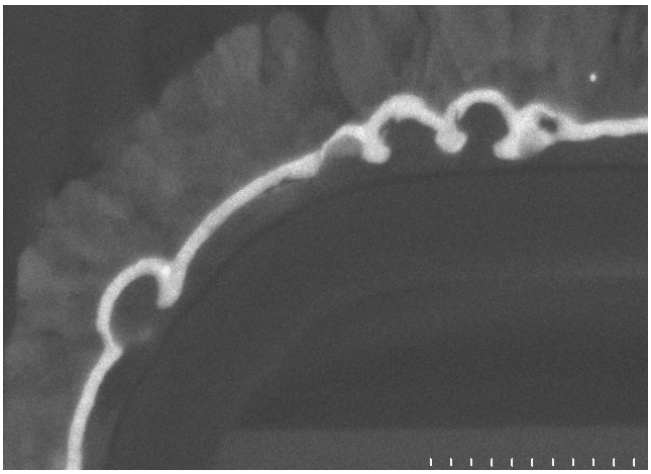

Low-acceleration reflection electron image (2 kV)
(S-5200 + low-acceleration reflection electron detector)

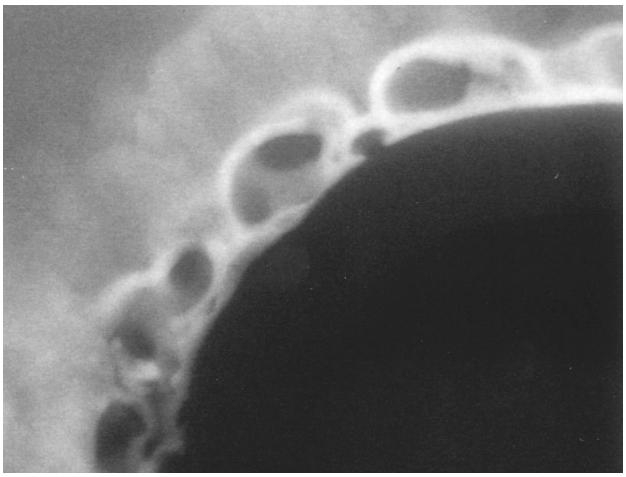

High-acceleration reflection electron image (10 kV)
(S-5200 + low-acceleration reflection electron detector)

Specimen: DRAM cross-section (semi-spherical capacitor insulator) Magnification: 200,000 0.2µm

Figure 1-8: Low-acceleration Reflection Electron Image and High-acceleration Reflection Electron Image

Minimum Dose through the use of Electrostatic High-speed Beam Blanking

Viewing specimens sensitive to contamination, such as cross-sectional observations of a semiconductor often reveals the presence of contamination residues in the upper left portion or the left edge of the resulting SEM image. This problem results when the beam stops for a fixed time at the starting point of scanning signals (X, Y), due to the fact that in power supply-synchronized beam scanning, the timing of scanning is synchronized with the power frequency. In specimens sensitive to contamination, such as semiconductor cross-sectional specimens, a stationary beam over the specimen can result in contamination deposition, which can leave contamination residues in the upper left portion or the left edge of the resulting SEM image. To prevent such contamination residues, the S-5200 incorporates an electrostatic high-speed beam blanking unit as a standard feature.

The high-speed beam blanking unit for the S-5200 blocks the beam when the beam becomes stationary at the starting point of scanning signals (X, Y), which eliminates the possibility of contamination residues in the upper left portion or the left edge of an SEM image.

The beam-blanking unit (electromagnetic system) for conventional systems (e.g., S-5000) blocks the beam only when the image is frozen; therefore, it cannot eliminate the contamination residues that are produced at the starting point of beam scanning.

Completely Dry Vacuum System through the use of a Turbo Molecular Pump and a Dry Pump (Scroll Pump)

A significant cause contributing to a reduction in throughput in the evaluation of semiconductor cross sections is contamination of the specimen. The S-5200 incorporates a completely dry evacuation system based on a turbo molecular pump (pumping rate: 270 L/s) and a dry pump (sales department-supplied) that facilitate the observation of cross sections without requiring a liquid nitrogen trap (contamination trap). Because a single dry pump implements the functions of two roughing vacuum pumps (oil rotation pumps) that are used in conventional systems, the S-5200 achieves improvements in both energy and space savings. Furthermore, when necessary, it is also possible to achieve further improvement in the level of vacuum attained in the specimen chamber by

configuring an optional tandem evacuation system, wherein a small turbo molecular pump (pumping rate: 50 L/s) is connected to the exhaust outlet for the main turbo molecular pump (pumping rate: 270 L/s) in a cascading fashion.

Further Reductions in Contamination through Optional Features

In observations that are susceptible to the effects of contamination (e.g., high magnification rate observations at a low accelerating voltage) and cryogenic observations, an effective contamination preventive measure can be achieved by chilling the area around the specimen with a liquid nitrogen trap. For this purpose, the S-5200 contains a built-in liquid nitrogen trap with a larger specimen envelope area than conventional traps in the objective lens unit. By installing an optional trap unit (a liquid nitrogen dewar) on the objective lens unit, you can provide a chilling trap function around the specimen. The optional trap unit is equipped with a special heater that removes gas from the trap.

Use of YAG-type Backscattered Electron Detector (option) without Restrictions on Specimen Tilt

Whereas in the conventional system (S-5000), the use of a YAG type backscattered electron detector restricted the available specimen tilt angle to ±8º, the S-5200 does not require such restrictions due to the fact that the YAG type backscattered electron detector is installed above the objective lens. Also, the S-5200 can simultaneously detect both reflected electrons and X-rays (the side take-off method).

Use of an (optional) Bright Field Aperture for Transmission Electron Images without Restrictions on Specimen Tilt

Whereas in the conventional system (S-5000), the installation of a bright field aperture for transmission electron image (STEM image) observations restricted the available specimen tilt angle to ±15º. The S-5200 does not require such restrictions due to a bright field aperture.

Improved Vibration Tolerance

Through the adoption of a high-performance internal anti-vibration mount and an improvement in the column structure, the S-5200 offers a threefold improvement in tolerance to floor vibrations. **Figure 1-9** shows the allowable floor vibration amplitude for the guaranteed resolution (magnification: 600,000) of the S-5200.

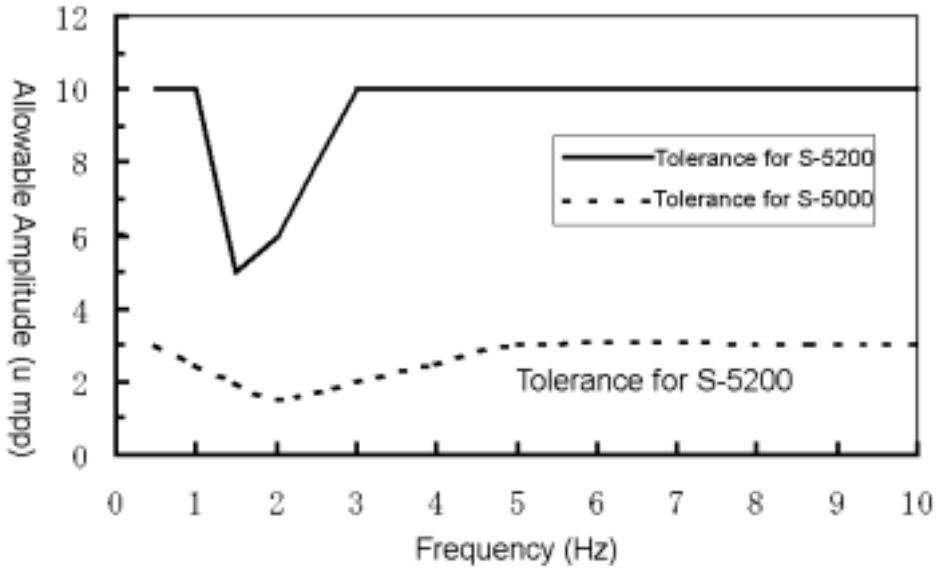

Figure 1-9: Floor Vibration Tolerance of the S-5200 (Horizontal Vibrations)

Achieving both the High-resolution Mode and the EDX Analysis Mode without requiring the Switching of Aperture Holes

Whereas the conventional system (S-5000) required the switching of aperture holes each time high-resolution observations and EDX analyses were repeated, which required the mechanical axis adjustment of the aperture. In the S-5200, as in the case of the S-4700, you can switch the high-resolution observation mode to the analysis mode that requires a large probe current simply by operating the mouse without touching the aperture, which eliminates the cumbersome mechanical axis adjustment. **Figure 1-10** shows probe current properties (changes with respect to condenser lens conditions) in the analysis mode and another operating mode (high-resolution observation mode).

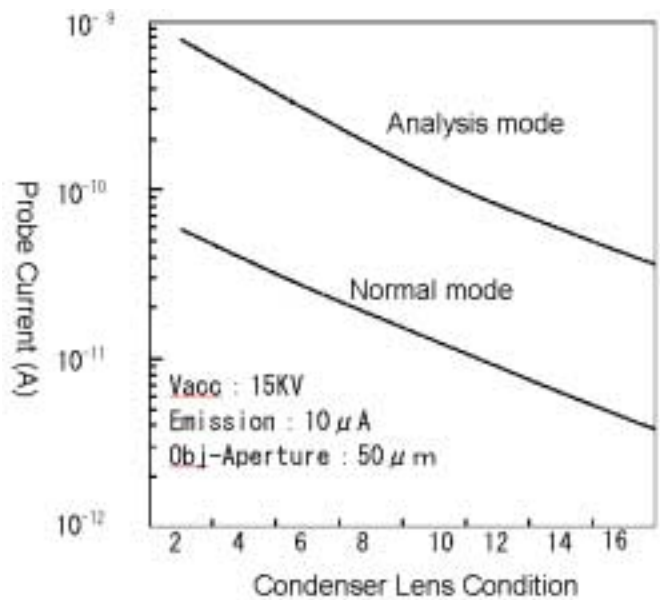

Figure 1-10: Relationship between Standard Probe Current and Condenser Lens Conditions

Evacuation System in the Energy-saving Operating Mode (Eco Mode)

With the S-5200, you can set the evacuation system so that you can start observations at a specified time on the following day by turning off the power for the system (except for the ion pump for the electron gun) after finishing image observations. For example, if you need to start your observations at 9:00 a.m. on the following morning after turning off the power at 6:00 p.m., you can set the evacuation system to run automatically so that a sufficiently high vacuum level will be attained by the specified time (9:00 a.m.) on the following morning. Even during a long vacation, the system can run in the energy conservation mode with the power for the evacuation system turned off during the vacation, in such a manner that image observations can be started upon the end of the vacation.

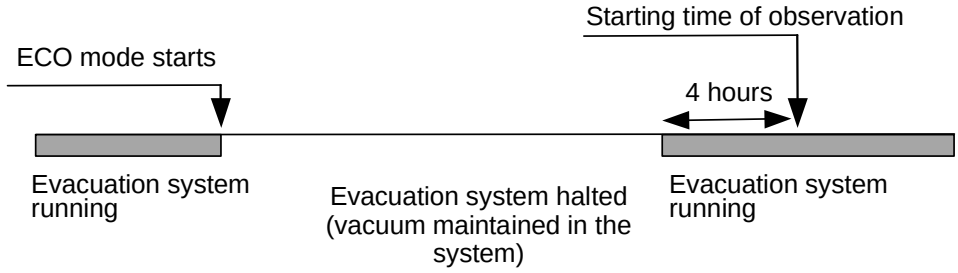

Figure 1-11: Operation of the Evacuation System in the Energy-saving Mode (Eco Mode)

Comfortable SEM Operation in GUI Environment

In the S-5200, SEM operation functions are built upon Windows NT that excels in network security and is an operating system of choice for many companies. For focusing and stigma adjustments, the S-5200 supports knob-based adjustments, as in conventional systems. For those of you who are familiar with the S-5000 and S-4000 SEM systems, the S-5200 can be provided with an optional operator panel that has the same functionality as the conventional systems.

Window Display of SEM Images

When looking for spots of interest on a specimen or searching for optimal values by varying the focus or image quality, you may want a SEM image display that faithfully follows changes in the knob. Ideally, such a SEM image display should be embedded in the window and overlaid on a suitable position on the monitor. Toward this end, Hitachi Instruments has developed special hardware and software that provide a comfortable operating environment.

Data File Storage and Re-reading of SEM Images

SEM images written to the image memory can be stored on the hard disk of your PC as BMP (also TIFF or JPEG) format files. As in the case of any other PC files, you can retrieve your SEM images at your convenience. Windows NT-compatible analytical systems

SEM Image Output through a Network Connection

By connecting the S-5200 to a network by Ethernet, you can easily transfer your data to an office PC or a network server PC. This eliminates the cumbersome offline transfer of SEM images through the use of floppy disks or MO media.

Compatibility with Off-the-shelf Image Processing Software Packages

You can easily create reports by purchasing Word and Excel that are widely used in the office environment, or Photoshop, PageMaker, and other DTP packages, and by using software that suites a particular task at hand. (Because some software that is installed on the PC can affect the operation of the SEM, please consult with Hitachi Instruments when contemplating the use of such software. Also, Hitachi Instruments recommends that you use the PC installed as part of the S-5200 system as a dedicated PC and use any off-the-shelf software by installing it on a separate PC.

Installing an EDX Analysis System

As in the case of conventional systems, an optional DBC can be connected to analytical systems available from different manufacturers. When using a Windows NT-compatible analytical system in conjunction with the S-5200, you can enhance ease of use by installing software (option: Hi-Mouse) that allows the sharing of the keyboard and the mouse between the two systems.

1.2 Specifications

1.2.1 Standard Specifications

Item	Specification	Notes
Secondary Electron Image Resolution	0.5 nm guaranteed (accelerating voltage:30 kV, sample height: 0.5 mm) 1.8 nm guaranteed (accelerating voltage: 1 kV, sample height: 1.5 mm) The resolution measurement specimen is used to measure the resolution.	
Magnification	Low magnification mode: 60 to 10k x (accuracy ± 10%) High magnification mode: 800 to 2,000k x (accuracy ± 10%)	
Electron Optics Electron source Accelerating voltage Lens system Stigmator coil Scanning coil Objective lens aperture Beam blanking Electric field of vision shift	 Cold-cathode field emission type electron source Butler lens assembled Anode heater assembled 0.5 to 30 kV (in 0.1 kV steps) 3-stage electromagnetic lens, reduction type 8-pole electromagnetic type (X, Y) 2-stage electromagnetic deflection type (HM mode) 1-stage electromagnetic deflection type (LM mode) 4 openings selectable type (finely adjustable) Aperture heating function assembled Electrostatic type (synchoronize scanning signal) Electromagnetic type (at image freezing) ± 5μm (when sample height = 0) **NOTE: The field of vision shift depends on the sampe height.**	
Detector	• Secondary electron detector (ExB method) • Upper backscattered electron detector (option) • YAG backscattered electron detector (option) • Transmitted electron detector (option) • Energy dispersive X-ray detector (option)	
Specimen stage Method Traverse range Specimen size Motor drive Specimen size	 Side entry method X= ± 3.5 mm, Y= ± 2.0 mm, T= ± 40°, Z= ± 0.3 mm X-axis, Y-axis, T-axis (Z-axis is manually operated.) Flat specimen (1): 5.0 mm x 9.5 mm x 3.5 mm (H) (max.) Flat specimen (2): 4.0 mm x 9.0 mm x 4.0 mm (H) (max.) Phase specimen (1): 2.0 mm x 8.0 mm x 5.0 mm (H) (max.)	
Vacuum System Evacuation control Vacuum pump	 Automatic pneumatic valve type Ion pump: 60L/sec x 1 ea, 20L/sec x 2	

Item	Specification	Notes
Vacuum gauge Ultimate vacuum Contamination reduction N_2 purge	Turbo molecular pump: 270L/sec x 1 (for main evacuation) Turbo molecular pump: 50 L/min (for Tadem [option]) Dry pump: ESDP12 x 1 (supplied by the customer) Penning gauge x 1, Pirani gauge x 2 (for evacuation control) Electron gun: < 1 x 10^{-7} Pa Specimen chamber (main evacuation section): <7 x 10^{-5} Pa Anti-contamination trap (Liquid nitrogen dewer is optional.) N_2 purge port (1/4 tapered internal thread) assembled. (Supplied pressure when using N_2 purge: 10 to 20 kPa)	
Safety Device	For protection against power failure, water failure, and vacuum failure	
Water Supply/Drain	Flow rate: 1.0 to 1.5 L/min (to cool objective lens) Pressure: 50 to 100 kPa Temperature: 10 to 20°C (variation: 0.5°C or less/10 min) Supply faucet (Rc 3/8 tapered internal thread) x 1 Drain port (20mm dia. or more) x 1 (on floor, natural drain)	
Accessory port	• For side take-off EDX x 1 • For faraday cup port (objective lens aperture) x 1 • For anti-contamination trap x 1 • For YAG backscattered electron detector x 1 • For upper backscattered electron detector x 1 • For STEM detector x 1 • For STEM aperture x 1	
User interface	Graphic user interface (GUI) on the PC monitor	
Scanning mode	Normal scan, Reduced area scan, Line scan, Photo scan, Spot position, Area analysis, Dual mag./split screen, Oblique	
PC	• Pentium III 450 MHz or higher • Memory 128 MB • HD 6.4 GB or more • Microsoft Windows NT	
Monitor	Viewing: 17" color CRT (1024 x 768 pixels) Photographing (option)	
Signal Processing	• Real-time image display • Automatic image control (brightness, contrast) • Gamma control • Differential image display (empahsizes the outline) • Reversal image display • Auto focus/auto stigmator • Photo in memory (2560 x 1920 pixels) • S/N improvement by averaging • Frame integration (1024 times max.) • Contrast conversion (image in memory) • 2-split screen image display	

Item	Specification	Notes
	• Color disolay (2 colors overlap display or dummy color) • Raster rotation/tilt compensation • CD measurement function (option)	
Scanning Speed	TV, Slow, 0.5 to 40 msec/frame for viewing mode 40 to 320 sec/frame for capture and image recording mode	
Electronic Image Shift	±15 µm (at WD = 12 mm)	
Frame Memory	• 640 x 480 pixel memory x 11 • 1280 x 960 pixel memory x 11 • 2560 x 1920 pixel memory x 2	
Image Display Size	• Standard (640 x 480 pixels x 1) • 2-split screen display (512 x 480 pixels x 2) • Full screen (1024 x 700 pixels x 1)	
Operating Condition Storage	Registerable	
Signal Selection	SE (secondary electron) signal BSE (Upper: backscattered electron, option) X-ray signal AUX signal (2 systems)	
Signal Control	(SE) / (SE [changeable] + BSE) function	
External Control	DBC (Digital Beam Control) (option) RS-232C communication interface (option) Keyboardd/mouse sharing function	
Data Display	Fully automatic data display (on monitor), Film no. Accelerating voltage, Magnification, Micron bar/Micron value Focus position (sample height value), Date/Time, Data display on image and in white on black screen selectable	
Data Input	Desired alphanumeric characters and symbols can be overlaid on image by using the keyboard.	
Network	Ethernet 10Base-T (option)	
Recording Device	Photographing CRT (option) 4 x 5 Polaroid film holder unit (option) 4 x 5 roll film holder unit (option) Various external memories (option)	
Dimensions/Weight	(Width) x (Depth) x (Height) (Weight)	
Column	890 1030 1700 (mm) 600 Kg	
Display	1050 880 1200 (mm) 260 Kg	
Power supply unit	520 600 905 (mm) 75 Kg	
Dry pump	252 400 336 (mm) 25 Kg	
Air compressor	230 400 550 (mm) 18 Kg	
Weight	200 180 160 (mm) 40 Kg	

NOTE: Due to the S2-93A modification, the height and weight of the power supply unit are 1443 mm and 145 Kg respectively.

NOTE: The dry pump is to be supplied by Hitachi Sales. The dimension/weight of ESDP12 is shown above.

1.2.2 Standard Configuration

- Column 1
- Display unit 1
- Power supply unit 1
- Compressor 1
- Standard tools 1 set
- Spares/consumables 1 set
- Instruction manual 1 set

NOTE: The photographing unit is optional and does not come standard.

NOTE: The dry pump does not come standard and is to be supplied by Hitachi sales.

1.2.3 Main Custom Accessories (Option)

Photographing Unit

- Photographing unit (5" photographing CRT, camera)
- 4 x 5 Polaroid film holder (1 exposure)
- 4 x 5 Polaroid film holder (8 exposures)
- 4 x 5 Polaroid film holder (10 exposures)
- 6 x 7 roll film holder

Detector

- Upper backscattered electron detector
- YAG type backscattered electron detector
- Transmitted electron image detector (with contrast aperture)
- Energy dispersive X-ray analyzer (EDX)
- Faraday cup (objective lens aperture section)

Contamination Removal

- Anti-contamination trap device
- Tandem evacuation system

Specimen Holder

- Cross sectional specimen holder
- STEM mesh specimen holder
- SH holder
- Specimen rotation holder
- 2-axis tilting specimen holder

Display

- CD measurement
- DBC (Digital Beam Controller) connector
- RS-232C communication interface
- Ethernet network interface
- Keyboard/mouse sharing function (Hi-Mouse)
- Video amplifier
- Photomultiplier power supply

Others

- Coolant circulator
- EDX system
- Autotransformer

1.3 Layout

1.3.1 Hardware

Standard Layout

The S-5200 standard layout is shown in **Figure 1-12**.

- The auto camera (★) and cooling water circulator (★) are options.
- The recommended dry pump is ESDP12. (The dry pump is supplied by Hitachi Sales.)
- For the CE/S2 structure, the height and weight for the power supply unit (★★) are 1443 mm and 145 kg respectively. The dry pump and compressor are to be obtained by the customer.

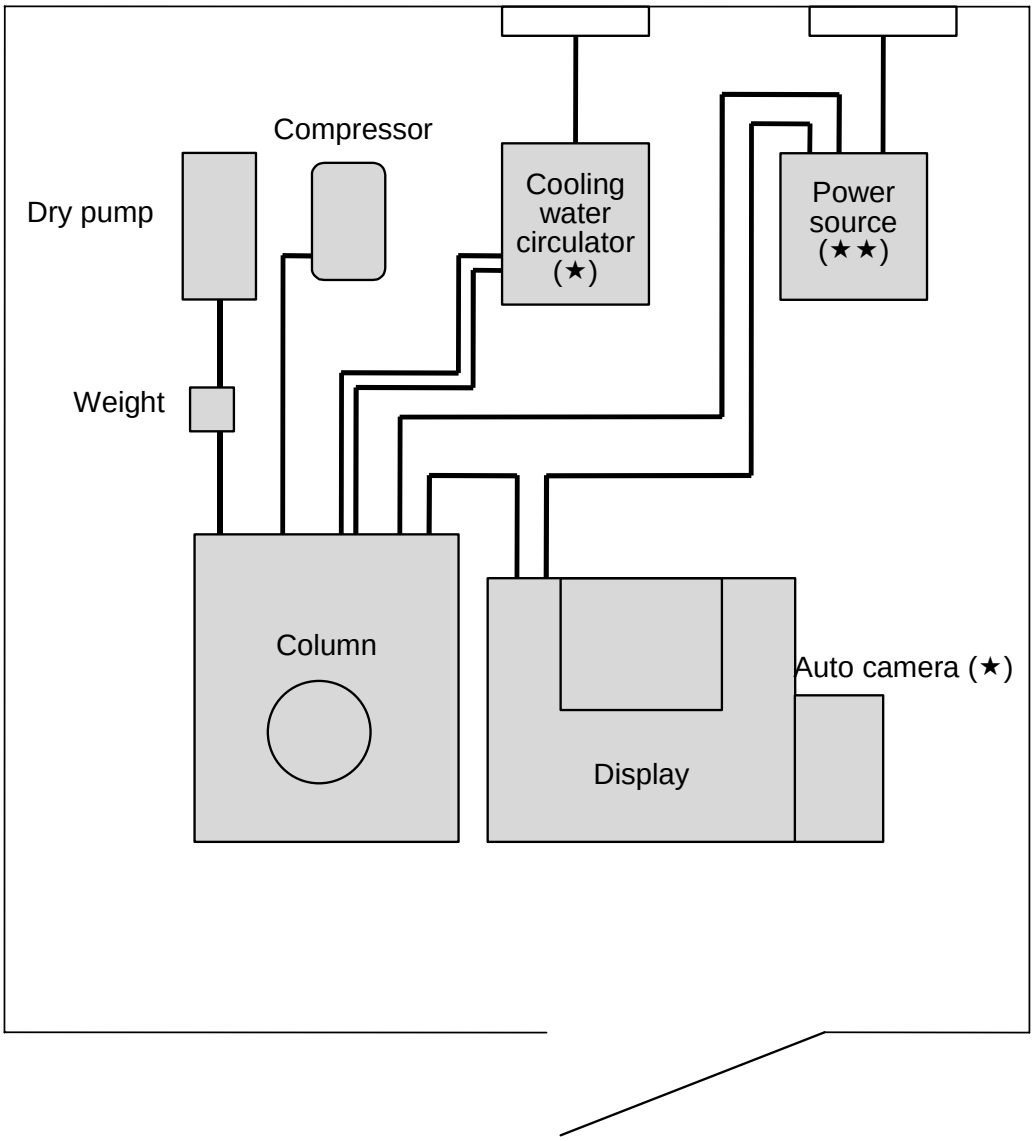

Figure 1-12: S-5200 Standard Layout

Circuit Diagram

The S-5200 circuit diagram is shown in **Figure 1-13**.

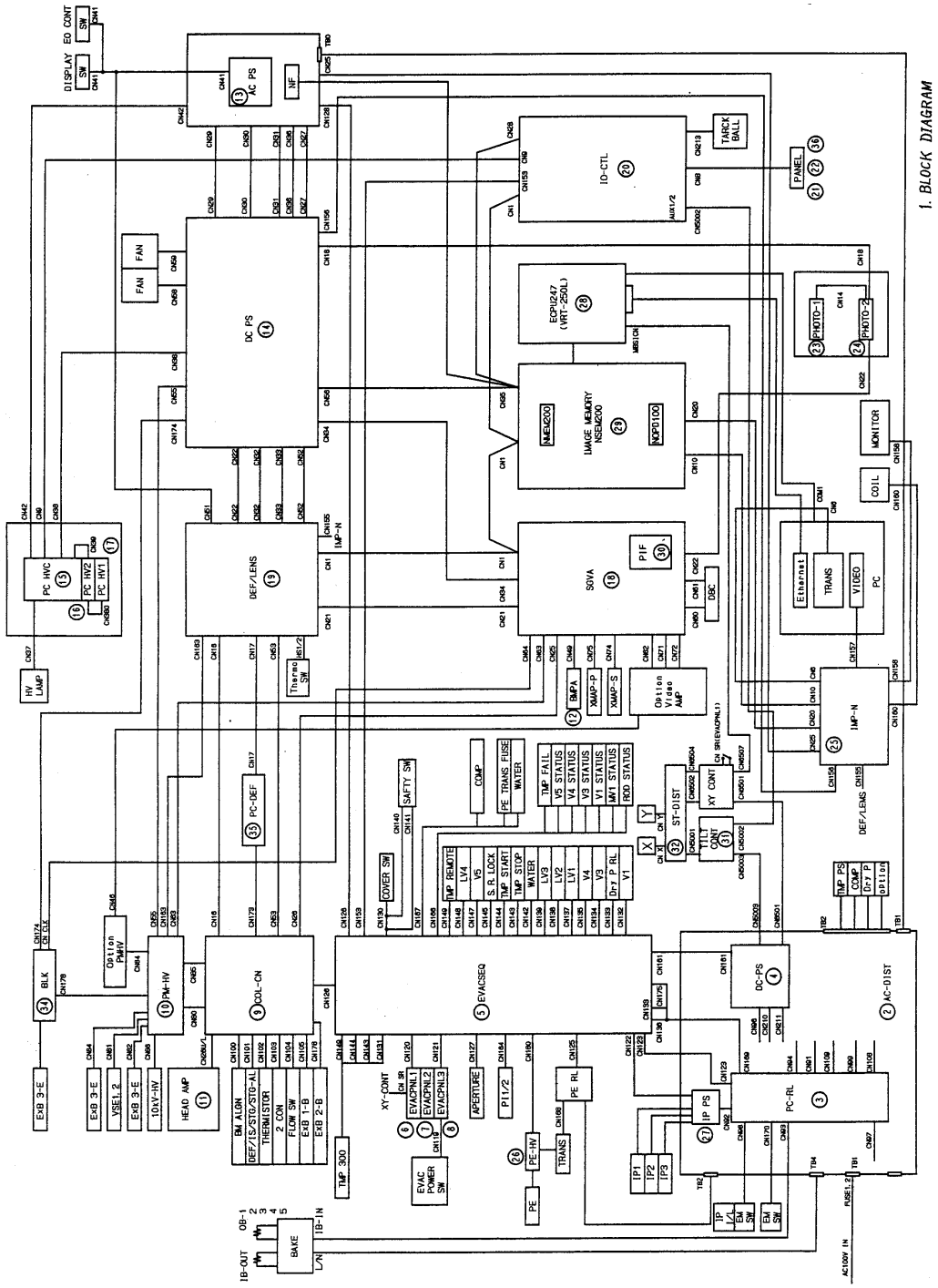

Figure 1-13: S-5200 Circuit Diagram

1.3.2 Software

The S-5200 software structure is shown in Figure 1-14. Refer to **Chapter 7** for details.

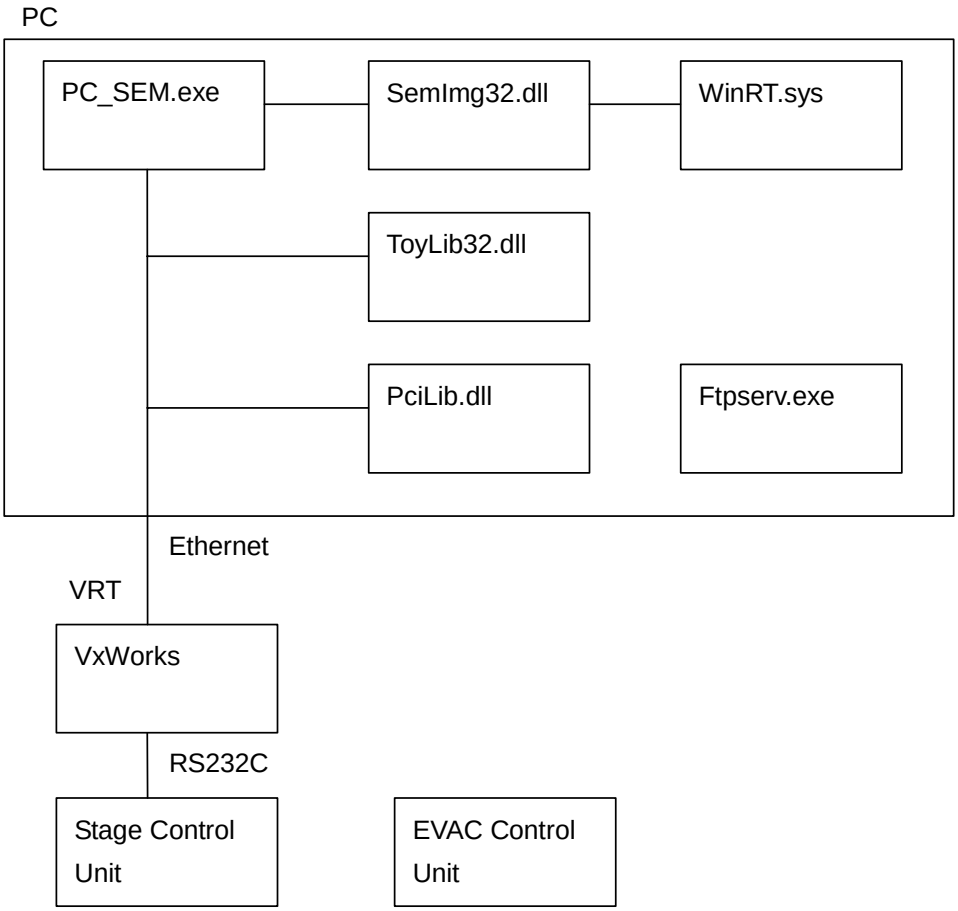

Figure 1-14: S-5200 Software Structure

PC Programs

- PC_SEM.exe: PC operation program
- SemImg32.dll: Imposer control program
- WinRT.sys: Imposer control driver
- ToyLib32.dll: Confirmation program (such as the size of PC memory)
- PciLib.dll: PCI program interface
- FtpServ.exe: PC FTP transfer program to download the VRT program or return the image
- Ras.exe: Self-diagnostic program
- SetIPAdr.exe: Program to set the IP address used by the instrument
- Other dll, ocx: Programs used for simple image processing, image DB and RS232C external communication

VRT Programs

- vxWorks: SEM control program
- vxWorks.sym: SEM control program symbol file
- vxWorks.mapA: SEM control program map file
- vxWorks.mapL: SEM control program map file

Stage Control and Vacuum Evacuation Program

- Stage control unit
- Vacuum evacuation ROM

1.4 Outer Appearance

The S-5200 main, display and power supply units are shown in **Figures 1-16**, **1-16** and **1-17** (Standard and CE/S2 structures) respectively.

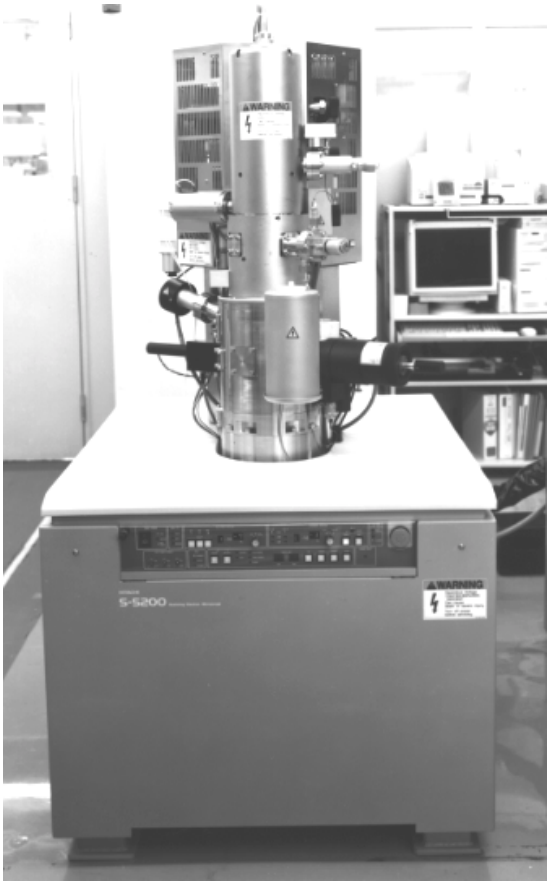

Figure 1-15: S-5200 Main Unit

Figure 1-16: S-5200 Display

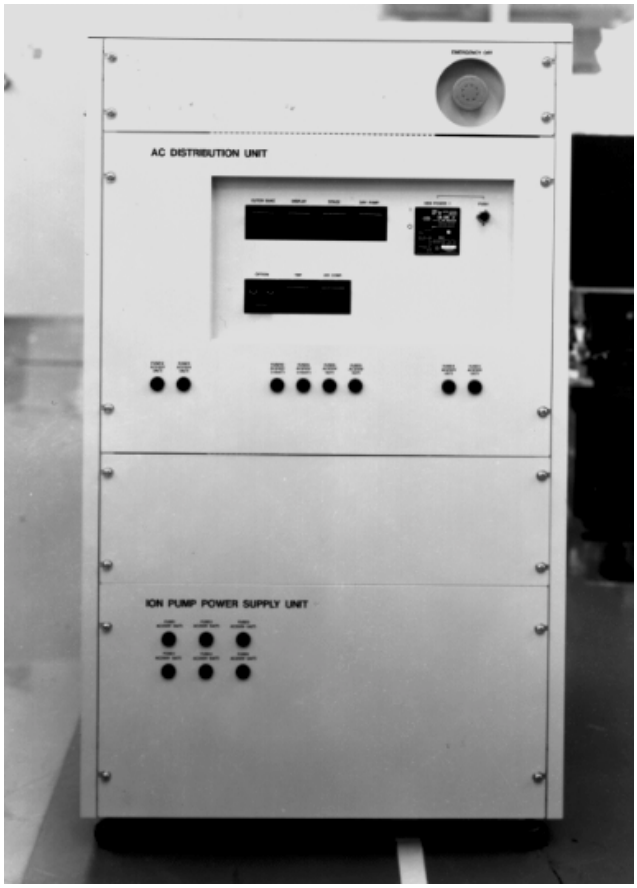

Standard Structure

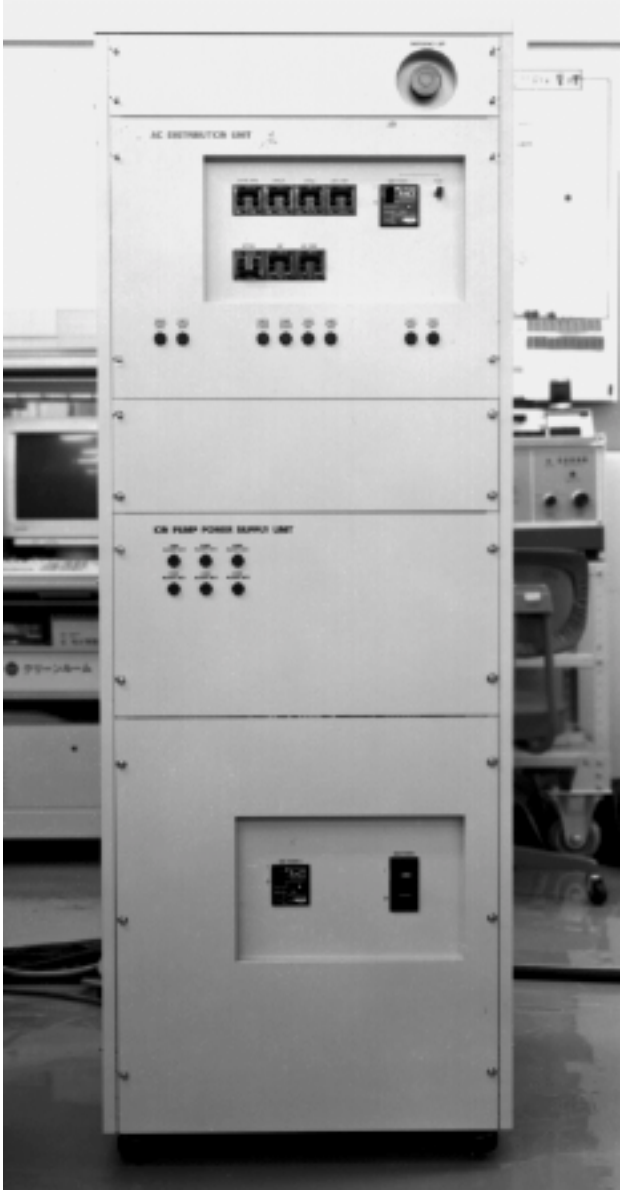

CE/S2 Structure (option)

Figure 1-17: S-5200 Power Supply Unit

This page intentionally left blank.

2 Safety

2.1 General Precautions

Before operating the machine, read the following safety instructions carefully.

- Follow all the precautions described on the machine and in the manual. Failure to do so can cause injury to you or damage to the machine.
- Keep in mind that the hazard warnings in this manual or on the machine cannot cover every possible case, as it is impossible to predict and evaluate all circumstances beforehand. Be alert and use your common sense.
- The worker is responsible for room ventilation when chemicals are to be used. Insufficient ventilation may be harmful.
- Do not modify the machine, replace parts, use unspecified parts or use the machine without the proper safety devices.
- The machine has alert labels (consisting of a symbol and a word) as shown in **Table 2.1**.

Table 2.1 Safety Alert Labels

Alert Label	Description
DANGER	Indicates an imminently hazardous situation that, if not avoided, will result in death or serious injury.
WARNING	Indicates a potentially hazardous situation that, if not avoided, can result in death or serious injury.
CAUTION	Indicates a hazardous situation that, if not avoided, will or can result in minor or moderate injury, or serous damage to the instrument.

2.2 Warnings

2.2.1 Type of Warnings

Electric Shock Warning

WARNING	
Electric Shock	• Voltages up to 200V AC and 30kV DC are used inside this instrument. Touching the parts may result in electric shock. • Do not remove the covers from the column, control or power units. Touching the internal parts or circuits while the instrument is on may result in death or serious injury due to electric shock.

High Temperature Warning

WARNING	
 High Temperature	• The electron gun and the ion pump are heated to 250°C or higher in order to keep the electron gun in a high vacuum. While operating, the surface temperature of the dry pump rises to about 70°C. Do not touch these sections to avoid burns.

Low Temperature Warning

WARNING	
 Low Temperature	• Wear protection glasses and gloves when liquid nitrogen is injected in the anti contamination trap (option).

Heavy Equipment Warning

WARNING	
 Heavy Equipment	• Do not lift heavy equipment such as weights or the dry pump manually. It may cause injury.

Pace Maker Warning Label

WARNING	
 Pacemaker	• This ion pump for this instrument has a permanent magnetic field. People who use a pacemaker must stay at least 0.6m from the instrument.

Repair/Inspection Label

WARNING	
Repair/Inspection	• When repairing or checking the electrical parts of the system, follow the customer's procedures. Make sure that the main power or the switchboard is turned off and that no one except the person working turns the power back on. • Turning the power on while the unit is being repaired may result in electric shock, or being caught in the mechanism.

2.2.2 Warning Labels

The locations of the Warning labels are shown in **Figure 2-1** and **2-2**.

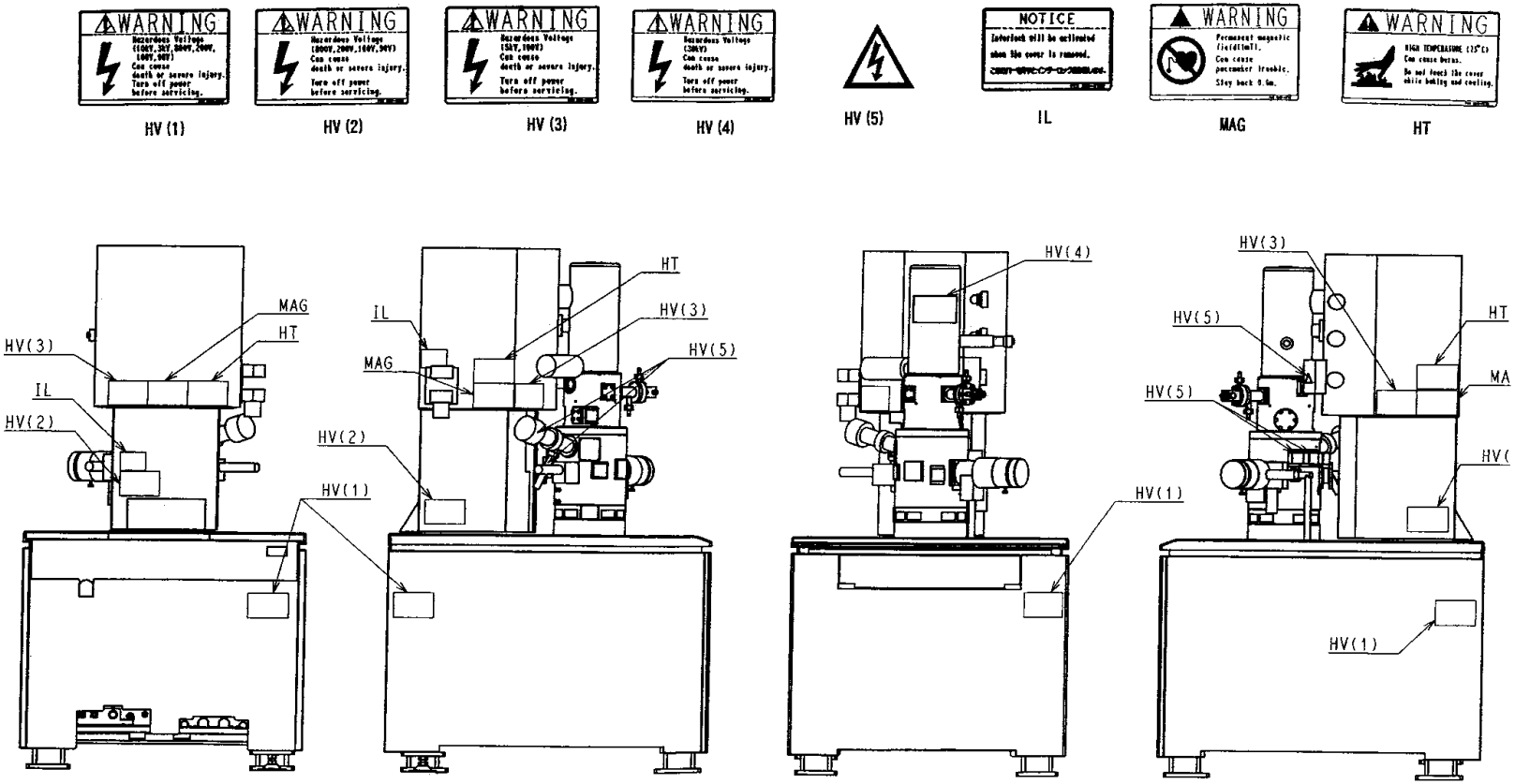

Figure 2-1: Warning Label Locations on the Main Unit

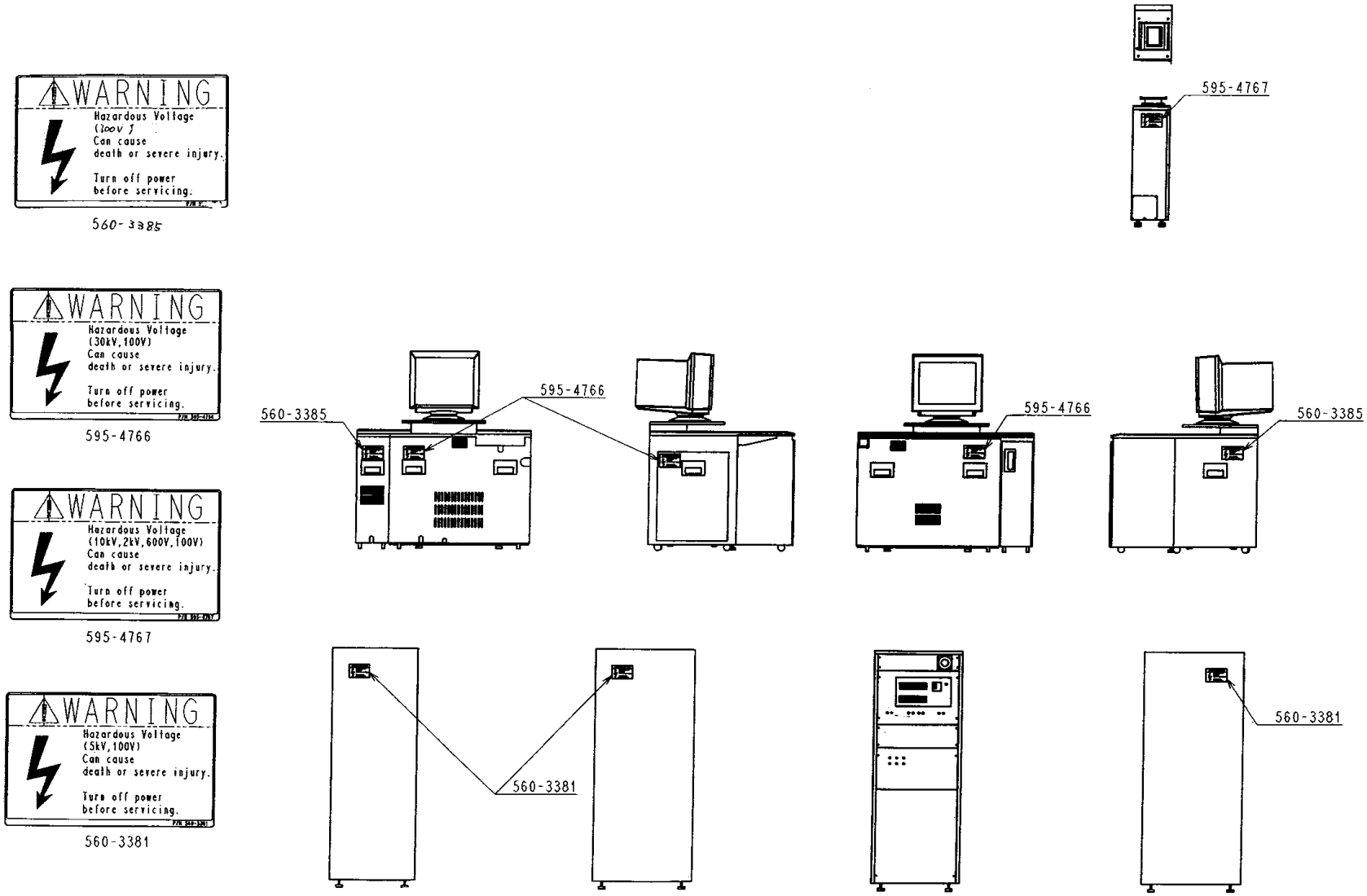

Figure 2-2: Warning Label Locations on the Display and Power Supply

2.3 Electric System

2.3.1 Breaker

Main Breaker (with handle key lock)

Capacity: 6 kVA
Maximum current: 30 A
Breaker Capacity: 30 kA

Leakage Current Breaker (SEM POWER 1)

Capacity: 6 kVA
Maximum current: 30 A
Sensitive current: 30 mA
Breaker Capacity: 2.5 kA

Leakage Current Breaker (SEM POWER 2)

Capacity: 5 kVA
Maximum current: 50 A
Sensitive current: 30 mA
Breaker Capacity: 5 kA

2.3.2 Safety Circuit Function

Interlock Operations

The interlock operations are shown in **Table 2-2**.

Table 2.2 Interlock Operations

No.	Safety Device	Operation Mode	Notes
1	Emergency SW (PS unit)	All stop.	
2	Emergency SW (Main unit)	All stop.	
3	Leakage breaker	All stop.	
4	IP cover	All stop.	
5	COL-CN board cover	All stop.	
6	Baking cover	Baking releases. Warning buzzer goes off.	Evacuation panel displays E32.
7	Baking HV cable protector	Baking releases. Warning buzzer goes off.	Evacuation panel displays E31.
8	Post HV protector	HV turns OFF	
9	PMHV board cover	HV turns OFF	
10	HV cable position detector	HV turns OFF	
11	Lens coolant flow meter	Valve closes. Warning buzzer goes off.	Evacuation panel displays E13.
12	Objective coil temperature sensor	Lens current turns OFF	

No.	Safety Device	Operation Mode	Notes
13	Dry pump motion current monitor	Evacuation system stops. Warning buzzer goes off.	
14	Compressed air pressure monitor	Valve closes. Warning buzzer goes off.	Evacuation panel displays E14.
15	DCPS board temperature sensor	Control power turns OFF. Error message appears.	

Interlock Diagram

The interlock diagram is shown in **Figure 2-3**.

Emergency SW Circuit Diagram

The emergency SW circuit diagram is shown in **Figure 2-4**.

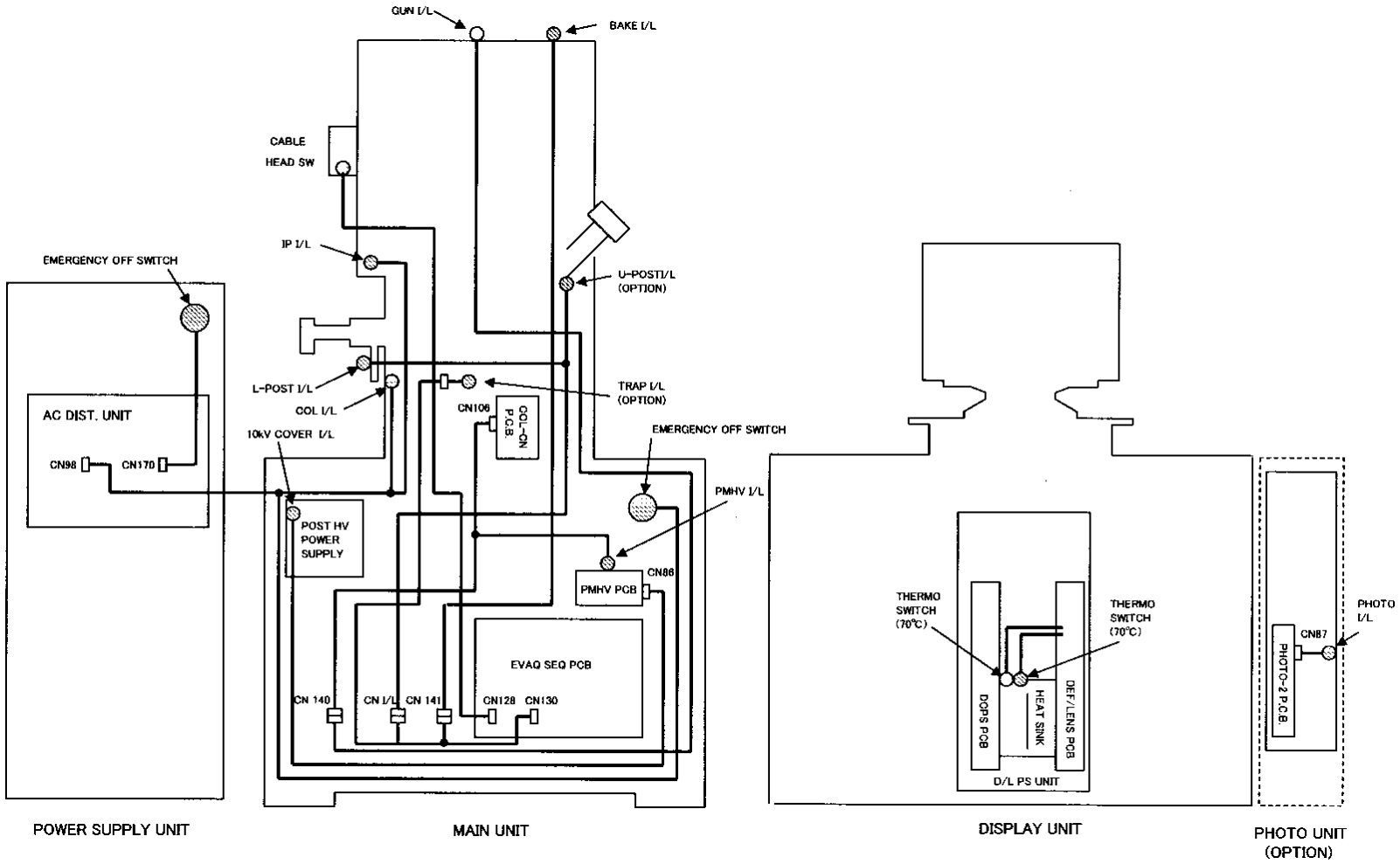

Figure 2-3: Interlock Diagram

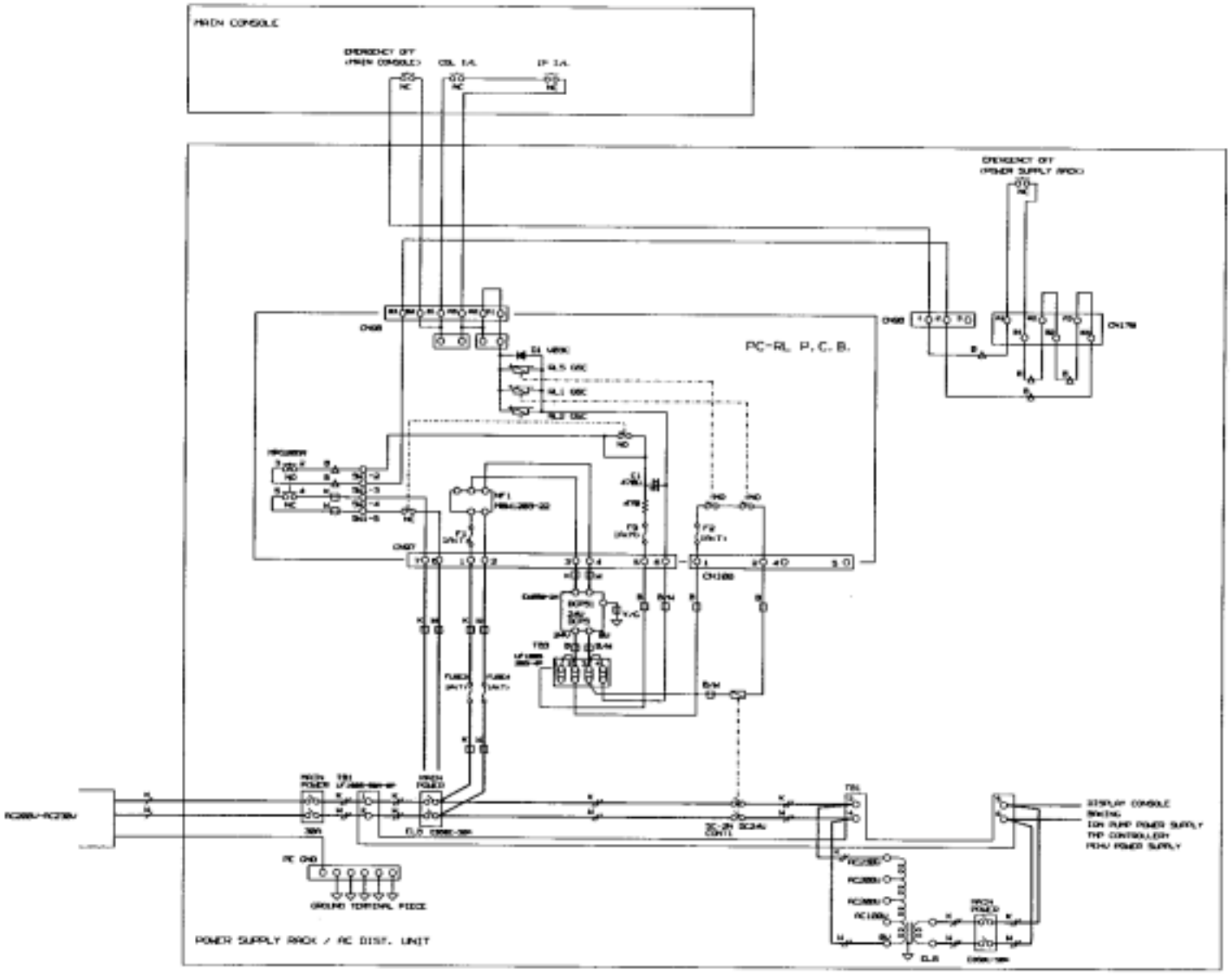

Figure 2-4: Emergency SW Circuit Diagram

Protection Circuits

The protection circuit operations are shown in **Table 2-3**.

Table 2.3 Protection Circuit Operations

No.	Location	Protection Function	Part	Part No.	If Fault Detected	Notes
1	AC DIST UNIT	Leakage detection	Leakage detector	ELB 50A (SEM POWER1)	Circuit breaker opens.	
2		Leakage detection	Leakage detector	ELB 30A (SEM POWER2)	Circuit breaker opens.	
3		Emergency stop	Switch	EM SWITCH	Circuit breaker opens.	
4		Ion pump HV protection	Switch	IP COVER INTERLOCK		
5		Outer bake heater short/overcurrent	Overcurrent detector	IELH 20A	Circuit breaker trips, turning off the heater.	
6		Display short/overcurrent	Overcurrent detector	IELH 20A	Circuit breaker trips, turning off the display.	
7		Stage short/overcurrent	Overcurrent detector	IELH 5A	Stage operation stops.	
8		TMP short/overcurrent	Overcurrent detector	IELH 5A	TMP operation stops.	Cannot create high vacuum in evacuation system.
9		Compressor short/overcurrent	Overcurrent detector	IELH 5A	Evacuation valve stops.	Buzzer sounds.
10		ACC short/overcurrent	Overcurrent detector	IELH 5A	For ACC	Optional
11		DP short/overcurrent	Overcurrent detector	IELH 10A	Evacuation system stops.	
12		Relay 24V circuit short/overcurrent	Fuse	F1 1A(T)	Entire system turns off due to fusing.	
13		Entire system hold (100V AC)	Fuse	F2 1A(T)	Relay turns off (except 24V) due to fusing.	
14		Evacuation system self hold	Fuse	F3 1A(T)	Evacuation system (except DP) turns off due to fusing.	100V AC
15		EVAC PS primary side short/overcurrent	Fuse	F4, 5 1A(T)	EVACSEQ and IP turn off due to fusing.	
16		IP PS primary side short/overcurrent	Fuse	F6, 7 1A(T)	IP turns off.	Cannot turn on IP power
17		Inner bake heater short/overcurrent	Fuse	F8 1A(T)	Heater turns off due to fusing.	Cannot create high vacuum
18		All system maintenance (24V)	Fuse	F9 1A(T)	Entire system turns off due to fusing.	
19		Relay 24V circuit short/overcurrent	Fuse	FUSE3, 4 1A(T)	Entire system turns off due to fusing.	
20		PE HV power short/overcurrent	Fuse	FUSE5, 6 1A(T)	Cannot apply HV	Cannot turn of PE HV

No.	Location	Protection Function	Part	Part No.	If Fault Detected	Notes
21		Stage power supply line short/overcurrent	Fuse	FUSE9, 10 1A(T)	Stage operation stops.	Stage control
22		EVAC +5V short/overcurrent	Fuse	FUSE11 1A(T)	EVACSEQ and IP turn off due to fusing.	
23		EVAC +24V short/overcurrent	Fuse	FUSE12 1A(T)	EVACSEQ and IP turn off due to fusing.	
24	DC DIST UNIT	EVAC SEQ +15V Primary side short/overcurrent	Fuse	F1 3.2A (T)	IP, Pi and Pe vacuum display Max.	
25		EVAC SEQ -15V Primary side short/overcurrent	Fuse	F2 3.2A (T)	IP, Pi and Pe vacuum display Max.	
26		EVAC SEQ +12V Primary side short/overcurrent	Fuse	F3 3.2A (T)	Aperture heater turns off.	
27		EVAC SEQ +15V Secondary side short/overcurrent	Fuse	F9 2.0A (T)	IP, Pi and Pe vacuum display Max.	
28		EVAC SEQ +15V Secondary side short/overcurrent	Fuse	F10 2.0A (T)	IP, Pi and Pe vacuum display Max.	
29		EVAC SEQ +12V Secondary side short/overcurrent	Fuse	F11 2.0A (T)	IP, Pi and Pe vacuum display Max.	
30		XY CONT, TILT-CTL +5V Primary side short/overcurrent	Fuse	F4 3.2A (T)	Stage does not operate.	
31		XY CONT, TILT-CTL +15V Primary side short/overcurrent	Fuse	F5 2.0A (T)	Stage does not operate.	
32		XY CONT, TILT-CTL -15V Primary side short/overcurrent	Fuse	F6 2.0A (T)	Stage does not operate.	
33		TILT-CTL +24V Primary side short/overcurrent	Fuse	F7 2.0A (T)	Stage does not operate.	
34		TILT-CTL -24V Primary side short/overcurrent	Fuse	F8 2.0A (T)	Stage does not operate.	
35		XY CONT, TILT-CTL +5V Primary side short/overcurrent	Fuse	F12 3.2A (T)	Stage does not operate.	
36		XY CONT, TILT-CTL +15V Primary side short/overcurrent	Fuse	F13 2.0A (T)	Stage does not operate.	
37		XY CONT, TILT-CTL -15V Primary side short/overcurrent	Fuse	F14 2.0A	Stage does not operate.	
38		TILT-CTL +24V Primary side short/overcurrent	Fuse	F15 2.0A	Stage does not operate.	
39		TILT-CTL -24V Primary side short/overcurrent	Fuse	F16 2.0A	Stage does not operate.	

2.3.3 Hazardous Voltages and Maintenance Types

Hazardous Voltages and Maintenance Type for Each Board

The hazardous voltage for each board and the maintenance types are shown in **Tables 2.4**, **2.5**, **2.6** and **2.7**. The maintenance types are as follows.

Type 1: No power is applied to the instrument.

Type 2: Power is applied to the instrument. The powered circuit is covered or insulated.

Type 3: Power is applied to the instrument. The powered circuit is exposed and it is possible to contact accidentally. The exposed voltage is 30V rms (42.2V peak) and 60 VDC or 240 VA or less.

Type 4: Power is applied to the instrument. The powered circuit is exposed and it is possible to contact accidentally. The exposed voltage is 30V rms (42.2V peak) and 60 VDC or 240 VA or more.

NOTE: Boards that do not require daily maintenance are marked as *1 in the "Notes" column.

Table 2.4 Hazardous Voltages and Maintenance Type for PS Unit boards

No.	Unit Name	Voltage	Type 1	Type 2	Type 3	Type 4	Notes
1	PC-RL P.C.B.	100 V AC 70 V AC 24 V DC				O	*1
		200 V AC 100 V AC 70 V AC 24 V AC				O	CD/S2-0200 power supply only *1
2	DCPS COL P.C.B.	70 V AC 24 V AC 17 V AC 16 V AC 14 V AC 8 V AC 24 V DC 12 V DC 5 V DC				O	*1
3	TRANS 0	200-230 V AC				O	CE/S2-0200 power supply only *1
4	TRANS 1	100 V AC 70 V AC 16 V AC 14 V AC				O	*1
5	TRANS 2	100 V AC 24 V AC 17 V AC 8 V AC				O	*1
6	IP DC P.C.B.	1,085 V AC 5,000 V AC				O	*1
7	TRANS 1, 2, 3	1,085 V AC 100 V AC 6.5 V AC				O	*1

Table 2.5 Hazardous Voltages and Maintenance Type for Display Unit Boards

No.	Unit Name	Voltage	Type 1	Type 2	Type 3	Type 4	Notes
1	AC PS P.C.B.	114 V AC					*1
		100 V AC					
		67.5 V AC					
		40 V AC					
		33 V AC					
		31.5 V AC					
		26.5 V AC				O	
		19.4 V AC					
		16.4 V AC					
		13.3 V AC					
		11.5 V AC					
		8.5 V AC					
		5 V DC					
2	DC PS P.C.B.	114 V AC					*1
		67.5 V AC					
		33 V AC					
		31.5 V AC					
		26.5 V AC					
		19.4 V AC					
		16.4 V AC					
		13.3 V AC					
		11.5 V AC					
		8.5 V AC					
		110 V DC				O	
		65 V DC					
		35 V DC					
		30 V DC					
		25 V DC					
		18 V DC					
		15 V DC					
		12 V DC					
		8 V DC					
		5 V DC					
3	DEF.LENS P.C.B.	46 V AC					*1
		16 V AC					
		7.5 V AC				O	
		36 V DC					
		15 V DC					
		5 V DC					
4	PC HVC P.C.B.	46 V AC					*1
		16 V AC					
		7.5 V AC				O	
		36 V DC					
		15 V DC					
		5 V DC					

No.	Unit Name	Voltage	Type 1	Type 2	Type 3	Type 4	Notes
5	PC HVC2 P.C.B.	500-30,000 V DC	O				
6	PC HVC1 P.C.B.	500-30,000 V DC	O				
7	IMP-N P.C.B.	15 V DC 5 V DC 3.3 V DC 1.23 V DC			O		
8	IO-CTL P.C.B.	5 V DC	O				
9	IMAGE MEMORY NSEM200 P.C.B.	12 V DC 5 V DC	O				
10	ECPU247 (VRT-250L) P.C.B.	5 V DC	O				
11	SGVA P.C.B.	15 V AC 12.5 V AC 10 V AC 5 V DC 1.5 V DC			O		
12	PHOTO I/F P.C.B.	15 V DC 10 V DC			O		
13	PC	100 V AC	O				
14	MONITOR	100 V AC	O				
15	OPERATION PANEL	5 V DC			O		

Table 2.6 Hazardous Voltages and Maintenance Type for Main Unit Boards

No.	Unit Name	Voltage	Type 1	Type 2	Type 3	Type 4	Notes
1	BAKE P.C.B.	100V DC 70 V DC				O	*1
2	PENNING POWER SUPPLY	1,100 V DC				O	*1
3	PMHV P.C.B.	800 V DC 200 V DC 100 V DC 80 V DC 50 V DC 18 V DC 15 V DC 6.8 V DC 5 V DC				O	*1
4	COL-CN P.C.B.	30 V DC 25 V DC 15 V DC			O		
5	HEAD AMP P.C.B.	600 V DC 15 V DC	O				
6	BLK P.C.B.	100 V DC 15 V DC 8 V DC 5 V DC				O	*1
7	BM PA P.C.B.	5 V DC			O		

No.	Unit Name	Voltage	Type 1	Type 2	Type 3	Type 4	Notes
8	PC-DEF P.C.B.	35 V DC 15 V DC			O		
9	EVAC SEQ P.C.B.	24 V DC 15 V DC 12 V DC 5 V DC			O		
10	EVAC PANEL 1 P.C.B.	5 V DC			O		
11	EVAC PANEL 2 P.C.B.	5 V DC			O		
12	EVAC PANEL 3 P.C.B.	5 V DC			O		
13	ST-DIST P.C.B.	24 V DC 15 V DC 5 V DC			O		
14	XY CONTROLLER	24 V DC 15 V DC 5 V DC			O		
15	TILT CONT P.C.B.	15 V DC 10 V DC 5 V DC			O		
16	TMP CONTROLLER	100 V AC	O				
17	TMP		O				
18	FE GUN	500-30,000 V DC	O				
19	ION PUMP 1, 2, 3	5,000 V DC	O				
20	10 KV POWER SUPPLY	10,000 V DC 16 V DC	O				

Table 2.7 Hazardous Voltages and Maintenance Type for Photo Unit (Option) Boards

No.	Unit Name	Voltage	Type 1	Type 2	Type 3	Type 4	Notes
1	PHOTO 1	2,000 DC 600 V DC 100 V DC 15 V DC				O	*1
2	PHOTO 2	15 V DC 6 V DC 2 V DC			O		
3	PHOTO CRT	10,000 V DC 2,000 V DC 600 V DC	O				
4	10 KV POWER SUPPLY	10,000 V DC 15 V DC	O				

Maintenance Type 4 Procedure

Perform the following maintenance procedure for the boards applicable to maintenance type 4.

1. Turn off all power to the instrument.
2. Remove the cover.
3. Connect all the check terminals to a digital voltmeter and an oscilloscope.
4. Clear the work area and turn on the power to the instrument
5. After checking the check terminal, turn off all power to the instrument.
6. Remove the digital voltmeter and the oscilloscope.
7. Perform the maintenance work.
8. Attach the cover.
9. Turn on power to the instrument.

2.4 Potential Mechanical Hazards

Potential hazards during maintenance are shown in **Table 2.8**.

Table 2.8 Potential Hazards during Maintenance

Item	Potential Hazard
Jamming	Fingers may be caught while replacing a cover, etc.
Powder dust	Abrupt air release from the air compressor may cause dust to fly out of the compressed air tank.
Fall	• The instrument may fall if the proper transportation methods are not used. • The normal handling may cause the column unit and mounting base to fall when they are placed on the anti-vibration machine.
Heavy object	Lifting heavy objects such as the dry pump during maintenance may cause injury.
Long and continuous operation	Staring at the monitor and operating the keyboard for a long time without breaks may cause eye fatigue and damage your wrists.

2.5 Earthquake Protection

In recent years earthquake protection Model Codes for non-structural building components and equipment are being applied. Architects, engineers and contractors are relied upon to know, understand, design and install earthquake protection in accordance with the requirements of those codes.

Follow the Hitachi drawings showing the locations of fixed metal fittings that are needed to provide earthquake protection. It is recommended that earthquake protection be applied based on local government regulations.

2.5.1 Center of Gravity Locations

The Center of Gravity Locations are shown in **Figures 2-5** (Main Unit), **2-6** (Display Unit) and **2-7** (Power Supply Unit).

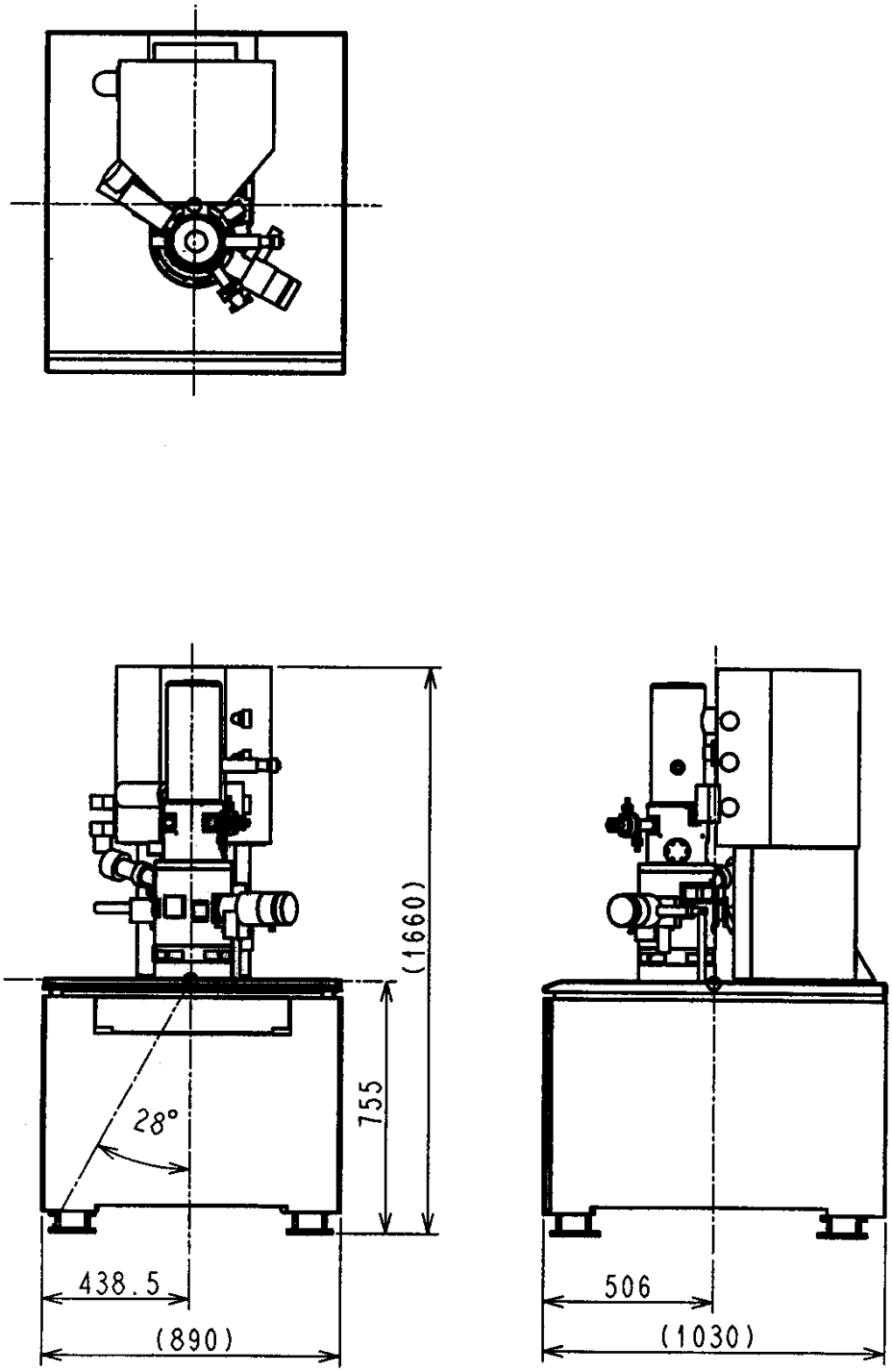

Figure 2-5: Center of Gravity Location for the Main Unit

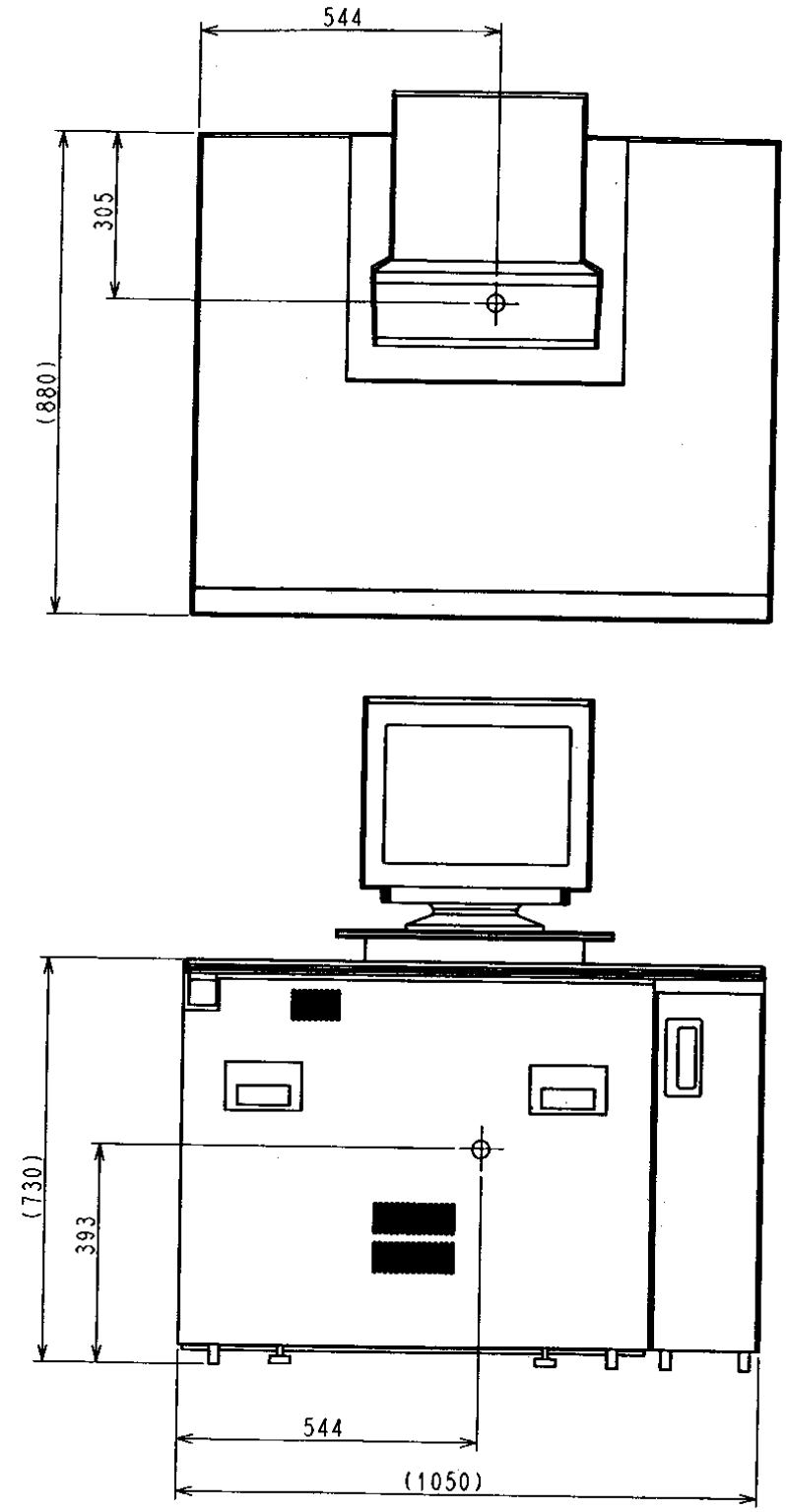

Figure 2-6: Center of Gravity Location for the Display Unit

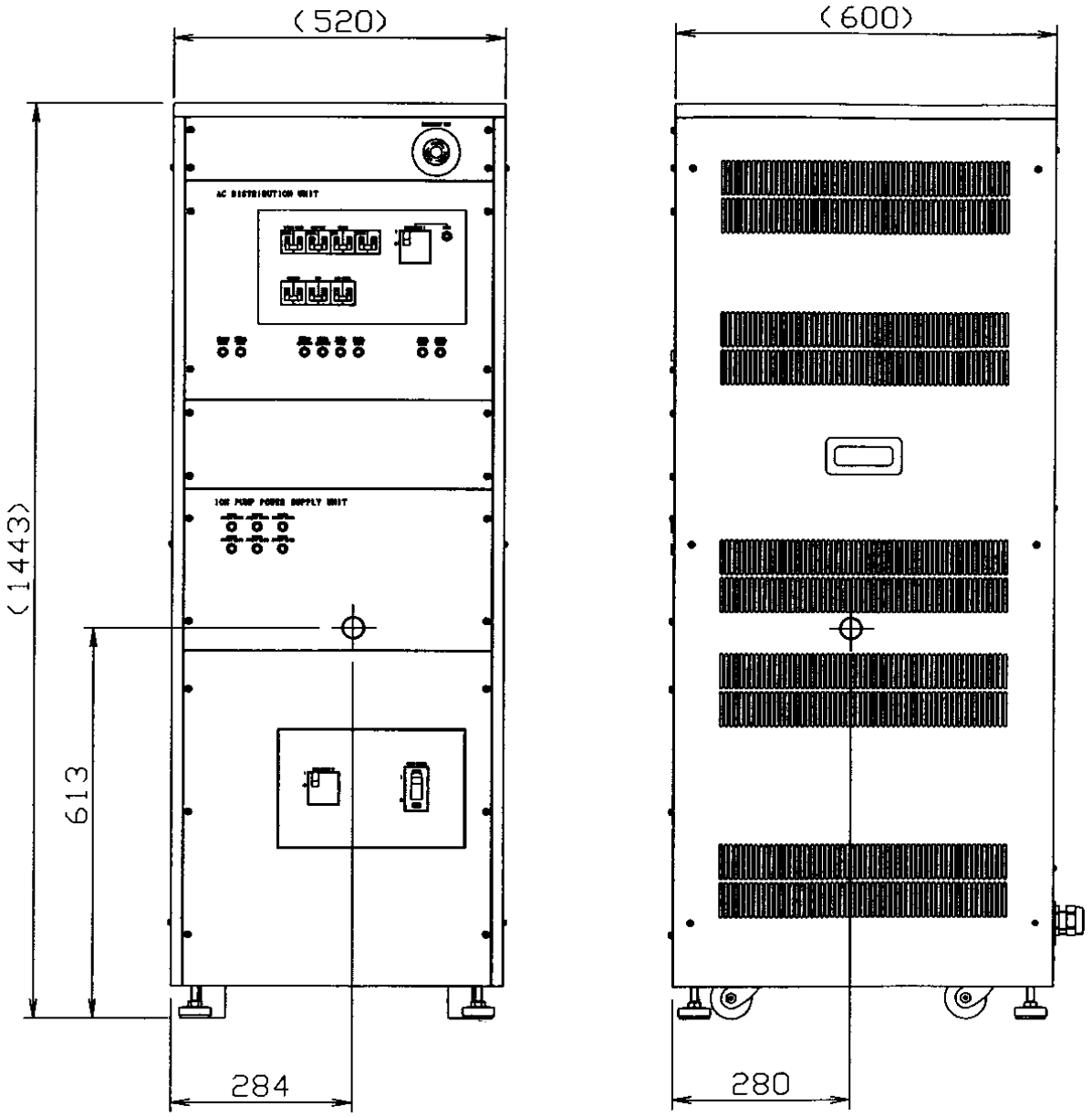

Figure 2-7: Center of Gravity Location for the Power Supply

2.5.2 Earthquake Protection

The earthquake protection diagrams are shown in **Figures 2-8** (Main Unit), **2-9** (Display Unit) and **2-10** (Power Supply Unit).

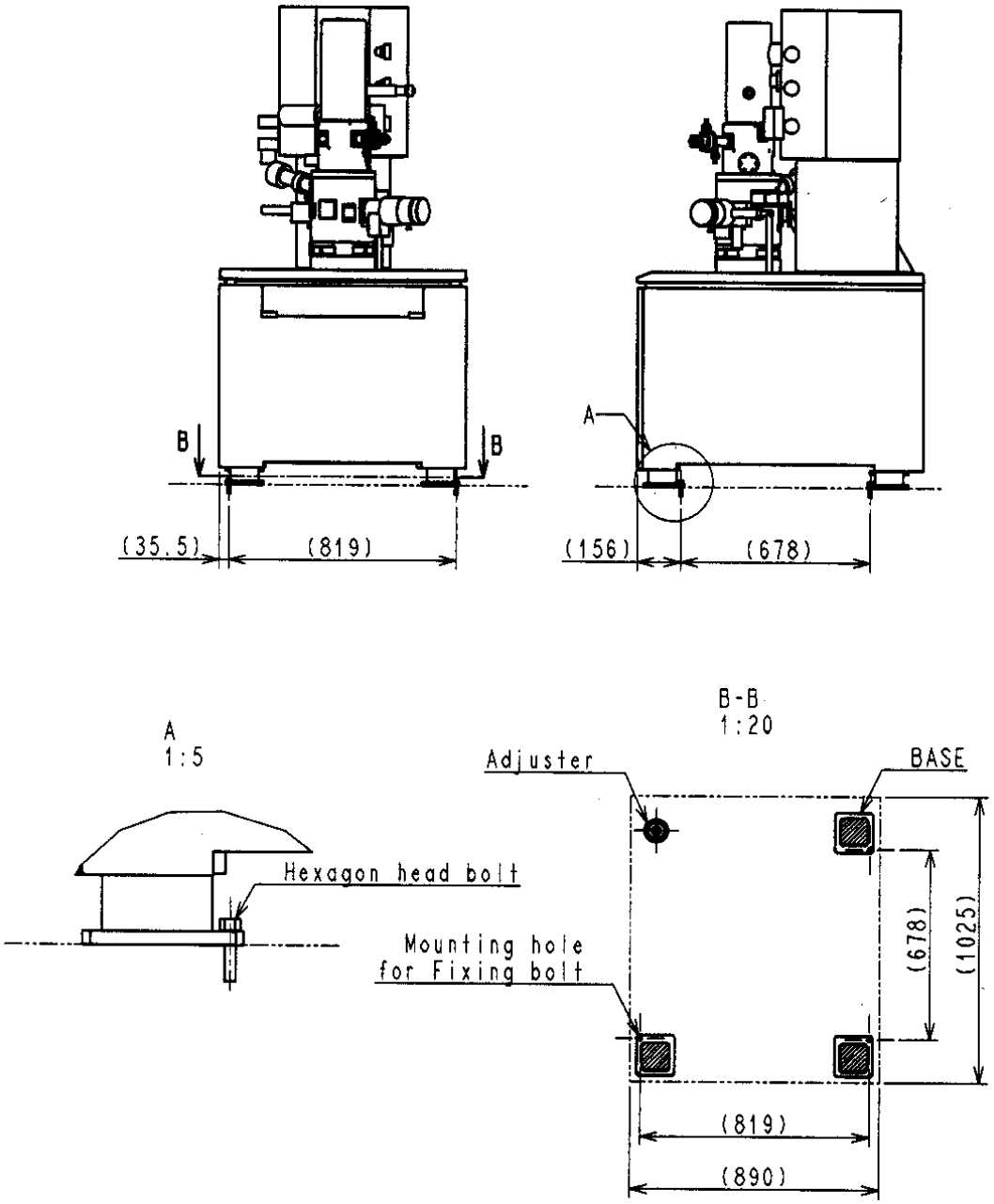

Figure 2-8: Earthquake Protection Diagram for the Main Unit

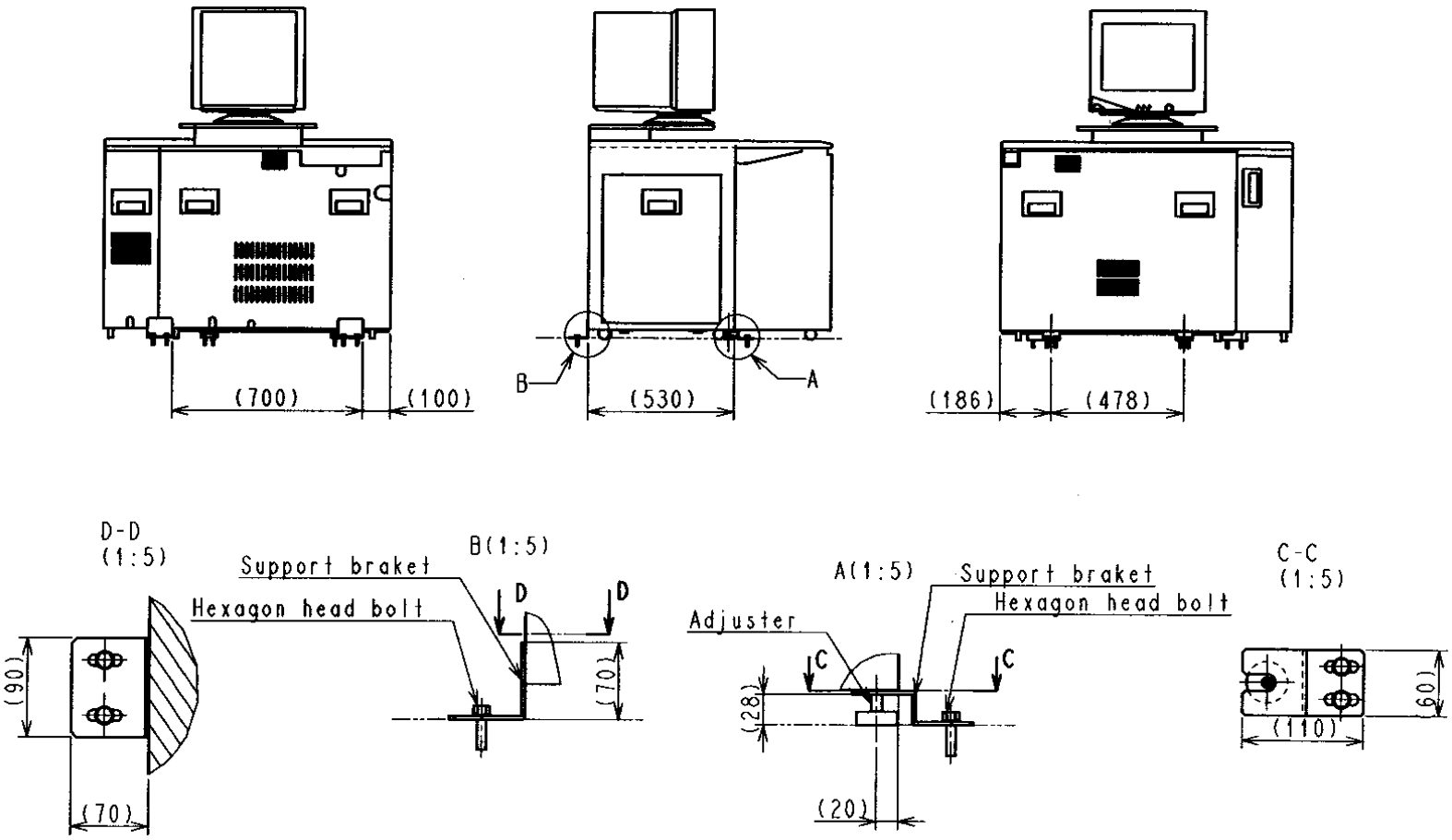

Figure 2-9: Earthquake Protection Diagram for the Display Unit

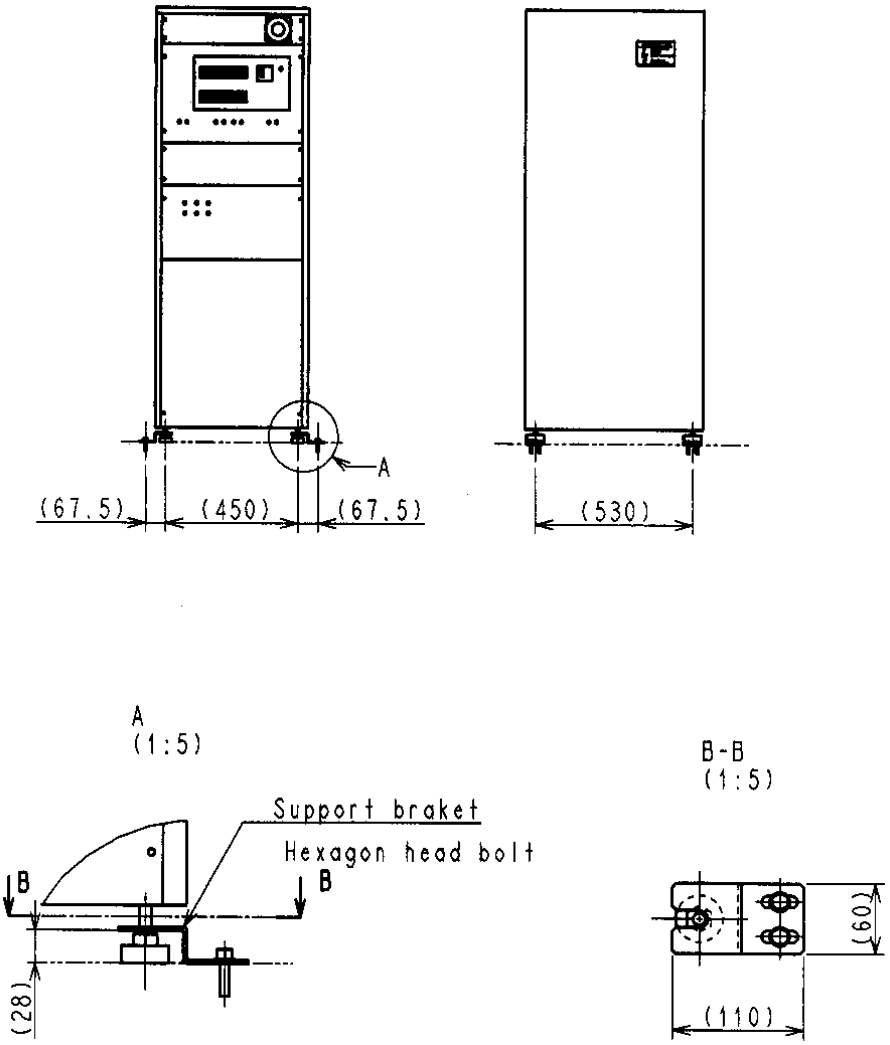

Figure 2-10: Earthquake Protection Diagram for the Power Supply Unit

2.6 Miscellaneous

2.6.1 Leakage Detection

This instrument does not come with a water leakage detector. Leakage may occur due to a crack or corrosion in the flow route caused by the quality or pressure change of the cooling water. If a cooling water circulator cannot be used, obtain and install a water supply kit. The water supply kit comes with a decompression regulator and a leakage censor to prevent massive water leaks in emergency situations.

2.6.2 Cooling Water

- Use water with a chlorine residue of 0.5 ppm max. If the chlorine residue is higher, use a cooling water circulator. High chlorine residue can cause water leakage due to corrosion in the flow route.
- The water flow rate must be 1 to 1.5 lit/min. (1 system)
- The temperature must be 10°C to 20°C. (Temperature variation must be 0.5°C max. for 10 minutes.)
- The cooling water supply port must be tightly connected to the hose using a pipe taper screw to avoid detaching.
- The drain hose must be connected and firmly attached to drain. Detaching the hose from the drain may cause flooding.
- Make sure to close the cooling water supply faucet after use.
- Flexible PVC is used for the drain hose. The hose must be replaced periodically and checked for leaks before use because the hose can become hard or cracked after prolonged use.
- Use an anti-freeze coolant circulator if cooling water may freeze during winter.
- Monitor the cooling water temperature. A large difference between the cooling water temperature and the room temperature may cause dew condensation.

2.6.3 Personal Computer

Data Backup

Data may not be able to be used due to breakdown or incorrect operation of the instrument. The content of the hard disk (HD) must be periodically transferred to a floppy disk (FD) or an optical magnetic disk (MO) as an emergency measure. This periodic transfer is called back up.

Computer Application

Do not install any application software other than the software for this instrument in the PC. This may cause not only unpredictable displays, but damage the instrument or prevent the software for the instrument from operating correctly. If other applications are installed and the instrument stops operating correctly, Hitachi will not be responsible for the instrument.

Computer Virus

If the program or data is scrambled suddenly, or an unpredictable operation or display is shown on the monitor, the PC may be infected with a virus. The computer virus is a licentious program that manipulates the PC or destroys the data by sneaking into the PC. The program to detect/remove a virus from the PC is called a virus check program. The PC can be infected with a virus when an infected exchangeable storage media, such as the

floppy disk, is used or through network. Do not use a file that may be infected with a virus. If the file may cause the PC to be infected with a virus, run the virus check program. The users of the instrument are responsible for obtaining the virus check program and removing computer viruses. However, some virus check programs may not remove the virus. Make sure to back up the hard disk beforehand.

Computer Setting Change

The settings described below are applied to the PC in this instrument in order to run the S-5200 program. Do not change these settings.

- Network Setup

  In the S-5200, the user interface PC and the SEM control processor are connected using Ethernet. The SEM controller gets the SEM control program from the PC when the computer is logged on. Therefore, if the network connection is changed, the instrument will not start.

- Display Setup

  The S-5200 comes with the imposer to display the SEM image. The 1024 x 768 pixels, 65536 or more colors and 75 Hz Refresh Rate are selected to operate this imposer correctly. If these settings are changed, the image may be distorted.

- Task Setup for SEM

  In the S-5200, an FTP server program starts automatically to transfer the files between the PC and the SEM when the computer is logged on. If the setup is changed or stopped, the S-5200 will not operate properly.

- Power Management Setup

  Set Energy Save to OFF for the PC power management. If Energy Save is set to ON, the commands between the PC and the SEM may be interrupted, causing the S-5200 to not operate correctly.

- Virtual Memory Setup

  A large amount of memory is needed to process 2560 x 1920 SEM images. From the Performance tab of the System Properties dialog box, set Virtual Memory to 200MB.

- The SEM data manager controls the saved image data files in the database. Do not move the image data files, change the file names, or delete the files using Windows Explorer. Discrepancies between the SEM data manager saved data and actual data can cause the SEM data manager to work improperly. If such an error occurs, delete the data in question using the Remove List function in the Batch Process window of the SEM data manager. If the image is needed and the file exists, the image can be restored using the Add From File window.

Handling the Computer

- Handling the Files

  The S-5200 program files are stored in the folders shown below. Do not delete or move the files in these folders.

  C:\ProgramFiles\Pc_sem
  C:\Vrtsys

- Folder Properties

  Do not change the property of the folders shown below, such as removing the sharing setting or changing the access.

  C:\Vrtsys
  C:\TEMP

Power Failure

A momentary voltage reduction in the power supply due to a power failure or lightning strike may damage the PC, the basic software, the application software or the data. It is recommended that an AC Uninterruptible Power Supply (UPS) be used to prevent problems caused by momentary voltage reductions.

Personal Computer (PC)

Do not disconnect the power to the PC independently. Make sure to turn OFF the power with the display power (DISPLAY) switch after the SEM system program is closed and the Windows NT program is shutdown. If the PC is powered off while the HD or FD is being accessed, the stored data and software may be damaged. If the PC freezes, press Alt, Ctrl and Delete simultaneously, and select the process that has stopped and then select Close.

This page intentionally left blank.

3 Installation

3.1 Installation Requirements

3.1.1 General Requirements (Installation Site)

When installing the Model S-5200, the SEM room should not be:

- near a transformer substation.
- near an elevator.
- near high power equipment (such as an electric furnace, or its power supply).
- near a spark discharge device or a high-frequency apparatus.
- filled with gas that corrodes metals.
- exposed to direct sunlight or a strong draft.
- dusty.
- subjected to severe vibrations.
- supplied with a ground wire common to other electric equipment
- adjacent to radio or sound wave sources.

3.1.2 Power Source

Alternating single phase:	100V AC (Order an autotransformer when the voltage is other than 100V.)
Voltage fluctuation:	±10%
Frequency:	50 or 60 Hz
Energy consumption:	4.0kVA

- Continuous power is required.
- The in-house wiring to the switchboard must be pipe wiring as much as possible. The distance between the column unit and the wall breaker panel must be 1. 5m or more.
- Make sure to use a SW (with fuse) or a circuit breaker on the breaker panel.
- The input AC cord between the main unit and the breaker panel must be 10m long.
- An M5 crimp terminal (inside diameter: 5.3mm, outside diameter: 9.5mm) is put on the tip of the input cord.
- An autotransformer comes with the power unit for CE S2 structure.

3.1.3 Ground Terminal

Connect the instrument to a ground terminal having a ground resistance of 100Ω or less (No. 3 type ground). Do not share the ground terminal with any other electric power equipment (independent earth grounding is essential).

3.1.4 Water Supply and Drainage

Water flow rate:	1.0 to 1.5 lit/min.
Water pressure:	50 to 100 kPa (0.5 to 1 kgf/cm^2)
Water temperature:	10 to 20°C
Temperature variation:	0.5°C/10 min
Water supply faucet:	Rc 3/8 (tapered internal thread)
Drain port:	1 port (natural drainage, use one tapered internal thread when the cooling water circulator is used.)

- It is recommended that the custom cooing water circulator be used.
- The water faucet and drain port must be near the column unit. The drain port must be located at a lower level than the column unit.
- Use water with a chlorine residue of 0.5 ppm or less. If an appreciable amount of deposits are found, a water filter should be attached.

3.1.5 Compressed Air

Air pressure: 350 to 500 kPa

NOTE: It is recommended that the applicable filter be used to remove water and oil from the compressed air.

3.1.6 Stray Magnetic Fields

The stray magnetic field at the installation site should be measured before installation. If the intensity of the magnetic field meets the allowable value described in **Table 3.1**, the image will not be affected. Upon receiving an order, the Hitachi sales must verify that the stray magnetic field at the customer's site meets the specification.

If there is a large magnetic clutch or power line near the SEM, it may result in sudden variations in the current or the magnetic field. If the SEM is installed in an environment with many stray magnetic fields, the magnetic field may cause the SEM image to expand, contract, distort or shift, and the electron scanning beam to sway, resulting in expansion, contraction, distortion, high frequency noise or streaks in the SEM image.

Since synchronous scanning mode is used at the power source for recording the SEM images, the allowable stray magnetic field is set based on the impact of the power source on the synchronous scanning mode. The image distortion varies depending on whether or not the stray magnetic field component is synchronous with the power source frequency.

The image distortion caused by a synchronous stray magnetic field (AC magnetic field) normally yields a mildly distorted expansion and contraction (**Figure 3-1**) whereas the image distortion caused by an asynchronous stray magnetic field (DC magnetic variation) appears as an image shift or high frequency noise (**Figure 3-2**).

When a direct current (DC magnetic field) in the stray magnetic field changes slowly, a flowing image will appear. Therefore, the allowable values for the synchronous power source component, the asynchronous power source component and the temporal change (drift) will vary.

Because the degree of impact on the electron scanning beam varies for the horizontal and vertical directions, the allowable values of each direction varies. The allowable values described in **Table 3.1** are stipulated as the values for high resolution observation.

If the settings other than shown below are used, and the value is less than the allowable value, the image may still be distorted. Generally the impact of the stray magnetic field (fluctuation of the electron scanning beam by the stray magnetic field) is inversely proportional to the square root of the accelerating voltage (if other conditions remain fixed).

Table 3.1 Allowable Stray Magnetic Field (excluding magnetic field drift)

Resolution Settings	AC Magnetic Field (effective value)		DC Magnetic Field Change (peak to peak)	
	Horizontal	Vertical	Horizontal	Vertical
Accelerating voltage: 1 kV Magnification: 150,000 x Specimen height: 1.5 mm Probe current: Normal	200 nT	50 nT	200 nT	50 nT
Accelerating voltage: 30 kV Magnification: 600,000 x Specimen height: 0.5 mm Probe current: Normal	300 nT	70 nT	300 nT	70 nT

NOTE:

- Since the power synchronous component (AC magnetic field) is an effective value, multiply the allowable value by 2.8 if P – P value (peak to peak) is used for evaluation.
- DC magnetic field fluctuation indicates a sudden change of the stray magnetic field with time.
- The allowable value of the AC magnetic field will cause image distortion (expansion, contraction and curvature) of 0.5 mm at the specified magnification.
- The allowable value of the DC magnetic field fluctuation will cause a disturbance (image shift or high frequency noise) of 0.2 mm on the image at the specified magnification.
- Since a stable DC component does not cause electron line sway, it does not affect the image if the amount is around 30 or 40 µT.
- The allowable values shown in **Table 3.1** indicate the values at the specified resolution settings. If the settings are other than this, the image becomes more susceptible to the stray magnetic field. The lower the accelerating voltage, the more the image is susceptible to the stray magnetic field.
- If the value exceeds the allowable value shown in **Table 3.1**, one of the solutions shown below is required.
    - Consider another facility location.
    - Install a magnetic shield box.
    - Install an active magnetic field canceller.

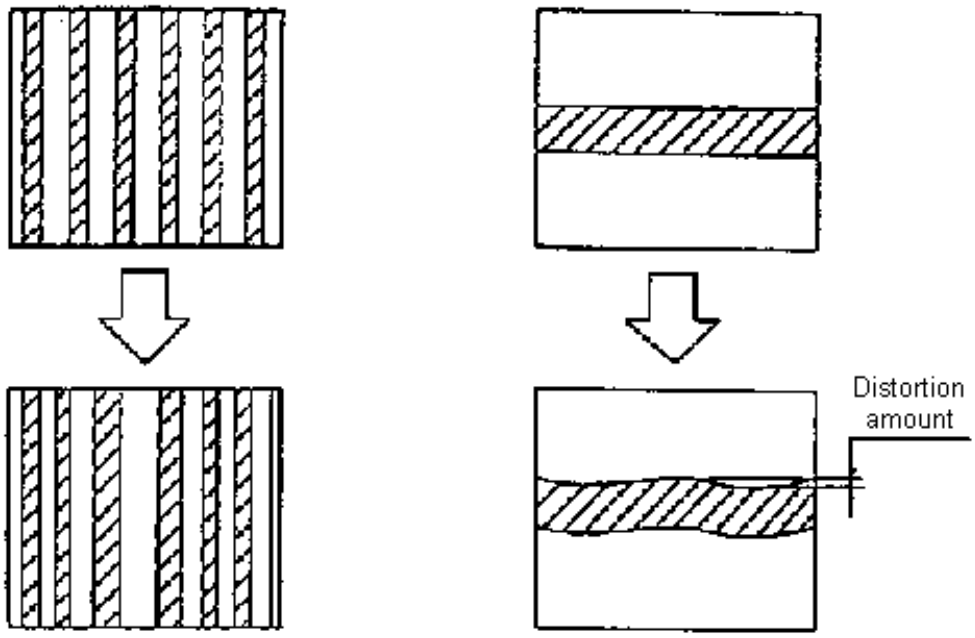

Image expansion/contraction

Image distortion

Figure 3-1: Power Frequency Stray Magnetic Field (AC Magnetic Field)

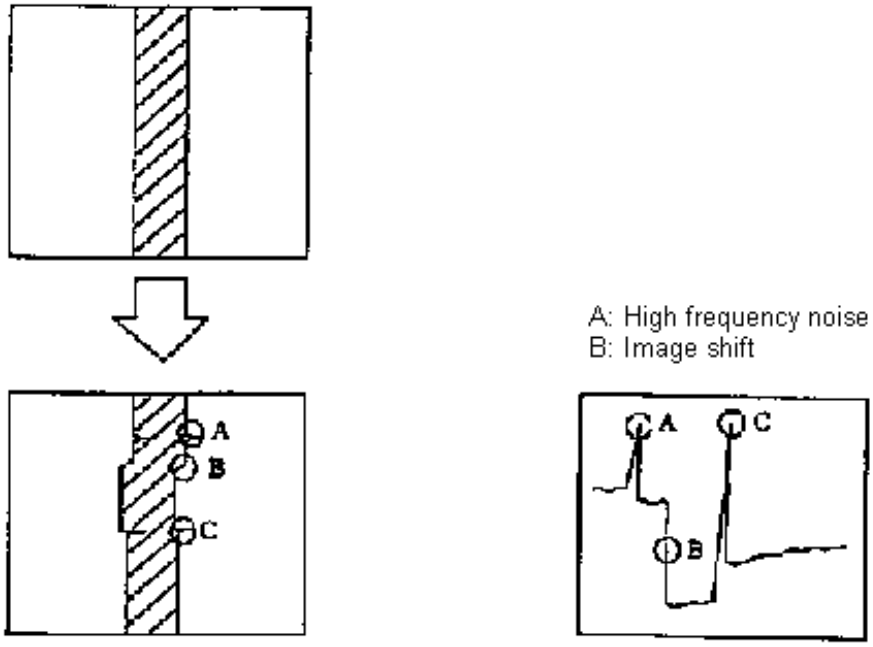

Image distortion locations

DC magnetic field fluctuations

Figure 3-2: Asynchronous Power Stray Magnetic Field (DC Magnetic Field)

3.1.7 Vibration

Before installing the instrument, measure floor vibration at the installation site. The image will not be disturbed if the conditions given in **Table 3.2** are met. The instrument performance will not be degraded on account of vibration in a reinforced concrete or steel frame building if there is no vibration source nearby such as large machine tools or transportation facilities (trains, etc) and if the instrument is placed on the first floor.

Vibration with 10 Hz or less

Table 3.2 Allowable Vibration

Allowable Value (X and Y direction)		Allowable Value (Z direction)	
Frequency (Hz)	Amplitude (µmp-p)	Frequency (Hz)	Amplitude (µmp-p)
0.5	10	0.5	15
1.0	10	3.0	15
1.5	5	3.5	15
2.0	6	4.0	12
2.5	8	4.5	10
3.0	10	5.0	8
4.0	10	5.5	8
5.0	10	6.0	10
10.0	10	10.0	10

CAUTIONS:

- The allowable amplitude corresponds to an image sway of 0.2 mm max. on a photograph taken at a magnification of 600,000 x.
- The vibration waveform is regarded as a sine wave. Each frequency component is concentrated on the peak frequency for waves that are not sinusoidal.
- Current technology cannot eliminate ultra low frequency vibrations with a frequency of 1 Hz or less.
- A linear line connecting each allowable value is interpolated for areas in the range of 1 Hz to 10 Hz.
- Contact HIG if the floor vibration exceeds the allowable values. (Measure the vibration if a harmful vibration is suspected.)

Vibration with 10 Hz or more

Contact HID if the peak vibration exceeds 10 Hz.

3.1.8 Room Temperature and Humidity

Room temperature: 15°C to 25°C
Temperature fluctuations should be less than 5°C during operation of the instrument.

Humidity: 60% or less

3.1.9 Power Line and Electric Field Noise

Image troubles may occur when a device listed in **Table 3.3** or its power line is installed nearby, or even if it is distant, if it is a heavy-duty type. When selecting of installation site, absence of such noise sources shall be confirmed. When equipment energized by power of a frequency different from the commercial frequency employed on the SEM/XMA (or the power line for such equipment) is located nearby, power synchronous scanning will become ineffective.

Table 3.3 Source of Artificial Noise (external noise interference)

Classification		Cause	Interference Source
Small electrical appliance (household apparatus)	Electrical device with contact	Discharge noise (spark, arc)	Contact (neon sign, decoration lamp), relay, electromagnetic conductor, thermostat (electric kotatsu, electric mat, refrigerator, iron), sash register
	Device with commutator motor	Discharge noise (spark, arc), noise by sliding and contacting	Electric drill, dental engine, sewing machine motor, vacuum cleaner, mixer, razor, massager
	Discharge tube	Glow discharge	Neon discharge tube, high pressure mercury discharge lam
	Control device with semiconductor	Phase control noise (transient noise)	Thyristor dimmer, inverter
High frequency facilities	Industrial high frequency facilities	Unnecessary signal ★	Industrial high frequency heater, high frequency welder, microwave oven
	High frequency medical facilities	Unnecessary signal ★	VHF medical equipment, UHF medical equipment, surgeon's electric knife
	Ultrasonic facilities	Unnecessary signal ★	Flaw detector, sounding machine, fish finder, ultrasonic washer
Power facilities	Power line (transmission line)	High voltage, large current	Commercial frequency induction (electrostatic induction, electromagnetic induction, ground leakage current)
		Discharge noise (spark, arc)	Corona noise, insulator of poor insulation, poor contact [arc discharge] by corrosion of metal
	Electric railways	Discharge noise (spark, arc)	Trolley car, vehicle devise, rectifier
		Reflection	Reflection by vehicle
Internal combustion engine	Automobile	Discharge noise	Ignition system
		Miscellaneous	Generator, voltage regulator, wiper, horn, winker
Wireless communication equipment	High power transmission equipment	Signal radiation ★	Broadcasting equipment, radar equipment
		Unnecessary radiation	High frequency from transmitter

★ Signal in own system constitutes interference with other systems.

3.1.10 Sound Waves

Both low and high frequency sound waves (air vibration) are harmful to the instrument and will cause image interference. When selecting an installation site, it must be checked whether there is a noise source. If such equipment exists near the SEM, the noise level must be measured. If conversation is possible only in a loud voice due to noisy equipment, sonic disturbance may occur.

The allowable noise level at the installation site is 80 dB (C property) with a frequency of 200 Hz or less. In the area of 200 Hz or more, image distortion may occur even with 70 dB (C property) depending on its frequency. It is necessary to analyze the sound to determine the impact of each noise frequency of 200 or more

3.1.11 Space and Floor Requirements

Space

The desirable dimensions are 3.5 m x 3.5 m or more. The installation layout using a minimum installation area is shown in **Figure 3-3**.

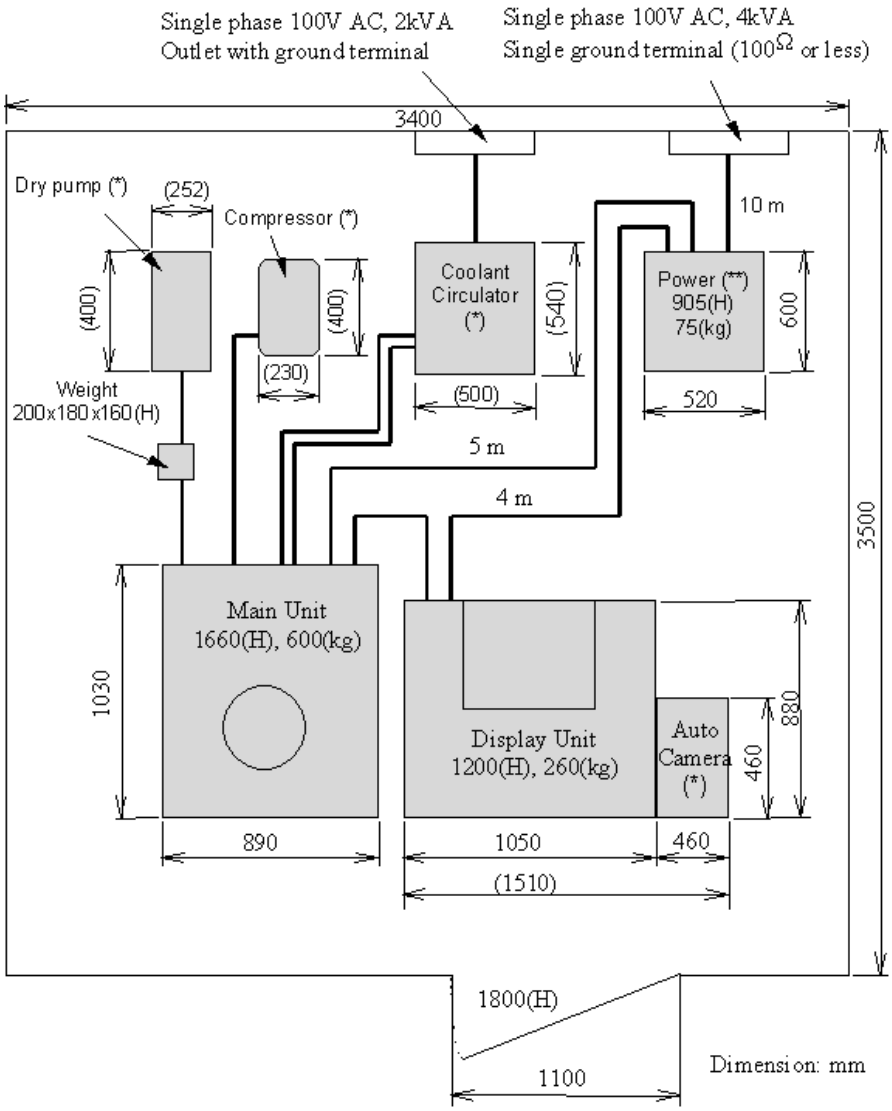

Figure 3-3: Installation Layout using Minimum Area

NOTE:

- The dotted line indicates the installation space for the cooling water circulator (reference value). The actual installation space will vary depending on the maker and model of the cooling water circulator.
- Wiring and tubing pulling sections need the space of 300 mm.
- The supply and drainage water must meet the specification described in section **3.1.4 (Water Supply and Drainage)**.
- The dimension of the dry pump is for ESDP12. (Dry pump: supplied by HIG sales)
- The CE S2 power unit (**) is 1,443 mm high and weighs 145 kg.

Entrance Dimension

The entrance dimensions must be 0.9 m (width) x 1.7 m (height) or more.

Floor Strength

$$\frac{FloorStrength(N/m^2)}{3} \geq \frac{AppratusTotalWeight(Kg)x9.8}{FloorArea(m^2)}$$

3.1.12 Items Needed at Installation Site

The items needed at the installation site are shown in **Table 3.4**.

Table 3.4 Items Needed at Installation Site

No.	Item	Specification	Notes
1	Power	Single phase 100V ± 10V	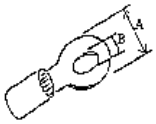 Crimp terminal A: 9.5 mm dia. B: 5.3 mm dia.
	Capacity	4.0 kVa	
	Ground	No. 3 type single ground	
2	Water flow	1 – 1.5 l/min.	If the cooling water circulator is used, use a Rc 3/8 tapered female screw for the drain port.
	Water pressure	50 – 100 kPa	
	Water temperature	10 – 20°C	
	Faucet	Rc 3/8 x 1 (Tapered female screw)	
3	Dry pump	Evacuation speed: 12.5 m^3/h or more Ultimate pressure: 1.6 Pa or more	It is recommended that ESDP12 (made by Edwards Co.) be used.
4	N_2 gas pressure (when using N_2 gas leak)	10 – 20 kPa	The filter, decompression valve and proper ventilation are needed.
	Pipe connection plug	Rc ¼ x 1 (Tapered male screw)	
5	Compressed air pressure	350 – 500 kPa	The filter, decompression valve, pressure meter and pressure protection (reducing pressure) are needed.
	Pipe connection plug	Rc ¼ x 1 (Tapered male screw)	

NOTE: Item No. 5 is required for the CE and S2 units.

NOTE: The autotransformer is assembled into the power unit for CE and S2 Units.

3.2 Unpacking

3.2.1 Unpacking

1. Remove the top transport wooden frame (1 ea) and side wooden frames (4 ea).
2. Remove the transport wood to support the instruments attached to the bottom transport wooden frame (1 ea).
3. Remove all transport vinyl covers.
4. Remove everything from the corrugated cardboard box.

3.2.2 Carrying-in

Move the instrument to the installation site manually or by forklift. Do not vibrate or give a strong impact to the instrument while carrying-in. Move the instrument carefully because many parts are needed to be handled with care.

3.2.3 Parts Quantity Check

Check the number of delivered parts against the packing list.

3.3 Setup

3.3.1 Instrument Layout

Install the instrument according to **Figure 3-3**.

3.3.2 Setup Procedures

Standard Unit

1. Remove the TMP retaining board attached to the main unit, the anti-vibration rubber retaining bolt and its spacer.
2. Connect the cables and the connectors to the power unit, the main unit and the display unit according to the S-5200 Assembling and Wiring Diagrams (1) and (2) (**Figures 3-4 and 3-5**).
3. Connect the dry pump to the main unit using the rubber vacuum hose and clamp.
4. Connect the power cables of the compressor and dry pump to the CMP and DP terminals on the power unit.
5. Check the power and grounding, and connect the power source and grounding conductor. If the service voltage is other than 100V AC, connect the unit to a user supplied voltage converter (such as an autotransformer).
6. Connect the main unit to the cooling water device using the attached coolant resistant hose.
7. Connect the main unit to the compressed air equipment using the attached pressure resistant tube.
8. Turn ON the power on the breaker panel.
9. Turn ON the breakers on the common power unit.
10. Turn ON the power of the ion pump to evacuate the electron gun section. Wait until the vacuum of the ion pump reaches to 1 x 10^{-5} Pa or less and perform electron gun baking. See **Figure 10-1**.

11. Turn ON the EVAC SW to evacuate.
12. Turn ON the Display SW and check that the instrument operates normally.

CE and S2 Units (Compressor and dry pump to be obtained locally.)

1. Remove the TMP retaining board attached to the main unit, the anti-vibration rubber retaining bolt and its spacer.
2. Connect the cables and the connector to the common power unit, the main unit and the display unit according to the S-5200 Block Diagrams (1) and (2) (**Figures 3-4** and **3-5**).
3. Connect the dry pump power cable according to the dry pump installation manual.
4. Connect the dry pump to the main unit using the vacuum rubber hose and clamp.
5. Check the power and grounding, and connect the power source and grounding conductor. Verify that the autotransformer primary side connection in the power unit is applicable to the service power voltage.)
6. Connect the main unit to the cooling water device using the attached coolant resistant hose.
7. Connect the compressor power cable according to the compressor installation manual.
8. Connect the main unit to the compressed air equipment using the attached pressure resistant tube.
9. Turn ON the power on the switchboard.
10. Turn ON the breakers on the common power unit.
11. Turn ON the power of the ion pump to evacuate the electron gun section. Wait until the vacuum of the ion pump reaches to 1×10^{-5} Pa or less and perform electron gun baking. See **Figure 10-1**.
12. Turn ON the EVAC SW to evacuate.
13. Turn ON the Display SW and check that the instrument operates normally.

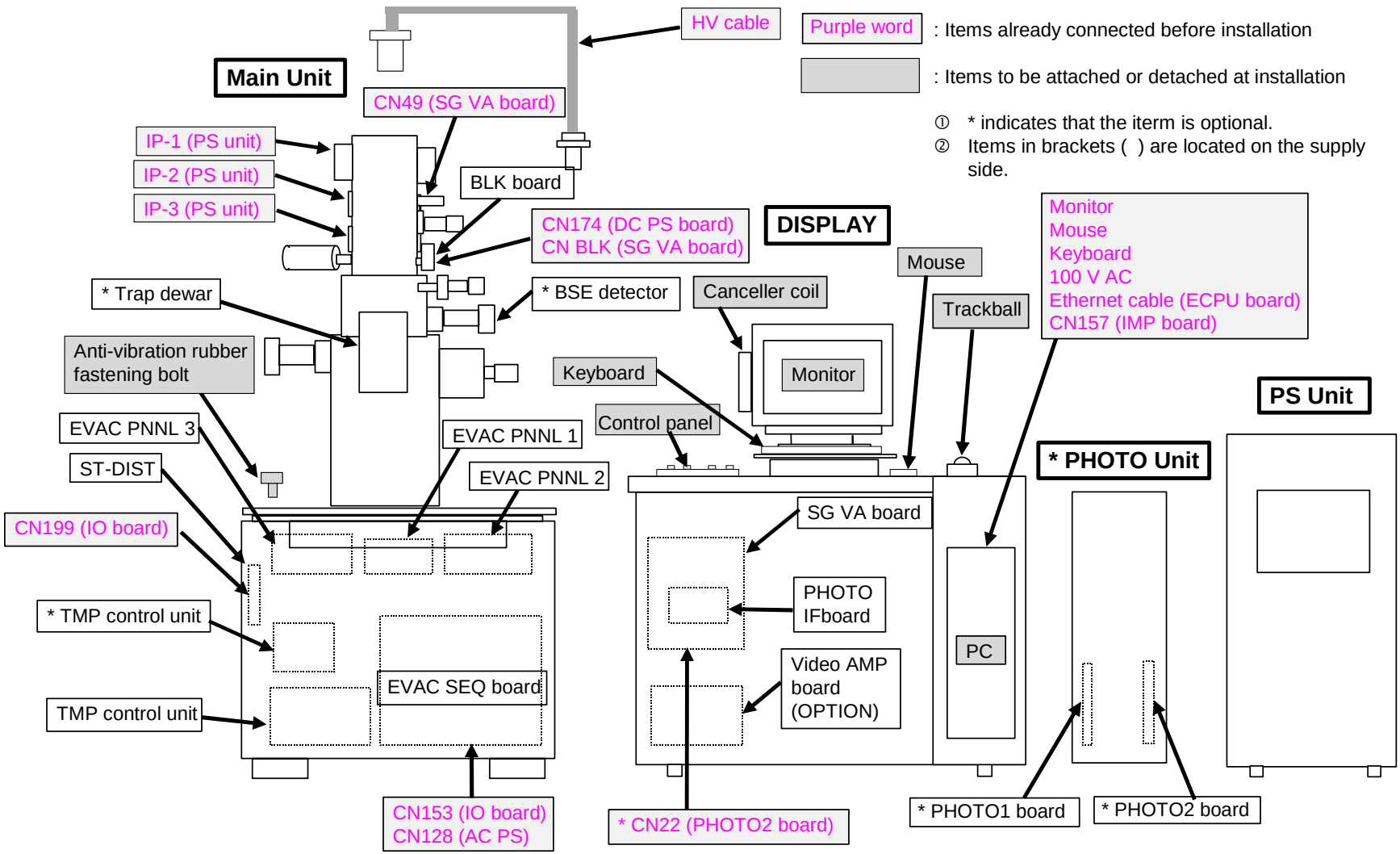

Figure 3-4: S-5200 Block Diagram (1)

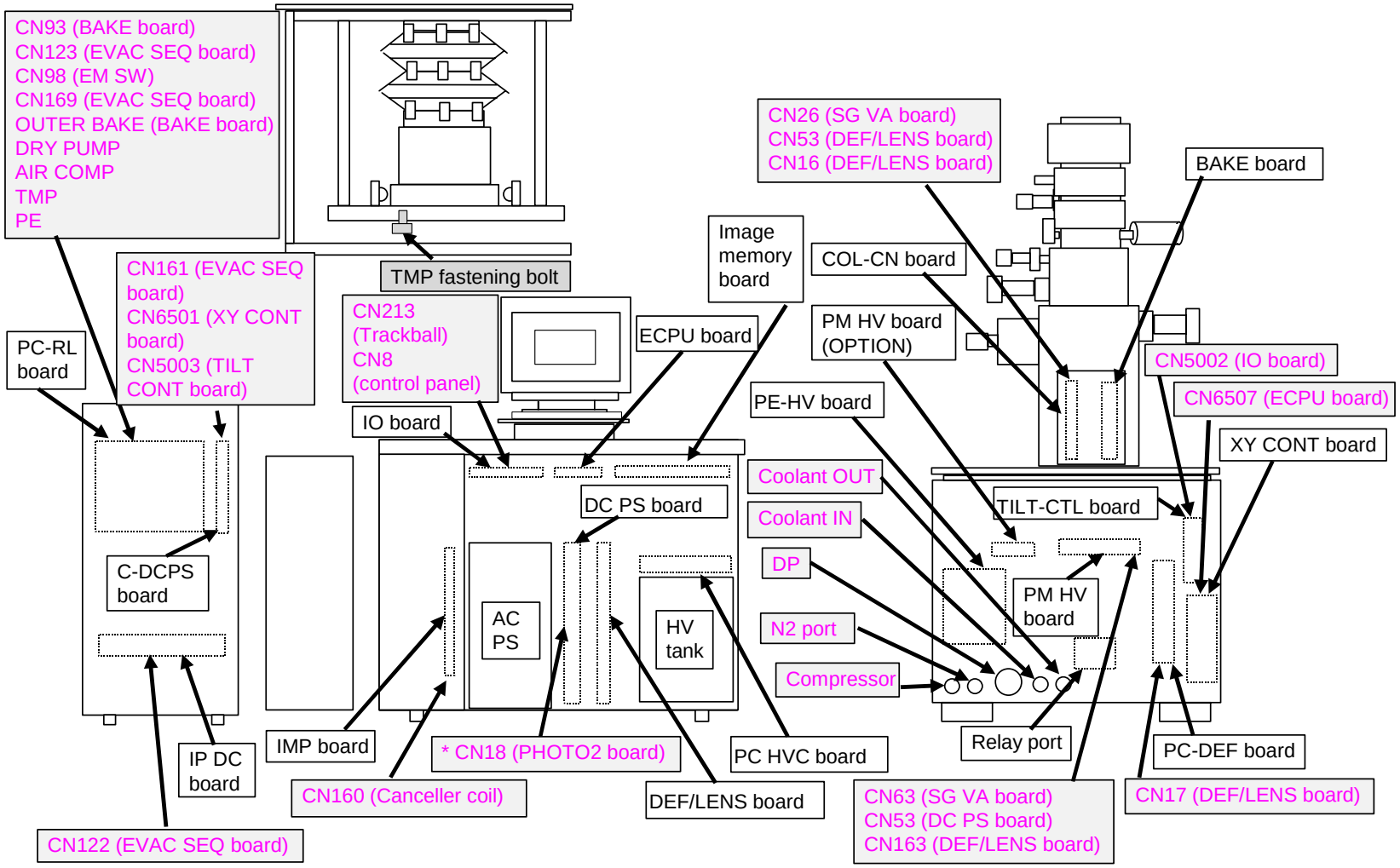

Figure 3-5: S-5200 Block Diagram (2)

3.3.3 Display Modification (For S2 Unit)

The procedure to modify a standard display (**Figure 3-6**) to a S2 display (**Figure 3-7**) is shown below.

1. Remove the screws (4 ea) secured the display section and the PC storage section.
2. Pull the PC storage section forward.
3. Remove the left side cover from the PC storage section and install it by rotating it 180°.
4. Secure the display section and the PC storage section using the screws removed in step 1.
5. Secure the table extension support and table support using the supplied screws (4 ea.)
6. Remove the screws (4 ea) securing the display section to the monitor table.
7. Remove the monitor table from the display section, remove the top cover from the display section and attach it by rotating it 180°.
8. Pull the monitor table forward as shown in **Figure 3-7** and secure the display section and the monitor table using the screws (4 ea) removed in step 5.

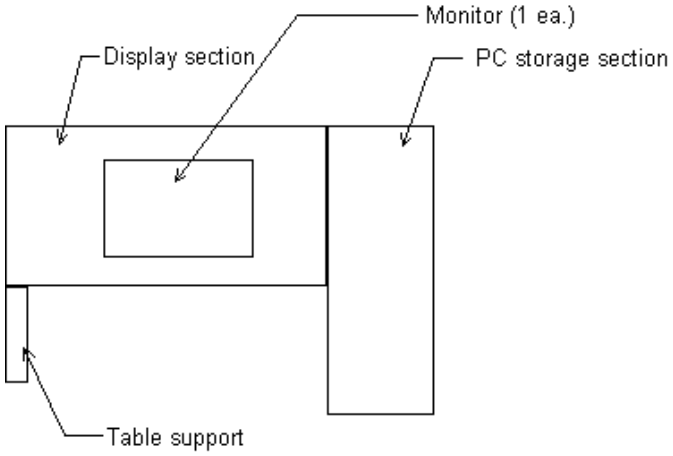

Figure 3-6: Standard Display (Top View)

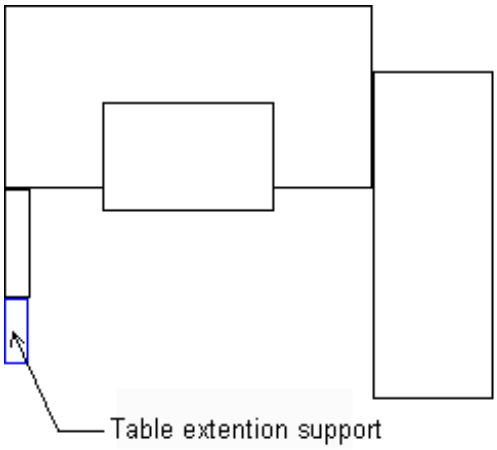

Figure 3-7: S2 Display (Top View)

3.4 Installation Summary

3.4.1 Installation Test

Resolution Test

The secondary electron image resolution must be 0.5 nm for the conditions (1) and 1.8 nm for the conditions (2) using the measurement conditions and methods described below.

[Measurement Conditions]

	(1)	(2)
Accelerating voltage	30 kV	1 kV
Display magnification	600,000 x	150,000 x
Specimen height (Distance between specimen and pole piece bottom)	0.5 mm (2.5 mm)	1.5 mm (1.5 mm)
Condenser lens 1	5 - 10	5 - 10
Observation mode	Normal	Normal
Objective lens movable aperture	50 µm dia. (No. 2, 3)	50µm dia. No. 2, 3)
Specimen	Platinum particles on carbon	Au-coated magnetic tape

NOTE: Only specimens approved by HID can be used.

[Measurement Methods]

- Without the photo CRT unit (Standard configuration)

  Compare the image with a standard supplied image on the viewing monitor and verify that they are identical.

  Image acquisition conditions: Pixel: 640 x 480, Acquisition time: 80 sec

- With the photo CRT unit (Optional configuration)

  Record a resolution image in direct photo mode (exposure time: 80 sec), and check the gap between the particles on the photograph.

  The gaps must be 0.30 mm for the conditions (1) and 0.27 mm for the conditions (2).

Magnification Test

Check that the magnification is within ± 10 % of the display magnification, using the measurement conditions and methods below.

[Measurement Conditions]

Accelerating voltage: 5.0 kV
Display magnification: 2,000 x
Specimen height: 0.0 mm
Condenser lens 1: 5
Observation mode: Normal
Specimen: 1,000 grids (25.4 µm/pitch)

[Measurement Methods]

- Without the photo CRT and CD measurement units (Standard configuration)

  Measure the grid width with the coarse measurement cursor (measurement resolution 0.5 μm).

  The difference between the measured vale and the actual value must be within ± 10%.

- With the photo CRT unit (Optional configuration)

  Measure the grid width on the photograph.

  The difference between the display magnification and the photographing magnification must be within ± 10%.

- With the CD measurement unit (optional configuration)

  Measure the grid width with the measurement cursor (measurement resolution 0.1 μm).

  The difference between the measured vale and the actual value must be within ± 10%.

NOTE: With the photo CRT and CD measurement units attached, the actual image magnification should be measured on the photograph. Also, only specimens approved by HID can be used.

Evacuation System

- Vacuum

  Measure vacuum for the electron gun, first intermediate and second intermediate chambers with a vacuum meter.

  The vacuum must be measured as shown below.

  Electron gun chamber: 1×10^{-7} Pa or less
  First intermediate chamber: 2×10^{-6} Pa or less
  Second intermediate chamber: 1×10^{-5} Pa or less

- Evacuation speed

  Measure the duration from when the specimen is exchanged to when the high voltage can be applied.

  The time must be 1 minute or less.

Structure Check

- Specimen goniometer stage motion range

  Move the specimen goniometer stage throughout its range and check the range of motion.

  X-axis: ±3.5 mm
  Y-axis: ±2.0 mm
  Z-axis: ±0.3 mm
  T-axis: ±40°

- Movable aperture motion check

  Shift the objective lens movable aperture and the beam monitor aperture from No. 0 to No. 4, and check that they can move smoothly.

Specimen Exchange

Check that the specimen can be moved from the Home Position to the specimen exchange positions described below. Also, check that the specimen can be exchanged smoothly.

Specimen exchange positions:

X-axis: 0 mm
Y-axis: 0 mm
T-axis: 0°

Electron Optics System

- Mechanical axis alignment
  Check that the electron gun and condenser lenses (first and second) can be aligned smoothly.
- Objective lens astigmatism correction
  Check that the astigmatism can be corrected in the conditions described below.

  [Measurement Conditions]

Accelerating voltage:	0.5 kV
Display magnification:	50,000 x
Specimen height:	0.0 mm
Condenser lens 1:	5
Observation mode:	Normal

Checking Each Section's Operation

- Frame memories must function normally.
- Memory photographing must work (with the photo CRT unit attached).
- Each function key must operate normally.

Safety Devices Operation Check

- At power failure, all valves must close.
- When the vacuum has degraded, the protection circuit must turn off the high voltage circuit.
- When water flow is interrupted, the high voltage circuit must be turned off.
- If the specimen holder is not inserted in the specimen chamber, high voltage cannot be applied.
- When the compressed air pressure drops below 250 kPa, all valves must close.

Other Checks

- Scratches or other anomalies must not be visible.
- The evacuation sequence must operate normally.
- The dry pumps and air compressor must be free from abnormal sounds.
- The objective lens cooling water must not leak.

Accessories

The accessories should be installed according to their installation section in the instruction manual shipped with the main unit.

3.4.2 Operation and Maintenance

Explain the operation and maintenance of the instrument based on the instruction manual.

3.4.3 Hand-over

Record each check item's result on the installation check form. Record the necessary items in the installation confirmation report, and obtain approval from the customer's person in charge.

This page intentionally left blank.

4 Hardware

4.1 System Configuration

The major components of the system are the main unit, the display unit, and the power supply unit. The main unit consists of the electron gun, the C1 and C2 lenses, the objective lens, the specimen goniometer stage, the secondary electron detector, and the evacuation system. The display unit consists of the power supplies, the control system, the image display system and the operation system. The power supply unit consists of AC distribution, evacuation system power supply, specimen goniometer power supply and ion pump power supply units.

4.1.1 Main Unit

Main Unit

The main unit cross sectional view is shown in **Figure 4-1**.

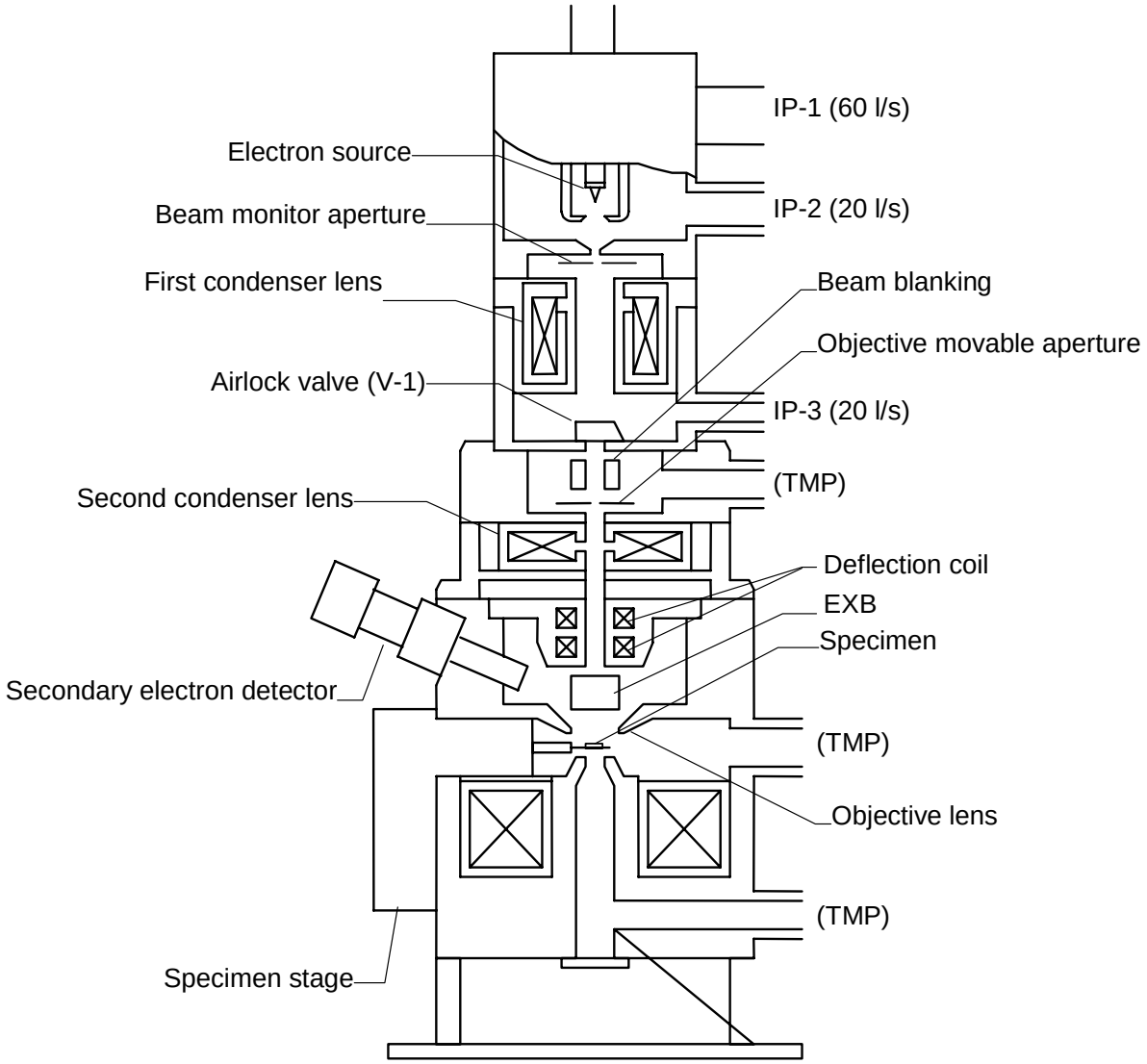

Table 4.1: Main Unit Structure Cross Sectional View

Evacuation System

Standard Evacuation System

The Standard Evacuation System is shown in **Figure 4-2**.

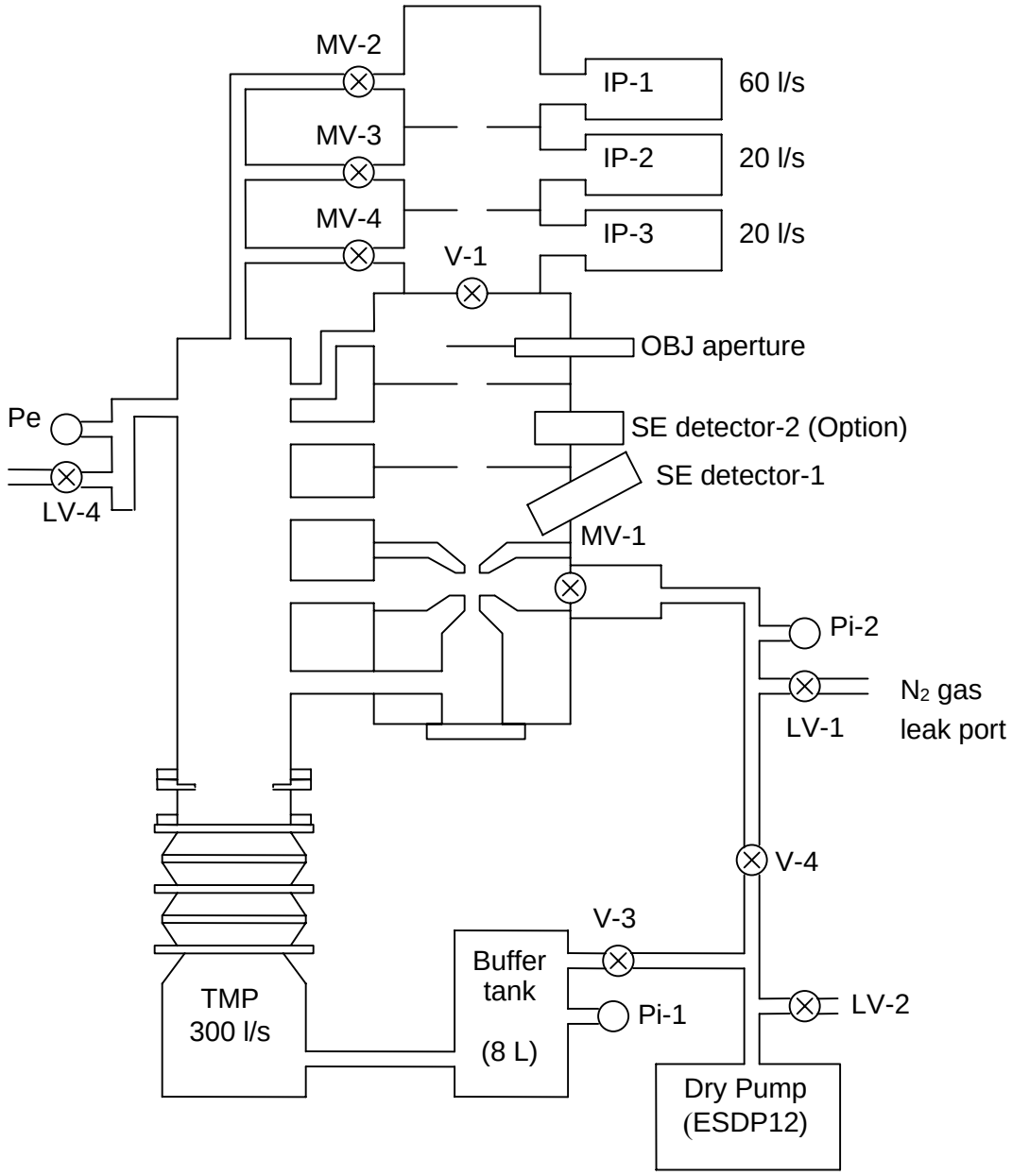

Figure 4-2: Standard Evacuation System Diagram

Tandem Evacuation System (Option)

Tandem Evacuation System is shown in **Figure 4-3**.

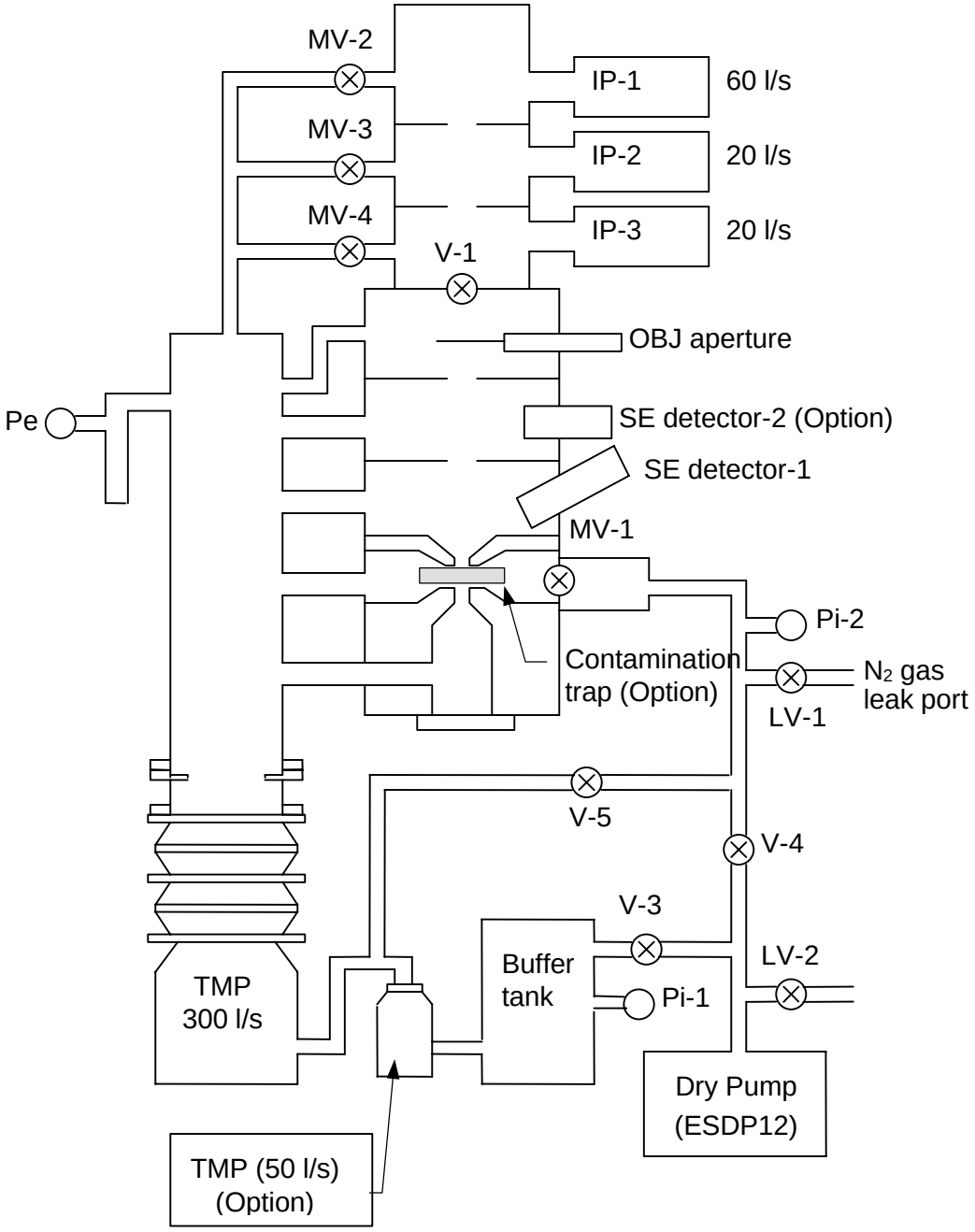

Figure 4-3: Tandem Evacuation System Diagram

4.1.2 Display Unit

The Display Unit Block Diagram is shown in **Figure 4-4**.

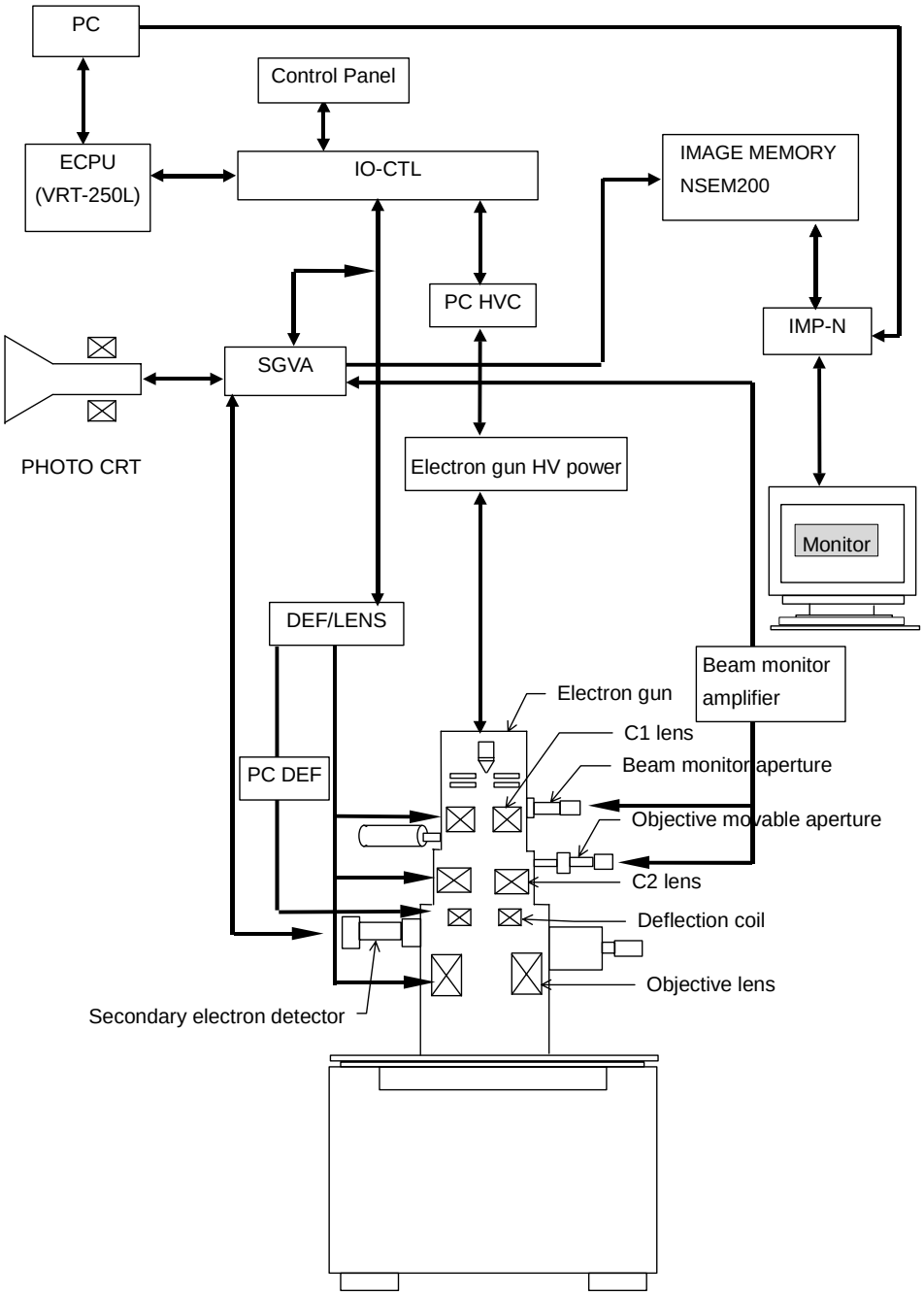

Figure 4-4: Display Unit Block Diagram

4.1.3 Power Supply Unit Block Diagram

The Power Supply Unit Block Diagram is shown in **Figure 4-5**.

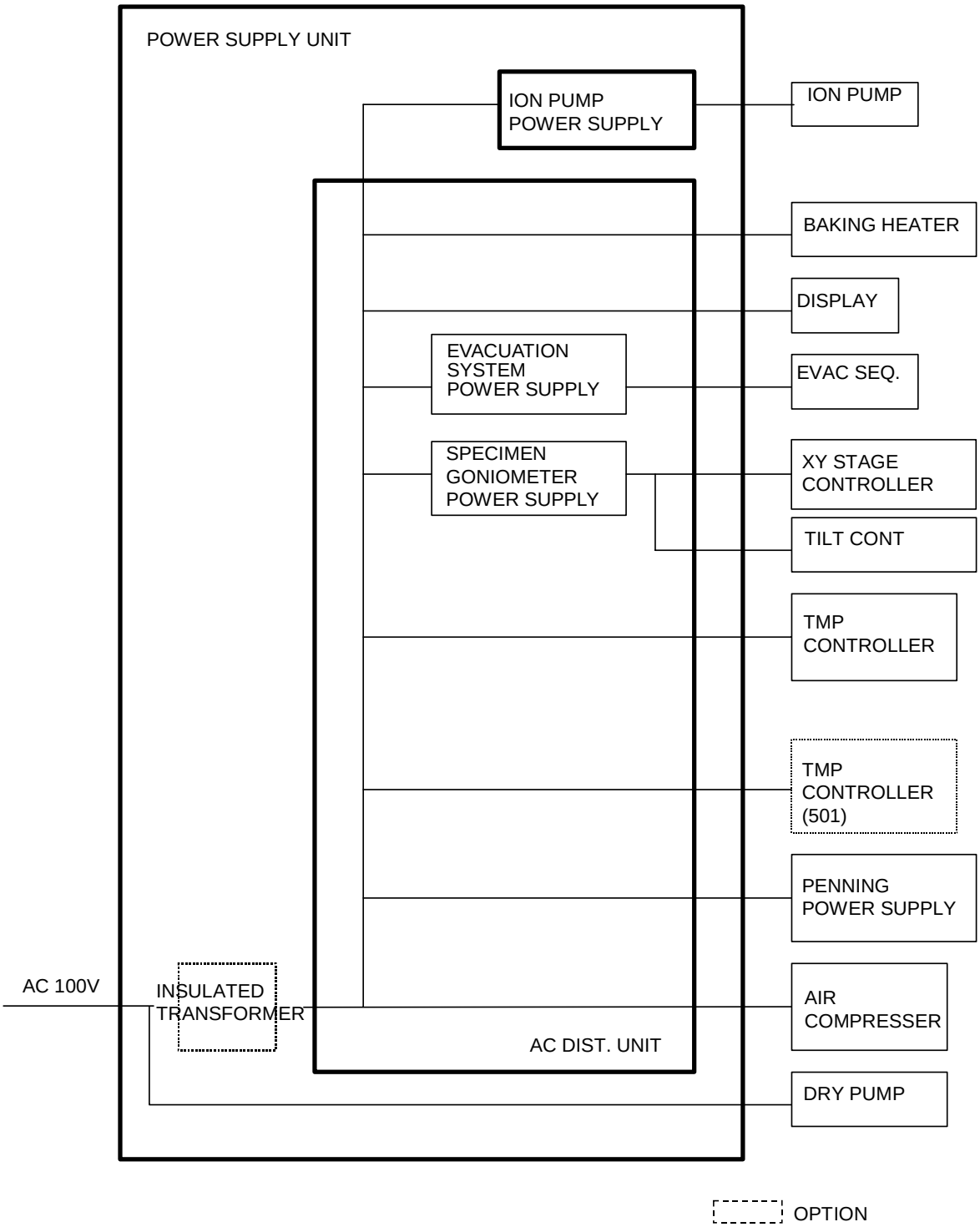

Figure 4-5: Power Supply Unit Block Diagram

4.2 Basic Principals

4.2.1 Main Unit Basic Principals

Electron Gun

The field emission electron gun consists of the 1st and 2nd anodes. The extracting voltage is applied between the cathode and the 1st anode. Electrons are emitted from the cathode. Furthermore, the electrons will be accelerated with an accelerating voltage. The surface of the cathode must be cleaned occasionally to remove absorption gas.

Condenser Lens (C1, C2 Lens)

The condenser lens is an electromagnetic lens that is used to focus the electron beam emitted from the electron gun. It is mainly used to control the reduction condition of the irradiated electron beam incident on the objective lens and the beam current.

Objective Lens

The objective lens is an electromagnetic lens that is used to focus a minimum diameter electron beam on the specimen.

Specimen Goniometer Stage

The specimen goniometer stage is a side-entry type. It consists of X, Y, Tilt and ΔZ mechanisms.

Beam Monitor Aperture

The beam monitor aperture detects the probe current in order to correct brightness changes due to probe current fluctuations. It detects the probe current at low accelerating voltages of 7.4kV or less.

Objective Movable Aperture

The objective movable aperture is used to optimize the electron optics by controlling the electron beam current and opening angle. It detects the probe current like the beam monitor aperture. However, it detects the probe current at high accelerating voltages of 7.5kV or more.

Beam Blanking

The beam blanking intercepts the electron beam so that it will not shine on the specimen when electron beam scanning is not being used in order to reduce contamination of the specimen.

Deflection Coil

The deflection coil is used to control the electron beam position. There are two types of deflection coils: one is to scan the electron beam on the specimen in order to obtain the secondary image and another is to deflect the electron beam in order to adjust the axis.

ExB

The ExB is used to prevent the primary beam from deflecting (axis shift) due to the electric field of the secondary electron detector.

Secondary Electron Detector

The secondary electron detector consists of a scintillator to convert secondary electrons into light and a photo multiplier tube. It is mainly used to intercept the secondary electrons emitted from the specimen when scanned with the electron beam.

Evacuation System

The ion pumps are used to evacuate the electron gun section. The turbo molecular pump and dry pump are used to evacuate the specimen chamber, etc.

4.2.2 Display Unit Basic Principals

PC

It is mainly used to operate the instrument and record the images.

ECPU (VRT-250L)

It is used to receive control commands from the PC and convert them into signals to control each section.

IO-CTL

It is used to convert the control signals from the ECPU into the proper I/O control signal for each unit.

Image Memory (NSEM200)

It is used to digitize the analog image data from the SGVA, store them in the image memory, and transfer them to the IMP-N.

IMP-N

It is used to superimpose the digital image data from the Image Memory (NSEM200) onto the PC's GUI.

SGVA

It is mainly used to control the deflection scanning signal and the video signal.

DEF/LENS

It is mainly used to control the deflection coil that deflects the current for each lens and the electron beam.

PC HVC

It is used to control the accelerating voltage, the extracting voltage and the emission current.

4.2.3 Power Supply Unit Basic Principals

Ion Pump Power Supply

5.2kV DC is supplied to the ion pump using a step-up transformer and a rectification circuit.

AC Distribution Unit

100V AC is supplied to the baking heater, the display and the TMP controller.

Specimen Goniometer Power Supply

5V, ±15V and ±24V DC are supplied in order to operate the X and Y stage controllers and the Tilt controller.

Evacuation System Power Supply

5V, 12V, ±15V and 24V DC are supplied in order to operate the EVAQ SEQ.

5 Electric Theory

5.1 System Illustrations

5.1.1 Power Supply Unit

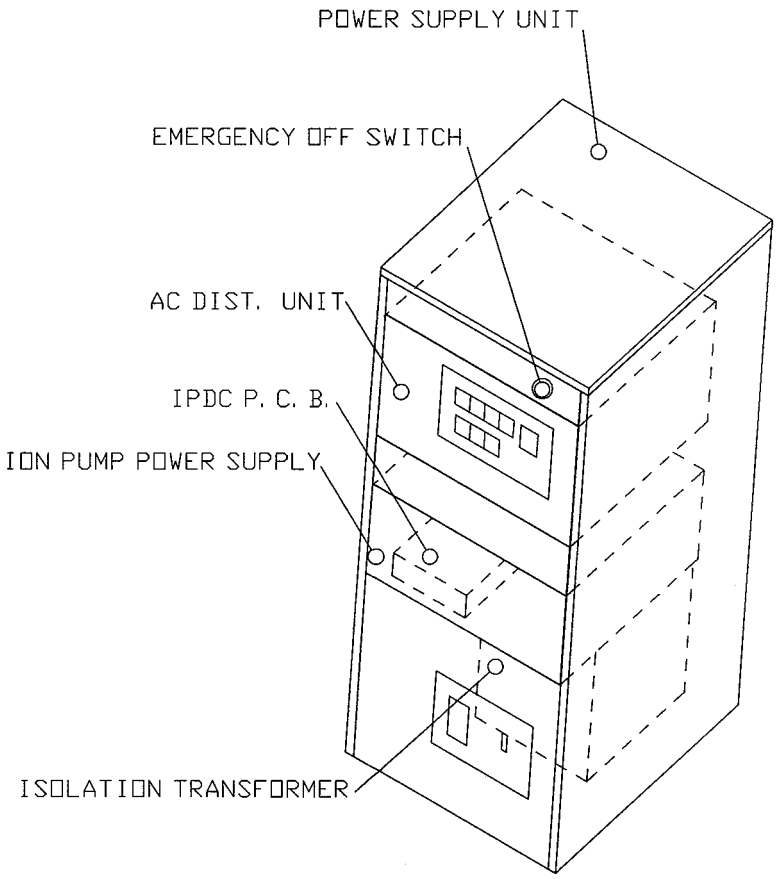

Figure 5.1: Power Supply Unit

5.1.2 Main Unit

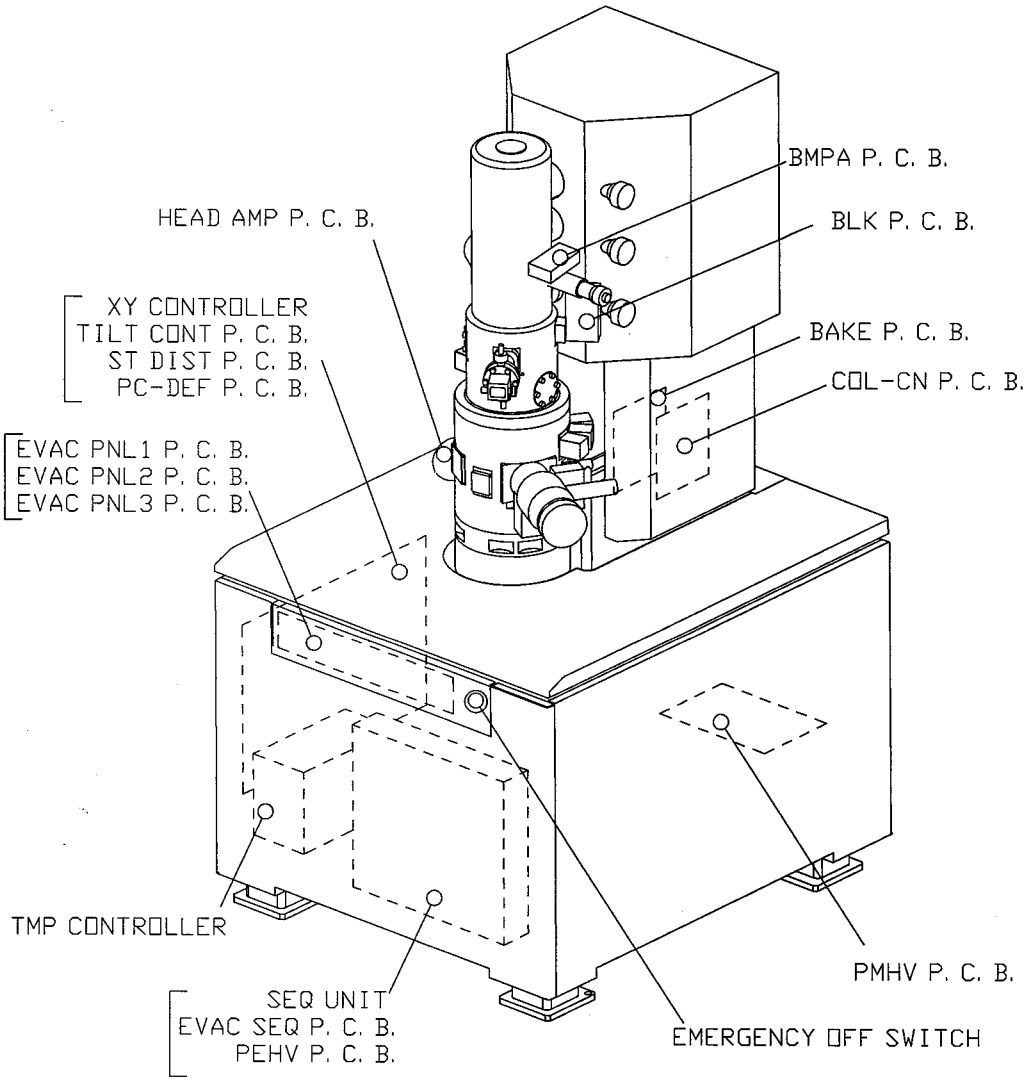

Figure 5-2: Main Unit

5.1.3 Display Unit

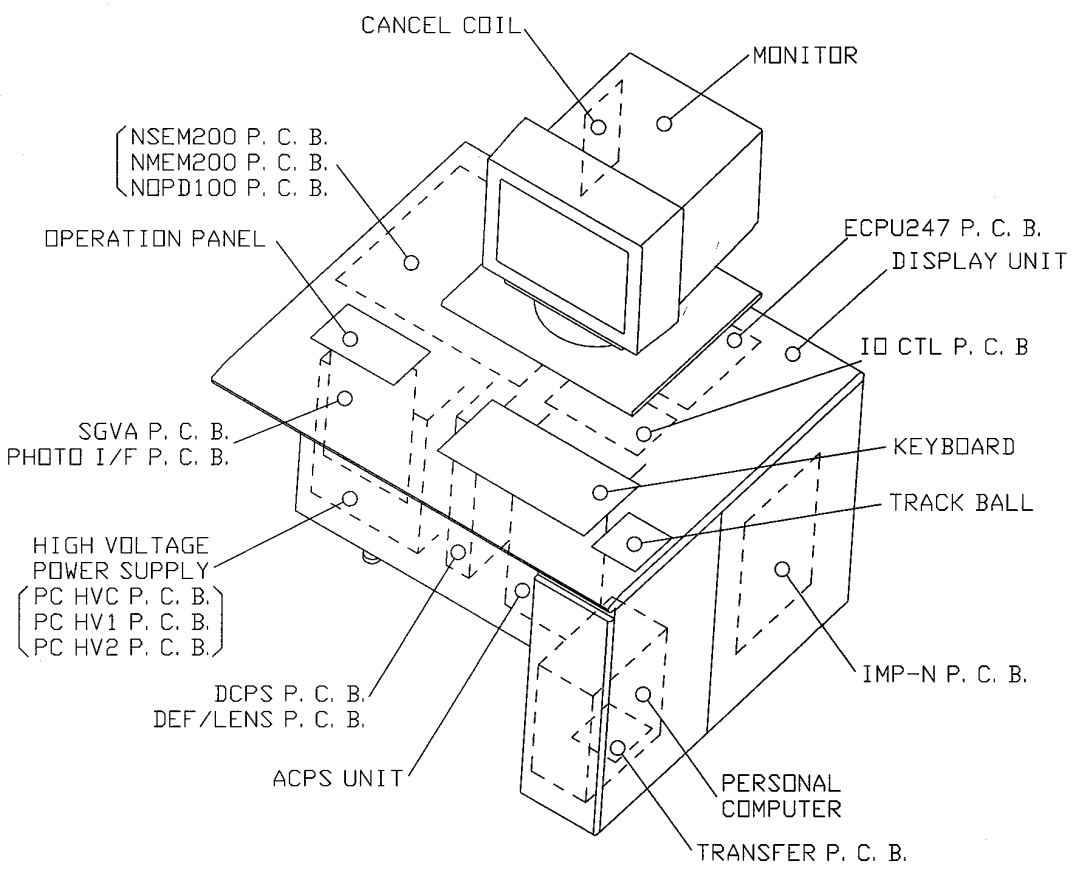

Figure 5-3: Display Unit

5.2 AC Power: Wiring Diagrams and Fuses

5.2.1 Power Supply Unit

Table 5-1: Fuses List (only AC line)

Unit	Fuse No.	Type	Manufacturer	Specifications	Approval
AC Dist	F3, F4	218 001	Little Fuse	250V AC/1A	UL, IEC, SEMKO
	F5, F6	218 001	Little Fuse	250V AC/1A	UL, IEC, SEMKO
	F9, 10	218 3.15	Little Fuse	250V AC/3.15A	UL, IEC, SEMKO
PC-RL	F1	218 001	Little Fuse	250V AC/1A	UL, IEC, SEMKO
	F4, F5	218 005	Little Fuse	250V AC/5A	UL, IEC, SEMKO
	F6, F7	218 010	Little Fuse	250V AC/10A	UL, IEC, SEMKO
IP PS	F1 – F6	218 001	Little Fuse	250V AC/5A	UL, IEC, SEMKO
Bake	F1	SM8	Nagasawa Denki	125V AC/8A	UL, CSA
	F2 – F9	218 3.15	Little Fuse	250V AC/3.15A	UL, IEC, SEMKO

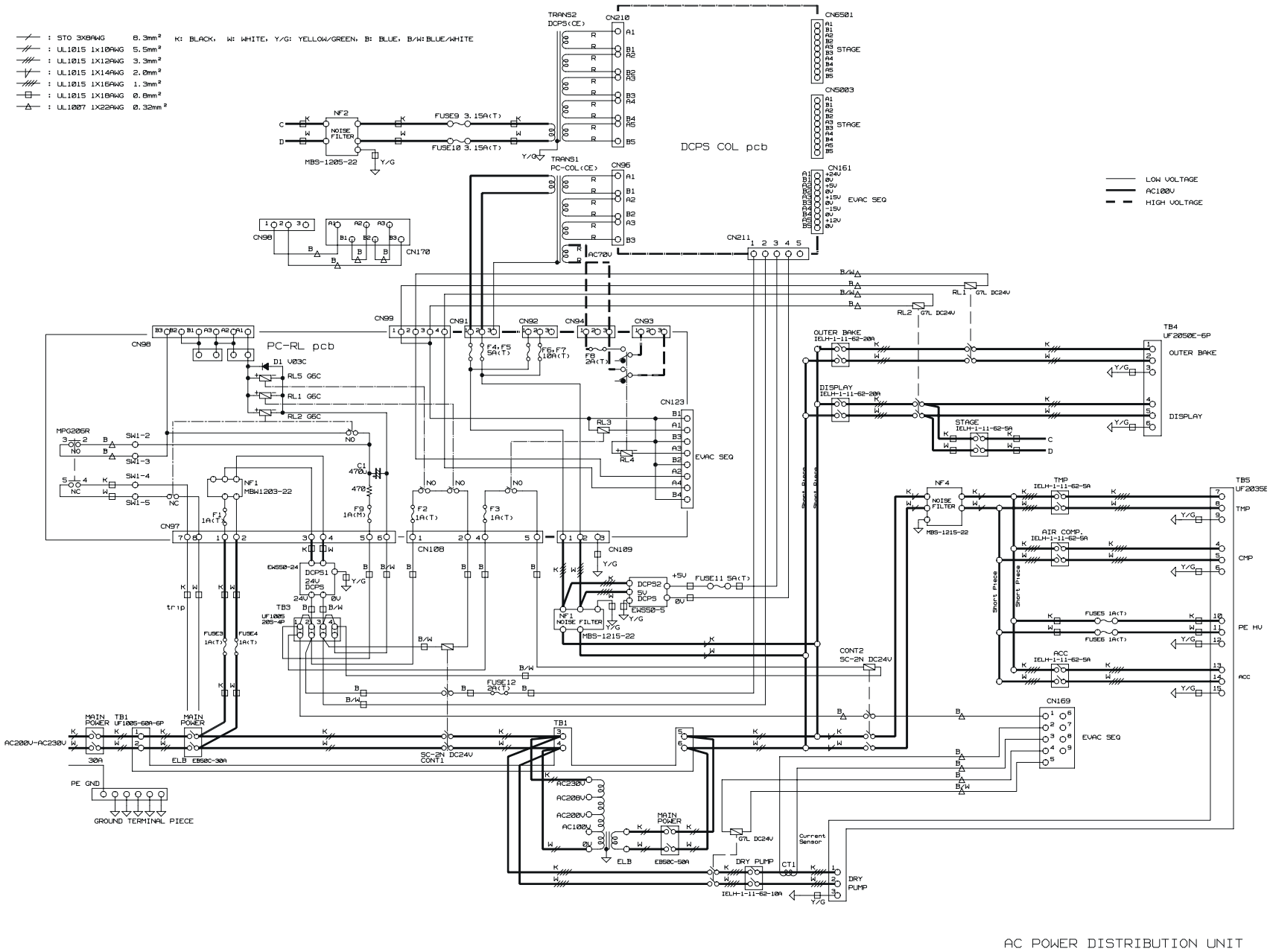

AC Power Distribution Unit

5.2.2 Display Unit

Unit	Fuse No.	Type	Manufacturer	Specifications	Approval
AC PS	F1, F2 F5 – F8	218 005	Little Fuse	250V AC/5A	UL, IEC, SEMKO
	F3, F4	218 3.15	Little Fuse	250V AC/3.15A	UL, IEC, SEMKO

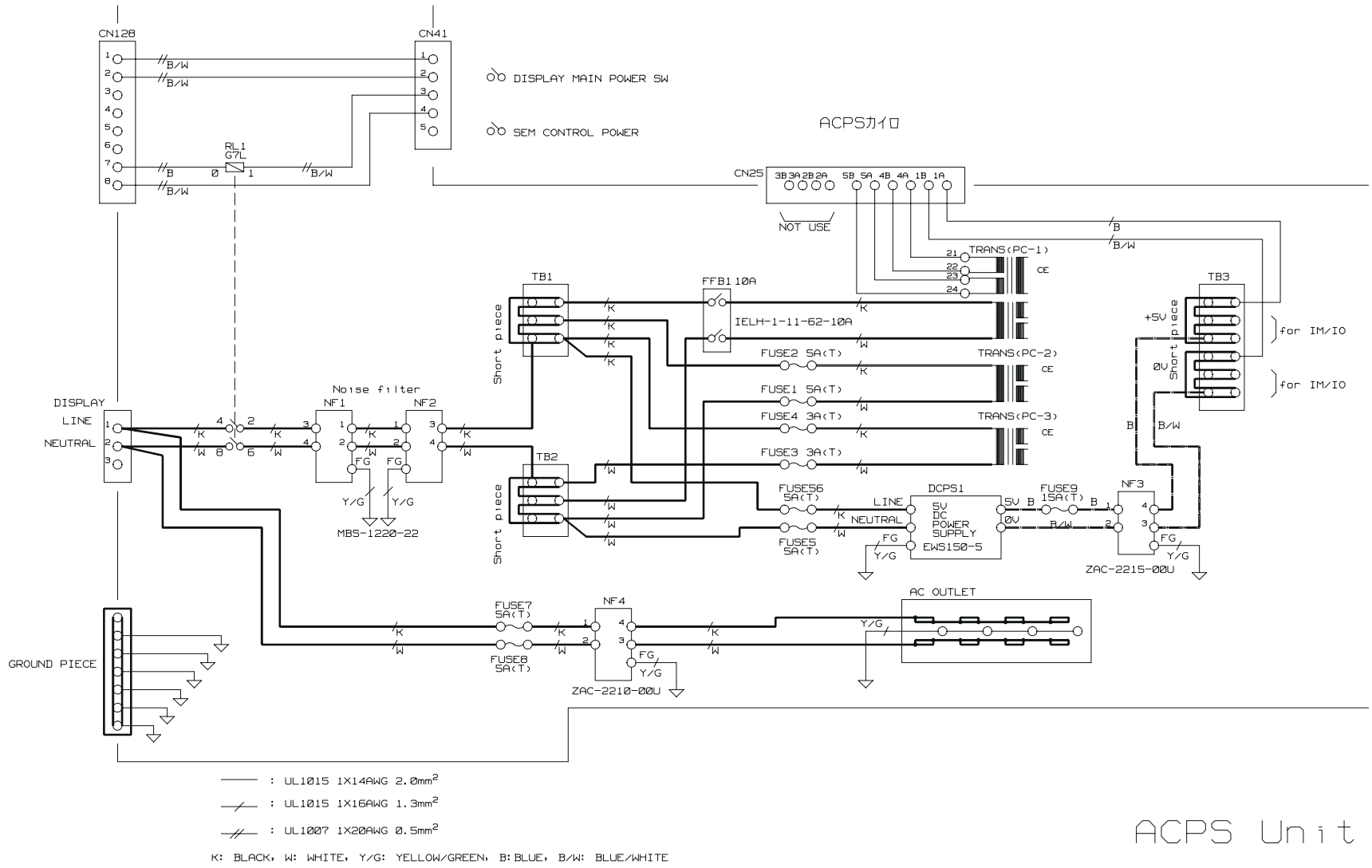

AC Power Supply Unit

5.3 DC Power Supply Systems

5.3.1 Power Supply Unit

Table 5.3 C-DCPS PCB

	Use		Check Terminal	Display LED	Fuse
EVAC. SEQ	Analog	+15V/1A	TP1	LD1	F1, F9
		-15V/1A	TP3	LD2	F2, F10
	ROM Write	+12V/1A	TP4	LD3	F3, F11
STAGE	Logic	+5V/2A	TP6	LD4	F4, F12
	Analog	+15V/1.6A	TP8	LD5	F5, F13
	Analog	-15V/1.6A	TP10	LD6	F6, F14
	★★	+24V/1.4A	TP11	LD7	F7, F15
	★★	-24V/1.4A	TP13	LD8	F8, F16

5.3.2 Display Unit

Table 5-4 DCPS PCB

	Use		Display LED	Fuse
SGVA, PHOTO	Scan Gen., Photo Def	+15V/3A	LD1	F1, F10
		-15V/3A	LD2	F2, F11
DEF/LENS	Col	+25V/3.5A	LD3	F3
		-25V/3.5A	LD4	F4
SGVA, Opt VA	Video Amp	+15V/2A	LD5	F5, F12
		-15V/2A	LD6	F6, F13
DEF/LENS	Obj	+65V/5A	LD10	F17
PHOTO-1, -2	Photo bias, PMHV	+15V/1.5A	LD7	F7, F14
PMHV	Col electrode Bias	+18V/1A	LD8	F8
		-18V/1A	LD9	F9
MSEM200 FAN	Ethernet Fan	+12V/3A	LD17	F16, F25
IMP-N	Canceller	+15V/0.5A	LD18	F26, F28
		-15V/0.5A	LD19	F27, F29
DEF/LENS	Cond	+25V/2.8A	LD11	F18
DEF/LENS	Alignment	+15V/3.5A	LD12	F19, F23
		-15V/3.5A	LD13	F20, F24
DEF/LENS	Image shift	+30V/1.4A	LD14	F21
		-30V/1.4A	LD15	F22
SGVA, DEF/LENS	Interface	+5V/1A	LD16	F15
BLK	Blanking	+110V/0.2A	LD20	F30
BLK	Logic for BLK	+8V/0.5A	LD21	F31

5.4 Lens System

5.4.1 Functional Descriptions

Table 5-5

Controller Name	Maximum value	IO Bank	Address	Bit
Root HV reference	+10V	0	E20201, 03	12
1st COND	1.4A	0	E20205, 07	12
2nd COND Coarse	1.4A	0	E20261, 63	12
2nd COND Fine	15mA	0	E20265, 67	12
OBJ reference	+10V	0	E20271, 73	12
OBJ Coarse	5A	0	E20247, 49	16
OBJ Fine	50mA	0	E2021D, 1F	12
Image shift Lower-X	± 250mA	0	E20209, OB	12
Image shift Lower-Y			E2020D, OF	12
Image shift U/L ratio-X	± 150mA	0	E20235	8
Image shift U/L ratio-Y			E20237	8
Aperture Align-X	± 75mA		E20269	12
Aperture Align-Y			E2026B	12
Stigma-X	± 191mA	0	E20211, 13	12
Stigma-Y			E20215, 17	12
Beam Align-X	± 230mA	0	E20231	8
Beam Align-Y			E20233	8
Stigma Align-XX	± 50mA	0	E20251, 53	12
Stigma Align-XY			E20255, 57	12
Stigma Align-YX			E20259, 5B	12
Stigma Align-YY			E2025D, 5F	12
ExB1 reference	+10V	0	E20219, 1B	12
ExB1-B-X	340mA	0	E20239	8
ExB1-B-Y			E2023B	8
ExB1-Bias	+50V	1	E20201, 03	12
ExB3-B-X	± 218mA	1	E20211, 13	12
ExB3-B-Y			E20215, 17	12
ExB3-E-X	± 10V	1	E20219, 1B	12
ExB3-E-Y			E2021D, 1F	12
Dynamic Focus	180mA	0	E2022D	8
Def Upper offset-X	—	1	E20231	8
Def Upper offset-Y			E20233	8
Def Upper gain-X	0 – 100%	1	E20209, OB	12
Def Upper gain-Y			E2020D, OF	12

Controller Name	Maximum value	IO Bank	Address	Bit
Def round comp-X	—	1	E20221	8
Def round comp-Y			E20223	8
Def Lower offset-X	—	1	E20225	8
Def Lower offset-Y			E20227	8
VSE1 control	-200V	1	E2022D	8

5.4.2 Block Diagram

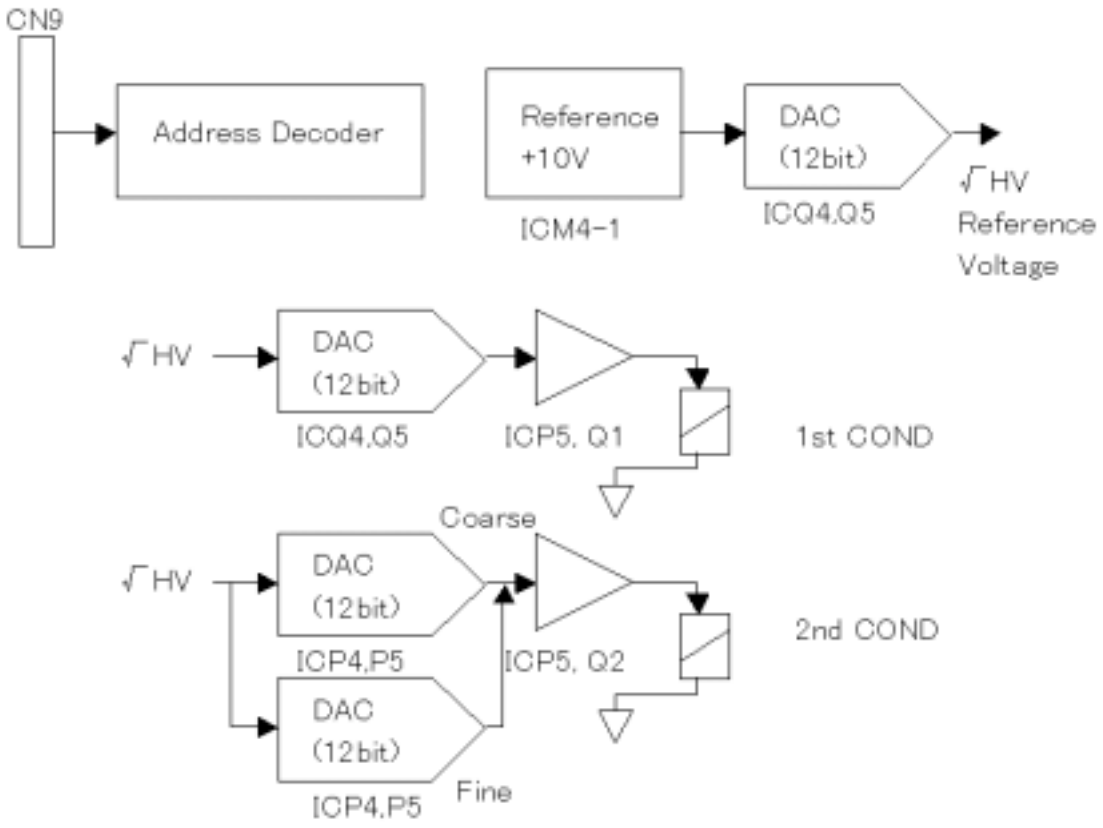

Figure 5-4

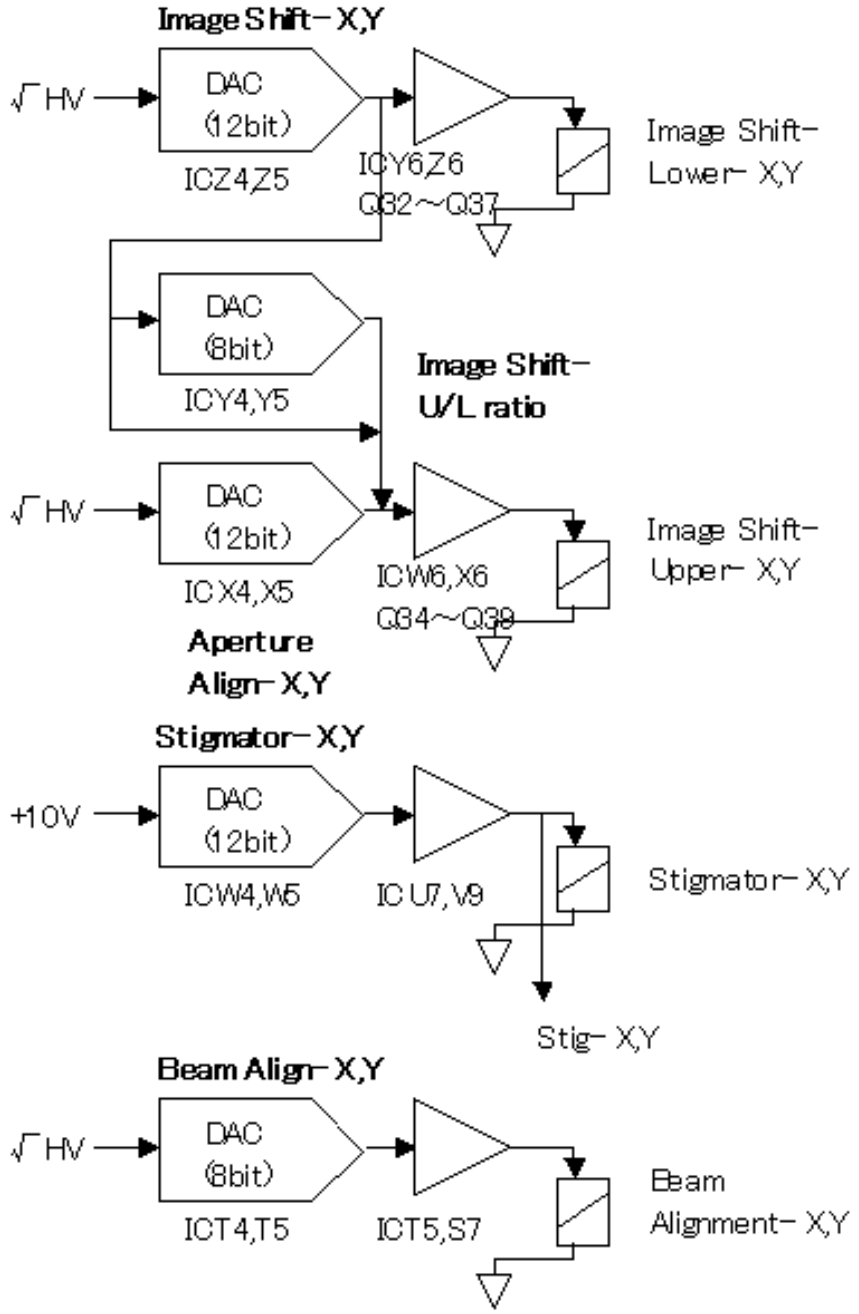
Image Shift-X,Y
√HV
DAC
(12bit)
ICZ4,Z5
ICY6,Z6
Q32~Q37
Image Shift-
Lower-X,Y
DAC
(8bit)
ICY4,Y5
Image Shift-
U/L ratio
√HV
DAC
(12bit)
IC X4,X5
ICW6,X6
Q34~Q39
Image Shift-
Upper-X,Y
Aperture
Align-X,Y
Stigmator-X,Y
+10V
DAC
(12bit)
ICW4,W5
IC U7,V9
Stigmator-X,Y
Stig-X,Y
Beam Align-X,Y
√HV
DAC
(8bit)
ICT4,T5
ICT5,S7
Beam
Alignment-X,Y

Figure 5-5

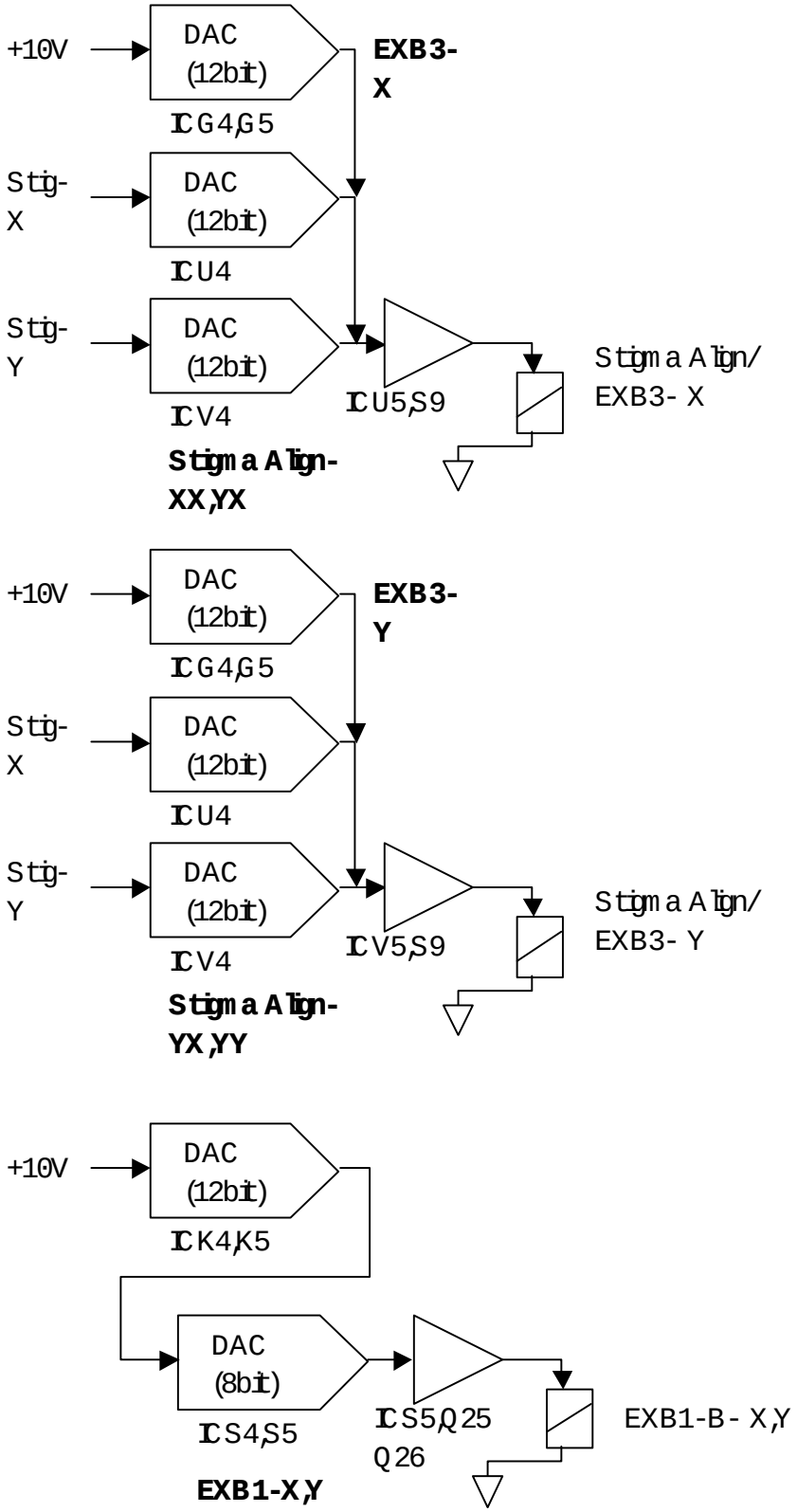
+10V
DAC
(12bit)
IC G4,G5
EXB3-
X
Stig-
X
DAC
(12bit)
IC U4
Stig-
Y
DAC
(12bit)
IC V4
IC U5,S9
Stigma Align-
XX,YX
Stigma Align/
EXB3- X
+10V
DAC
(12bit)
IC G4,G5
EXB3-
Y
Stig-
X
DAC
(12bit)
IC U4
Stig-
Y
DAC
(12bit)
IC V4
IC V5,S9
Stigma Align-
YX,YY
Stigma Align/
EXB3- Y
+10V
DAC
(12bit)
IC K4,K5
DAC
(8bit)
IC S4,S5
EXB1-X,Y
IC S5,Q25
Q26
EXB1-B- X,Y

Figure 5-6

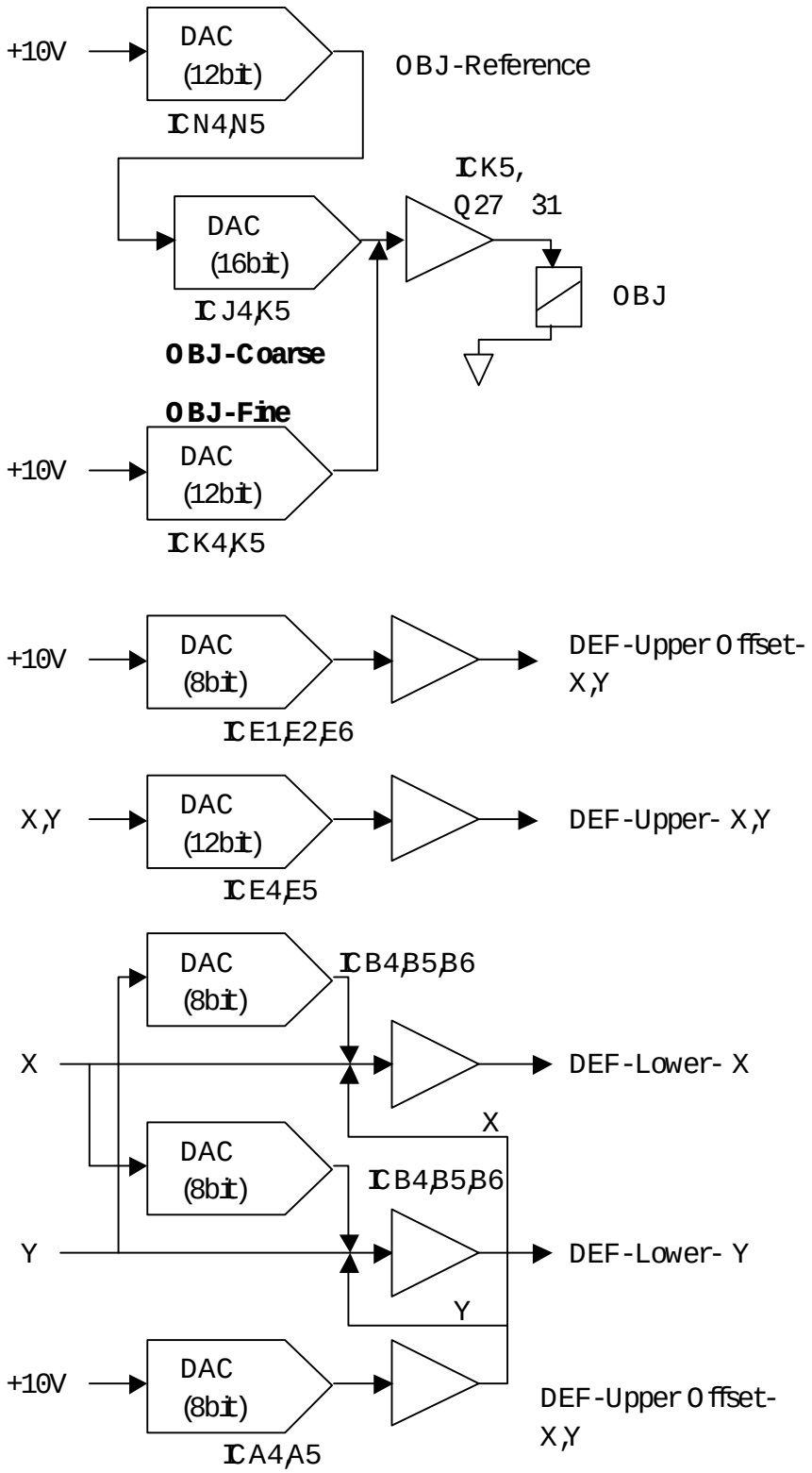
+10V
DAC
(12bit)
IC N4,N5
OBJ-Reference
IC K5,
Q27 31
DAC
(16bit)
IC J4,K5
OBJ
OBJ-Coarse
OBJ-Fine
+10V
DAC
(12bit)
IC K4,K5
+10V
DAC
(8bit)
IC E1,E2,E6
DEF-Upper Offset-
X,Y
X,Y
DAC
(12bit)
IC E4,E5
DEF-Upper- X,Y
DAC
(8bit)
IC B4,B5,B6
X
DEF-Lower- X
X
DAC
(8bit)
IC B4,B5,B6
Y
DEF-Lower- Y
Y
+10V
DAC
(8bit)
IC A4,A5
DEF-Upper Offset-
X,Y

Figure 5-7

5.5 ECPU247 and Image Memory System

5.5.1 ECPU247 Block Diagram

The ECPU247 Block Diagram is shown in **Figure 5-8**.

5.5.2 Image Memory Block Diagram

The Image Memory Block Diagram is shown in **Figure 5-9**.

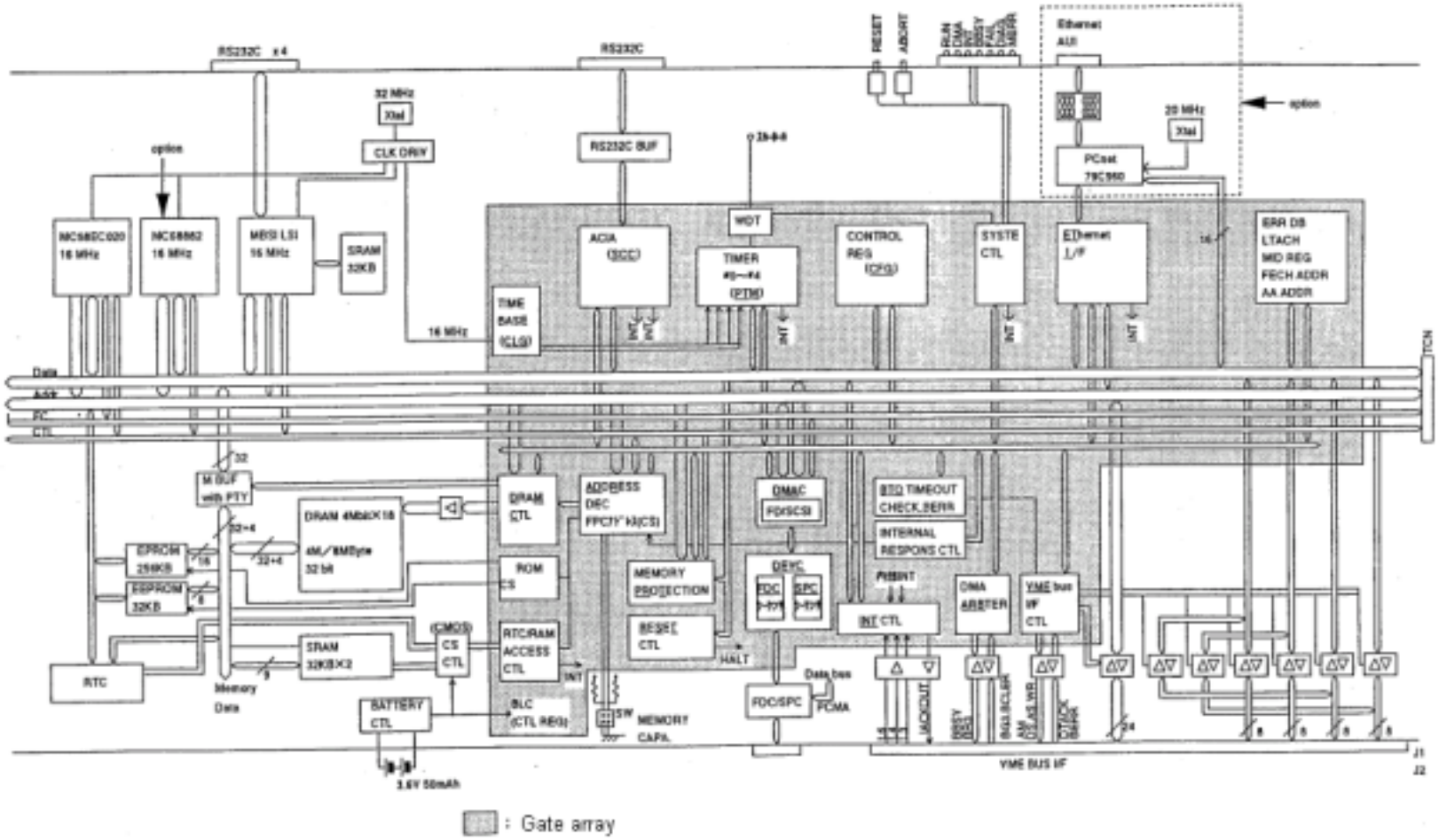

Figure 5-8: ECPU247 Block Diagram

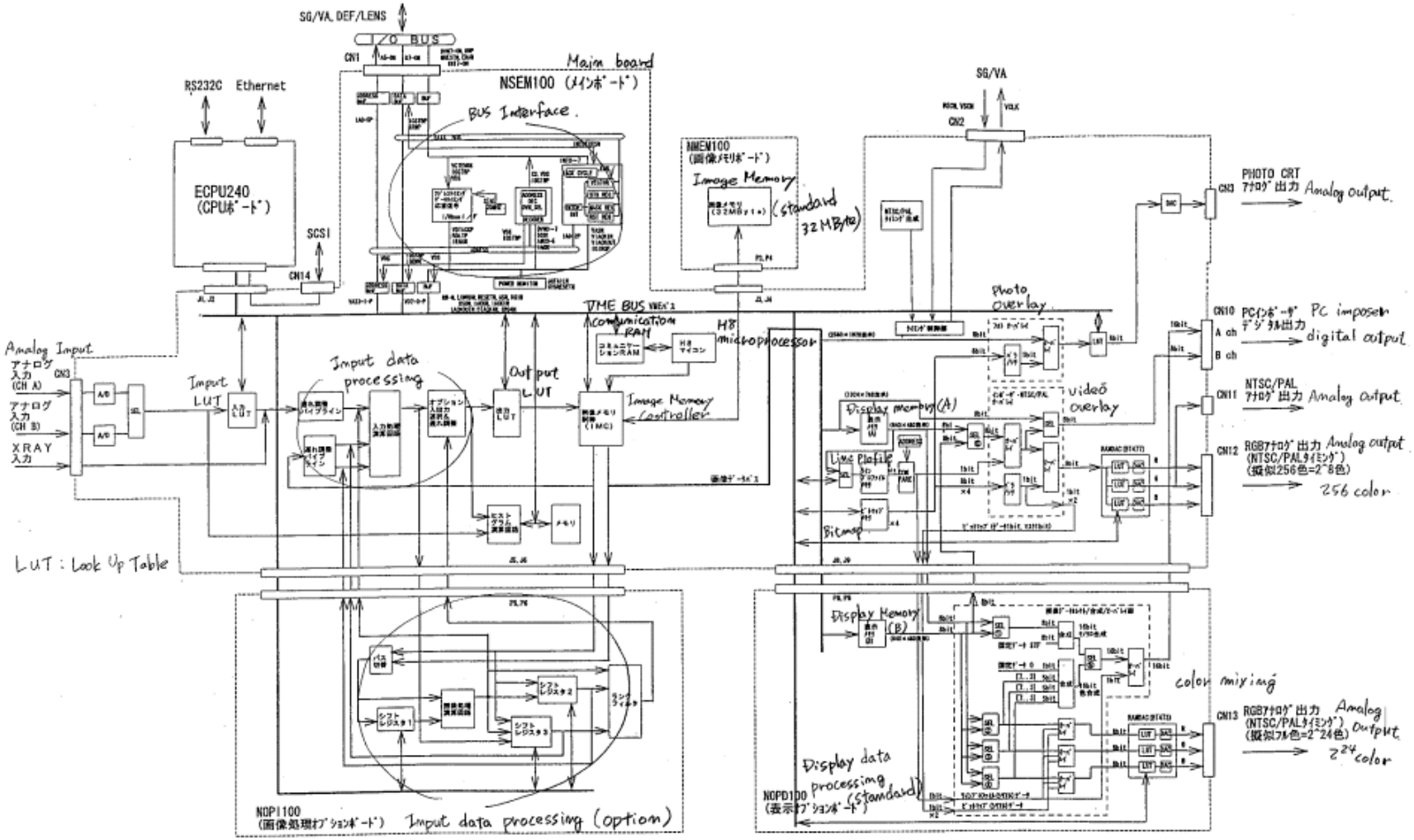

Figure 5-9: Image Memory Block Diagram

5.5.3 ECPU247 Board (CPU Board) LED

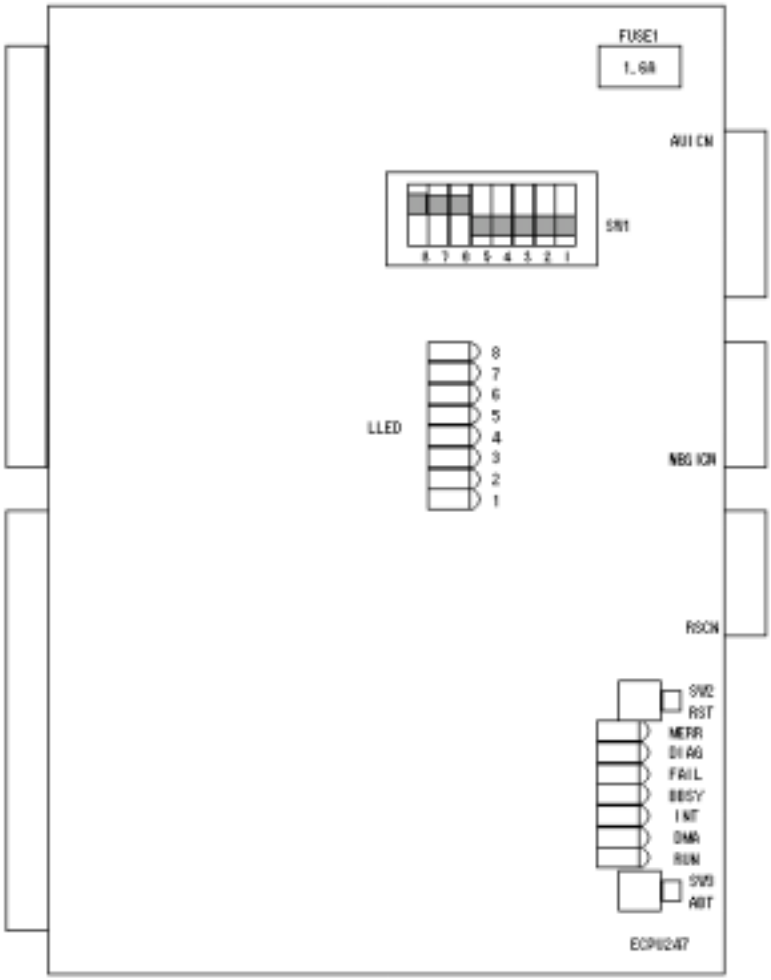

Figure 5-10: ECPU247 Board

LED

Table 5.6

Silk Screen	Color	Description	Normal Status
RUN	Green	CPU running	Lamp ON
DMA	Green	I/O got DMA bass right	Lamp ON at DMA
INT	Green	Interruption occurred	Lamp ON when interruption occurs

Silk Screen	Color	Description	Normal Status (after self-analysis)
LLED-1	Green	During self-analysis	Lamp OFF
LLED-2	Green	During self-analysis	Lamp OFF
LLED-3	Green	During self-analysis	Lamp OFF

Silk Screen	Color	Description	Normal Status
MBSY	Green	Memory bus busy	Lamp ON during Memory bus use
FAIL	Red	CPU halted	Lamp OFF
DIAG	Red	Lamp flashes: Self-analysis error Lamp ON: Boot error	Lamp OFF
MERR	Red	Parity error	Lamp OFF

Silk Screen	Color	Description	Normal Status (after self-analysis)
LLED-4	Green	During self-analysis	Lamp OFF
LLED-5	Green	During self-analysis	Lamp OFF
LLED-6	Green	During self-analysis	Lamp OFF
LLED-7	Green	During self-analysis	Lamp OFF
LLED-8	Green	During self-analysis	Lamp OFF

Self-analysis

After the reset starts, analyze the I/O function in the board. During self-analysis, [LLED] flashes and when the analysis result is normal, [DIAG] LED turns OFF. If the analysis result is not normal, [DIAG] LED flashes and the coded analysis result will be stored in a specific address ($0000F0) in the main memory.

Table 5.7

No.	Error Code	Description
1	$00	No error
2	$A0	MPU register check error
3	$A1	EPROM sun check error
4	$A3	Control register function error
5	$A4	DMAC register error
6	$A5	DMACC interruption check error
7	$A8	PTM register check error
8	$A9	PTM interruption check error
9	$AA	Memory protection function error
10	$AD	Main memory error
11	$B4	RTC register check error
12	$B6	EEPROM check error
13	$BB	FDC register check error
14	$BC	SPC register check error
15	$BD	MBSI check error

NOTE: Because the memory that stores self-analysis is backed-up with battery, if self-analysis error occurs, do not remove the battery and carry it without putting it in the conductive bag.

NSEM200/NMEM200/NOPD100 Board (Image Memory Board) LED

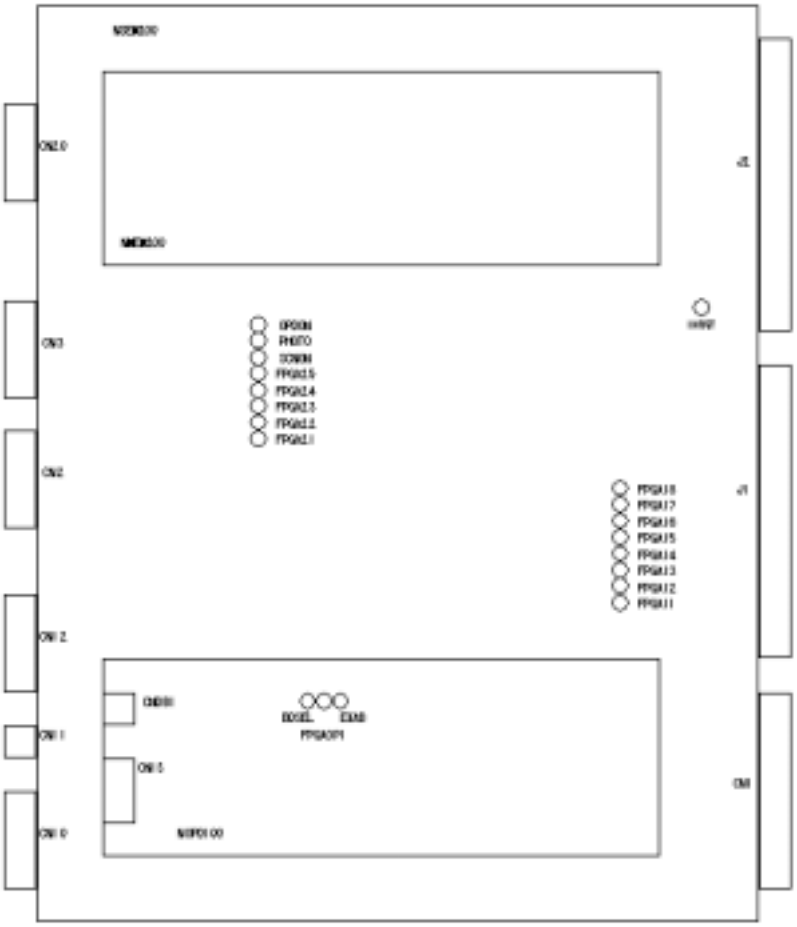

Figure 5-11

LED

NSEM200

Table 5.8

Silk Screen	Color	Description	Normal Status
FPGA11	Red	FPGA load error	Lamp OFF
FPGA12	Red	FPGA load error	Lamp OFF
FPGA13	Red	FPGA load error	Lamp OFF
FPGA14	Red	FPGA load error	Lamp OFF
FPGA15	Red	FPGA load error	Lamp OFF

Silk Screen	Color	Description	Normal Status (after self-analysis)
FPGA21	Red	FPGA load error	Lamp OFF
FPGA22	Red	FPGA load error	Lamp OFF
FPGA23	Red	FPGA load error	Lamp OFF
FPGA24	Red	FPGA load error	Lamp OFF
FPGA25	Red	FPGA load error	Lamp OFF

Silk Screen	Color	Description	Normal Status
FPGA16	Red	FPGA load error	Lamp OFF
FPGA17	Red	FPGA load error	Lamp OFF
FPGA18	Red	FPGA load error	Lamp OFF

Silk Screen	Color	Description	Normal Status (after self-analysis)
IHOST	Green	CPU load error	Lamp ON when activated
OPDO	Green	Display option	Lamp ON when loaded
PHOTO	Green	Photo output	Lamp ON at photo output
SCNON	Red	Scan timing signal input	Lamp ON at signal input

NOPD100

Table 5.9

Silk	Color	Description	Normal Status
BDSEL	Green	FPGA load error	Lamp OFF
EXAB	Green	Double image retrieval display	Lamp ON when displaying
EPGAOP1	Red	Option board memory selection	Lamp ON when selecting

5.6 Super Imposer and Canceller (IMP-N P.C.B)

5.6.1 Super Imposer

The function that a SEM image overlays on the GUI screen in the PC is called super imposer. The previous super imposer function used in the S-4700 was improved in the S-5200.

The Differences between Previous Imposer and New Imposer

Table 5.10

	Previous Imposer	New Imposer
GUI pixels	1024 x 768	1024 x 768
Color	256	Tool color (16,700,000)
Frame frequency	70Hz or less (Horizontal frequency: 56kHz)	75Hz or less (Horizontal frequency: 80kHz)

New Imposer Block Diagram

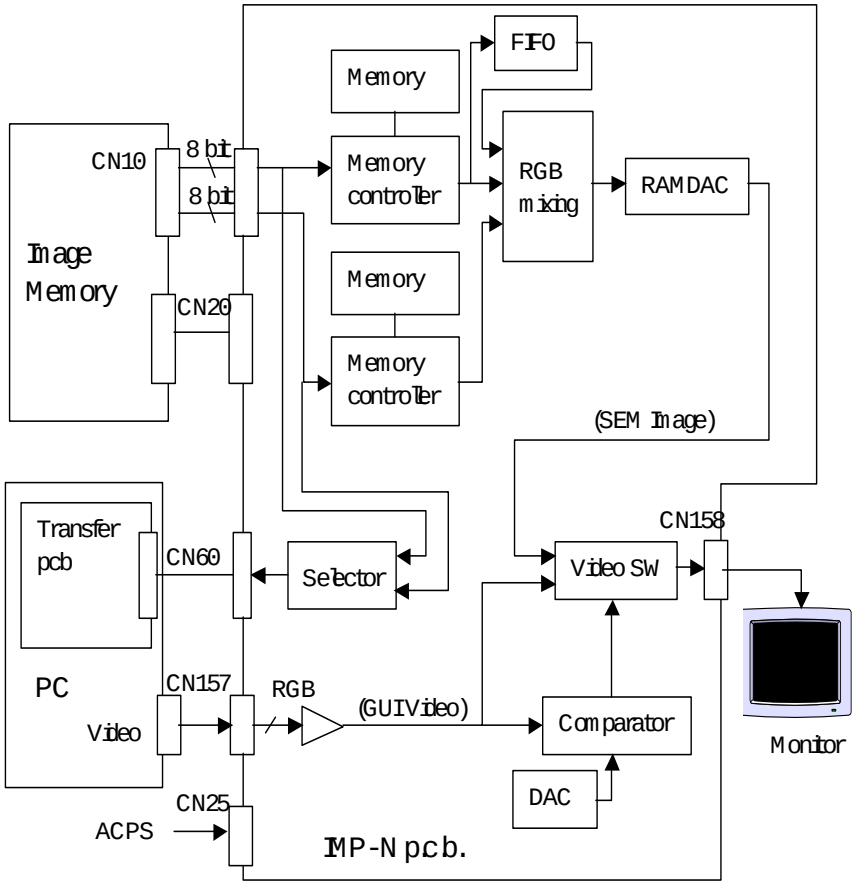

Figure 5-12: New Imposer Block Diagram

New Imposer's Main Structure

Table 5.11

Previous Imposer		New Imposer	
NSEM100 PCB imposer	271-4220	NSEM200 PCB imposer	271-5200
NMEM100 PCB imposer	271-3950	NMEM200 PCB imposer	271-5203
IMP PCB imposer	537-5800	IMP-N PCB imposer	537-5851
—	—	Transfer PCB imposer	537-5153
Video Card	537-7016	—	—
PC-SW PCB imposer	537-5139	—	—
CANCEL PCB imposer	537-5840	—	Be included in IMP-N
—	—	Others	—

Adjustments

Preliminaries

- Jumper pins
  Short: J7, Open: J3
- Variable resistor
  VR1: Turn it fully counterclockwise (IC N11-7, Output = approximately +2.7 V)
  Adjust the other VRs.
- Confirming PC settings
  Open [Properties] on the screen. Verify that the frequency is at 1024*768, 75 Hz.
  Make sure that the power management function is disabled.

Chroma Key Adjustment

1. Start the SEM using SYSTEM-SEM.
2. Turn the reference voltage-tuning knob, VR2, for the chroma key detection comparator in the screen display area to bring up a SEM image in the image display area. Turning the VR2 right and left causes a noise to appear. Set the VR to an intermediate value. If a SEM image does not appear, open the adjustment window for the Superimposer, and temporarily set the chroma key to R=80, G=10, B = 80 (**Figure 5-14**).
3. For chroma key settings, enter values that are higher or lower than the default value to produce a noise. When this happens, set appropriate intermediate values.

Adjusting the Display Area

1. Use the Data Manager to open a previously prepared 640x480 size BMP file, and transfer it back to the image memory. For adjustment purposes, the desirable BMP file is one in which the outermost frame has a box cursor. On the standard mode screen, set a PLL division ratio for the superimposer adjustment window so that the width of the frame for the area in which the SEM image is displayed will be the closest to the width of the frame for the area to be displayed by the superimposer. For ease of adjustment, use the Windows application Paint program to create a canvas size sufficiently larger than 640x480 and filled with R=128, G=0, B=128 colors. Display this canvas by superimposing it on the SEM Manager (**Figures 5-13, 5-14**).
2. In the next step, adjust the Horizontal Start Offset for the IMP Register on the superimposer adjustment window so that the left edge of the area frame in which the SEM image is to be displayed will match the left edge of the area to be displayed by the superimposer.
3. Adjust both H-start and V-start of the IP register so that the aforementioned box cursor is coincident with the SEM display area.

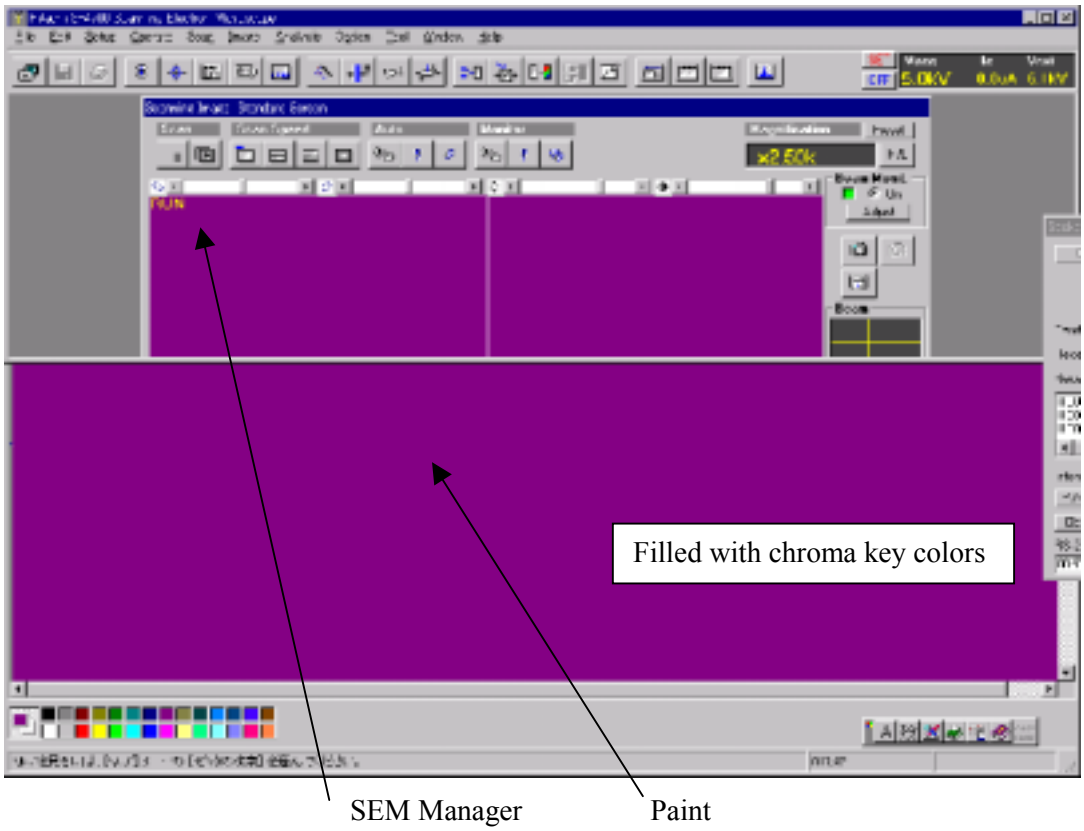

Figure 5-13: Chroma Key Adjustment

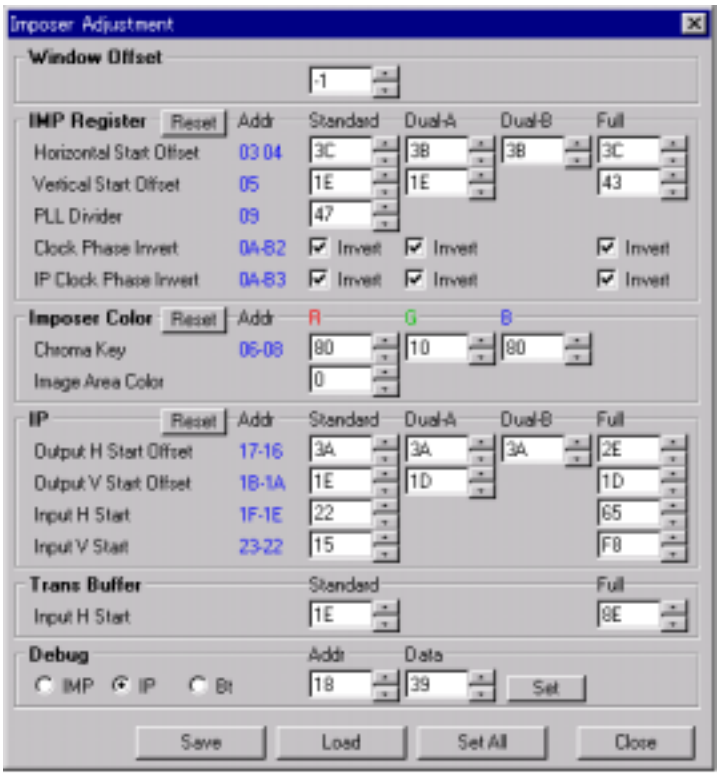

Figure 5-14: Imposer Adjustment Screen

4. If a noise is produced over the vertical edge of the display area when the PLL division ratio is changed, turn the *Clock Phase Invert* and *IP Clock Phase Invert* checkboxes on and off. Confirm the waveform. Fix the phase adjustment so that the fall edges of *V-synch* and *H-sync*, and the rise edge of *Clk* are not very close to each other. **Figure 5-15** shows the phase of the *H-synch* fall edge and that of the *Clk* fall edge. In (a), the *Clock Phase Invert* checkbox is turned on to increase the margin.

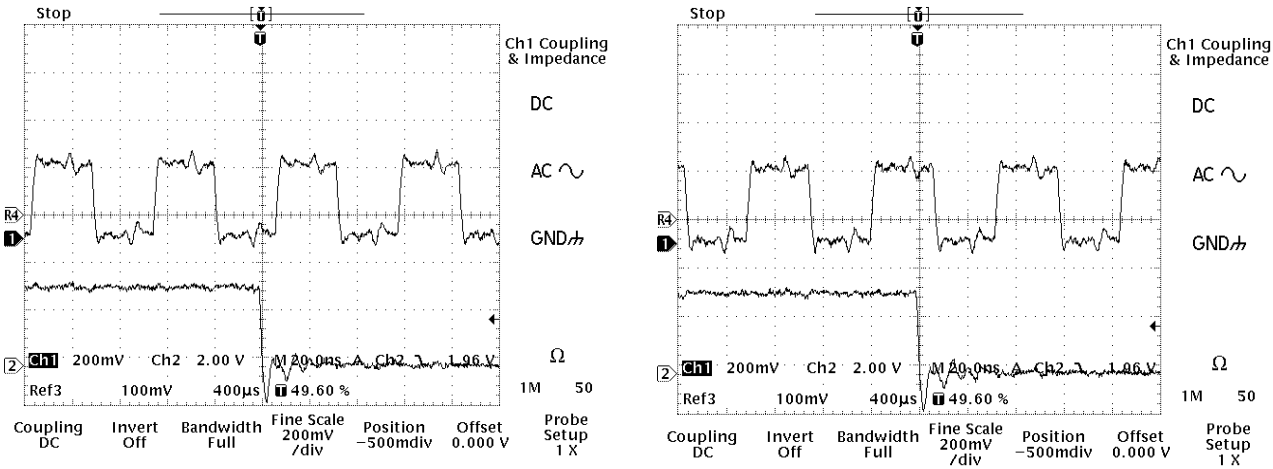

(a) Little phase margin (b) Adequate phase margin

Figure 5-15: Phase Adjustment between Sync Signals and Clocks

Table 5.12 shows the signals to be checked and the places where adjustments are to be made.

Table 5.12. Phase Adjustments

Signal to be Checked		Adjustment Location (Adjustment Window)	Remarks
Signal-1	**Signal-2**		
LD-CLK (TP2)	H-sync (TP1)	IP Clock phase	Both H and V must be satisfied.
	V-sync (TP15)		
Count-CLK (TP3)	H-sync (TP1)	Clock phase	Both H and V must be satisfied.
	V-sync (TP12)		

5. After adjusting the phases, re-adjust the offset values in the adjustment window so that the display area will match the display frame of the SEM.
6. Adjust the Window Offset value of the adjustment window between -2 and +2 so that the gap between the SEM display area and the area indicated by the imposer will be at minimum. Check the result by moving the screen from the left to the center and to the right.
7. Save the adjusted values.

Phase Adjustment of GUI Video Signals and Video Switch Signals

- As a quick method (coarse adjustment), use the SEM data entry function to enter white vertical lines and characters at any position on the image, and perform phase adjustments of the video and switch signals so that the characters will be white rather than violet.
- Following is a description of procedures for accurately making accurate adjustments on a waveform level. The following description is intended as a reference; these adjustments are normally not required because the system is shipped with these adjustments already made.

1. Launch Paint from the Windows Accessories and fill the background color with the aforementioned chroma key on the full screen.
2. Draw a white vertical, one pixel wide. (**Figure 5-16**)
3. Hide the entire toolbar.

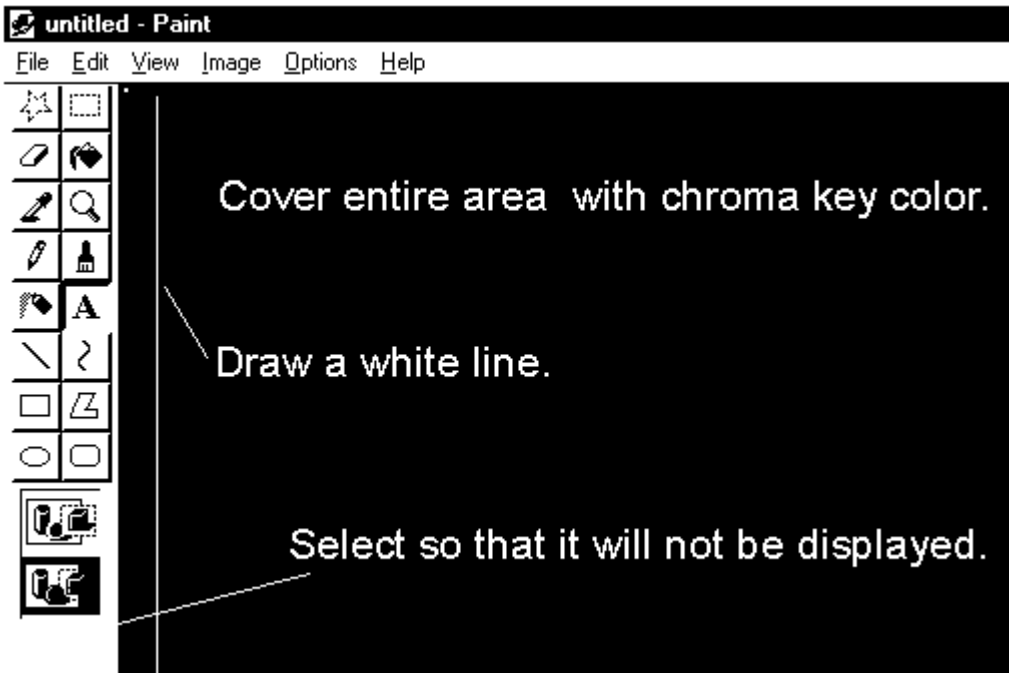

Figure 5-16: Phase adjustment between Sync Signals and Clocks

On the oscilloscope, observe the video signals represented by the vertical line. Apply synchronization at H-sync (TPI). Apply *Delay* to observe the signals represented by a white line. While monitoring the video switch signals on the oscilloscope, adjust the delay lines (DL7, DL8). **Figure 3** shows the monitoring of video signals by applying synchronization at H-sync. When GUI properties are 1024x768 and 75 Hz, the width of one pixel is approximately 10 ns, in which case make adjustments so that the output signal width will be close to the pixel width. An incomplete adjustment results in a white line tinged with violet. Use the SEM data entry function to enter characters and lines on the image to make sure that the white lines are not tinged. Also, confirm the same effect by increasing and decreasing the brightness of the SEM image.

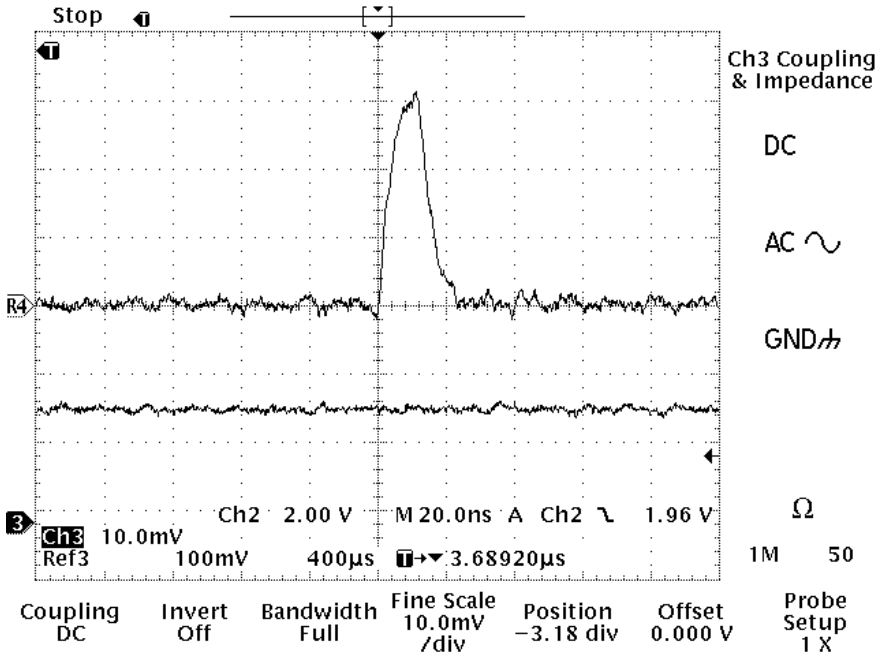

Figure 5-17 (a): Video Signal (ICG12-3)

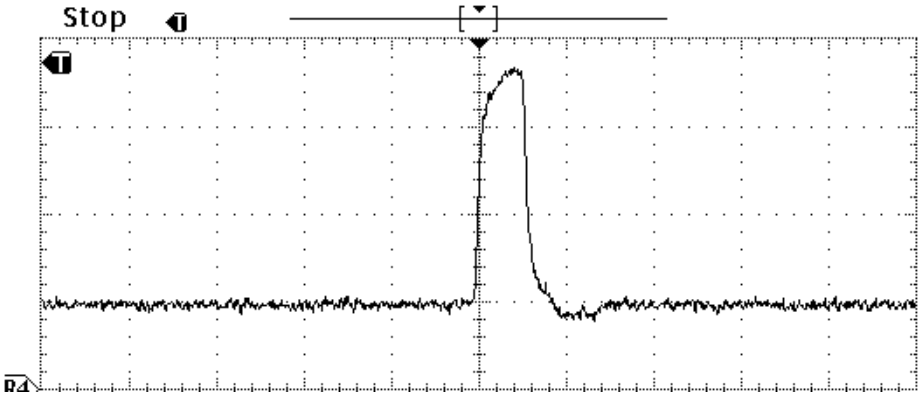

Figure 5-17 (b): Video Switch Signal (ICG12-16)

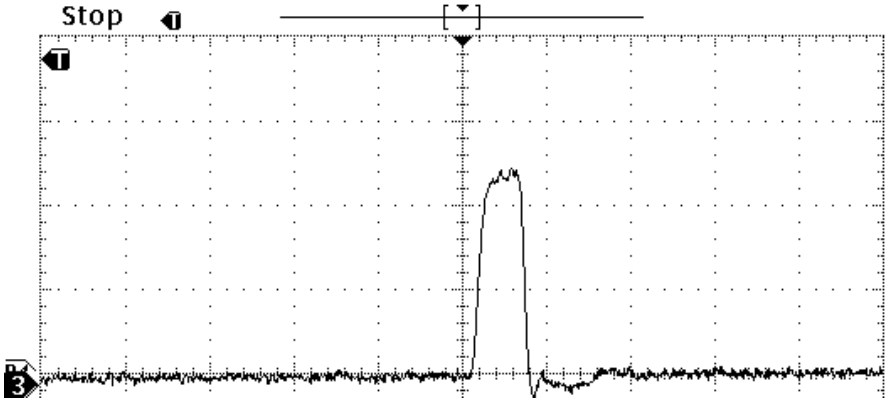

Figure 5-17 (c): Video Signal Output (ICG12-1)

Adjusting the Display Area in the Dual, Full Screen Mode

1. Use the Data Manager to open a 640-480 size BMP file with a 512x480 box cursor drawn at the center. Transfer this file back to the image memory.
2. Perform a *Dual* display position alignment on the adjustment window so that the size of the box cursor matches the frame for the SEM display area.
3. As in the case of the standard adjustment, if a noise is produced over the vertical edge of the display area, turn the Clock Phase Invert checkbox on the adjustment window on and off. Confirm the waveform. Fix the phase adjustment so that the fall edges of *V-sync* and *H-sync* and the rise edge of *Clk* are not close to each other (as in the case of the standard screen).
4. Confirmation operation 1

   If Dual-B in IMP-H-Start is small, a horizontal noise stripe is generated when any of the signals is unselected during the color synthesis process. Confirm that this condition does not occur.
5. Confirmation operation 2

   If the value of Dual-B in IP-Output-H-Start is incorrect, an image deviation occurs when the same image is color-synthesized. Confirm that this condition does not occur.
6. The correct vertical display position at Full (IP-Output V Start Offset) is when the lower edge of the GUI matches the lower edge of the image. However, because it is difficult to effect an accurate adjustment of the display position, in the coarse adjustment, use the same values as the Standard and Dual adjustments and perform the following procedures in a final adjustment:
   1) Freeze an appropriate SEM image at Full display. Use the data entry function to measure the size of the image.
   2) Save the image. If a regenerated size line agrees with the line before it was saved, the result is considered acceptable.

Capture an Image using a Trans-Buffer Size

1. Capture a screen in a 1280x960 size.
2. Save the results and re-display them using the Data Manager. Make *Input H-Start* adjustments on the adjustment window so that the joints at every 640 horizontal pixels match.

When changing the TV mode from NTSC to PAL, perform the following operations:

1. Change image memory jumpers. Replace XTAL (See PAL Modification Assembly.)
2. On TOOL-Imp-Adj of SEM Manager, change IP Input V start to 15 → 1B.
3. In TOOL-Option Setup of SEM Manager, change NTSC to PAL. Then, Close → Open the SEM Manager.

5.6.2 Magnet Field Canceller

Block Diagram

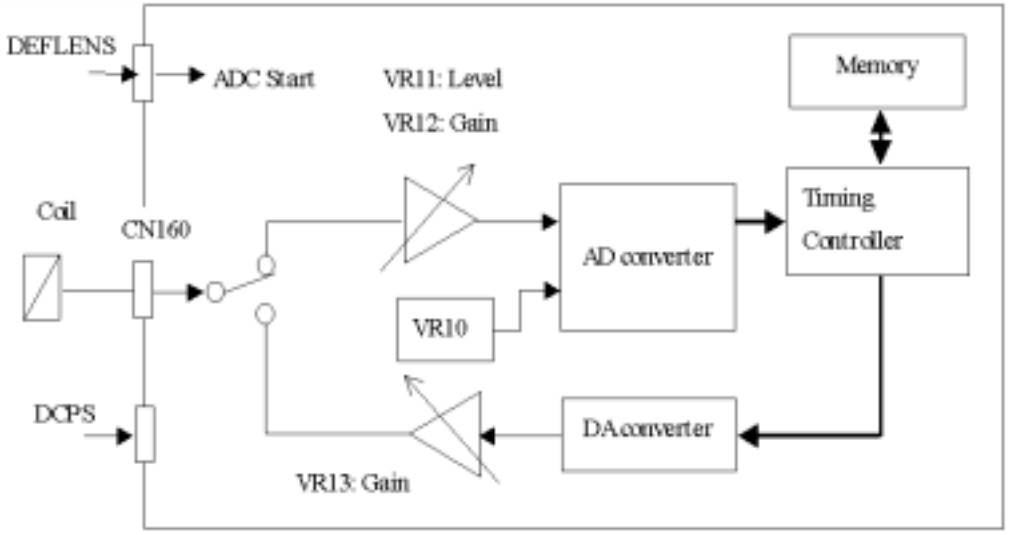

Figure 5-18: Magnet Field Canceller Block Diagram

Adjustment

1. When the pushbutton switch SW1 is depressed, check to see that the relay RY10 comes on and turns off in approximately 3 seconds.
2. Observe TP11 on the oscilloscope. Adjust VR11 and VR12 so that the waveform level remains between 0 and 4 V.

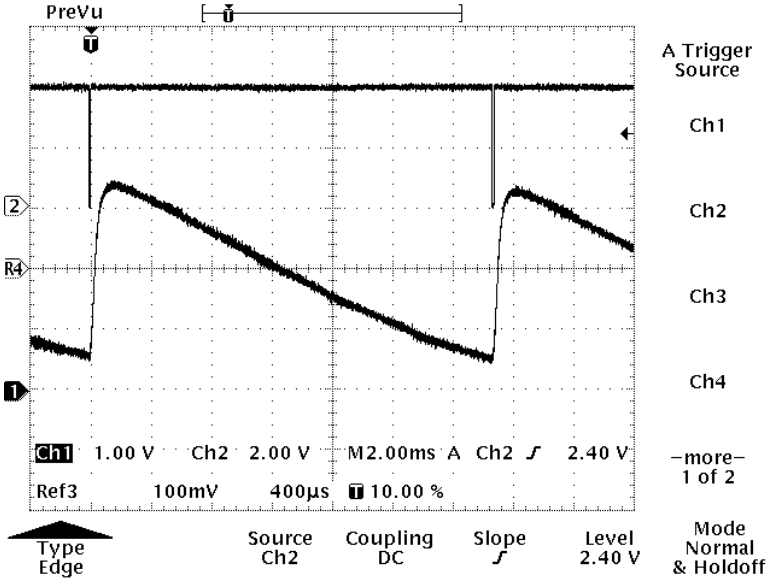

Figure 5-19: Input Waveform

3. Place a flux meter near the column. While monitoring TP12 on an oscilloscope, simultaneously observe the output waveform from the flux meter.

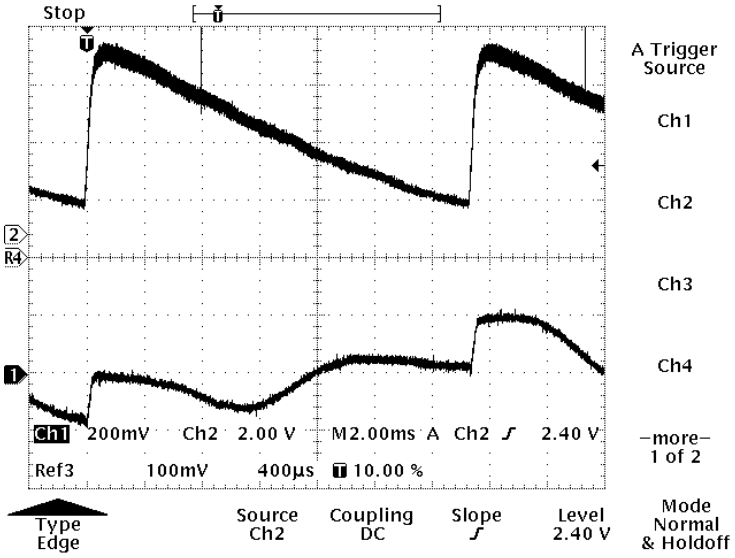

Figure 5-20: Observation Status

4. Adjust the VR13 so that the magnetic field waveform is at a minimum when V-sync on the monitor is at the beginning of another cycle.

5. Adjust the VR10 so that the phase of the waveform of the canceller magnetic field matches the waveform of the monitor magnetic field.

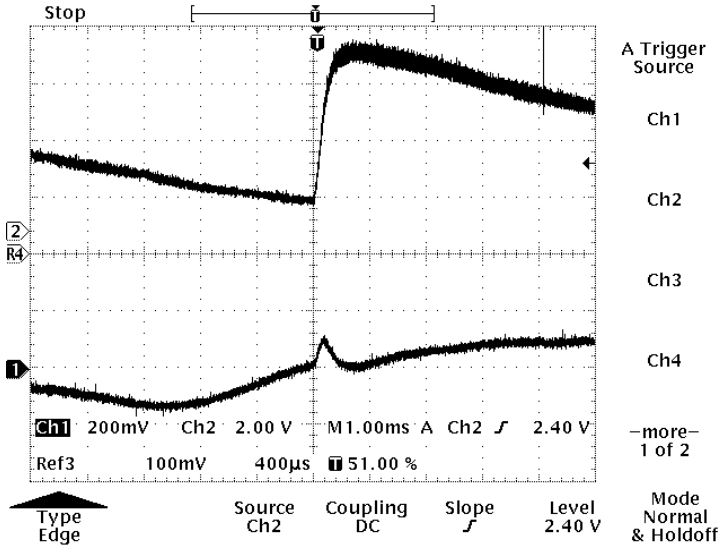

Figure 5-21: Inadequate Adjustment

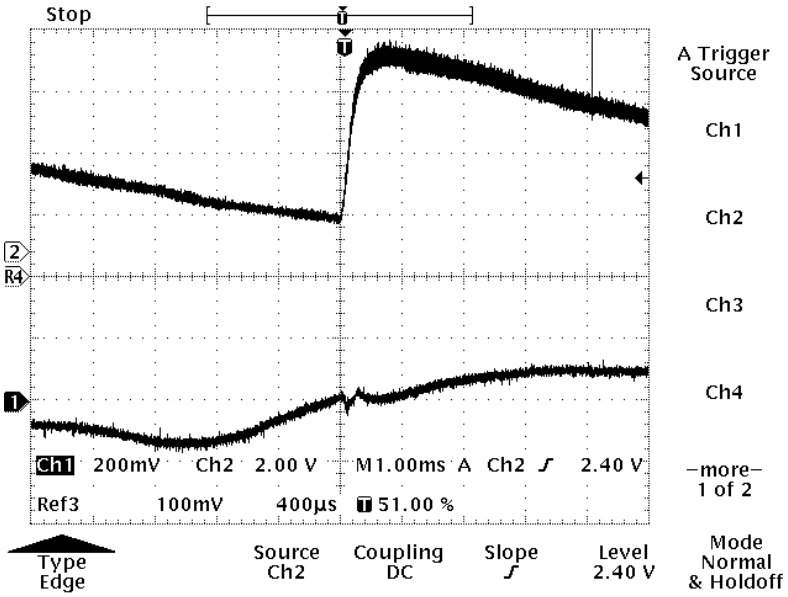

Figure 5-22: Complete Adjustment

5.7 Stage Controller

5.7.1 Stage Controller Configuration Diagram

A configuration diagram of the Stage Controller is shown in **Figure 5-23**.

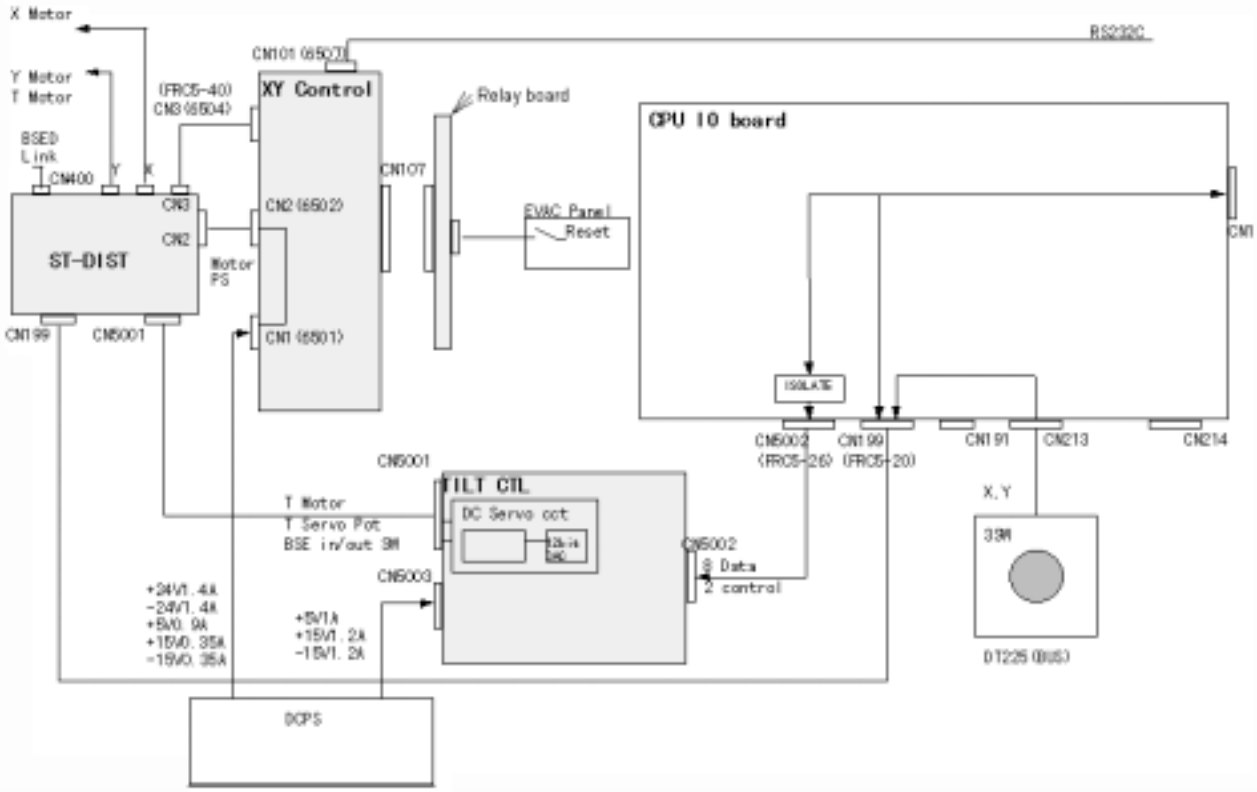

Figure 5-23: Stage Controller Configuration

5.7.2 Tilt Board

Determining the Angle

Do not start the VRT during this adjustment. Otherwise, the VRT will tilt more than necessary, resulting in damage to the potentiometer.

1. Adjust the VR2 so that the voltage of TP7 is 2.3 V (41.4º).
2. Adjust the VR1 so that the voltage of TP8 is -2.3 V (-41.4º).

Adjusting the Zero-degree Angle

1. Adjust the VR5 so that the voltage of TP9 is the same as TP6.
2. Adjust the VR3 and VR4 so that the voltage of TP11 is +5 V.

Confirming the Operation

1. Start the VRT (when the axis is tilted, the angle automatically returns to 0º).
2. Start the SEM. Open the stage control panel.
3. Move the angle of the axis to confirm that the voltage of TP9 behaves as indicated in the following table.

Table 5-13

No.	Angle	TP Voltage (V)
1	0	0
2	-5	-0.278
3	-10	-1.111
4	5	0.278
5	10	1.111

4. Set the axis to –40º or greater; confirm that the motor does not move more than 40º.
5. Set the axis to 40º or greater; confirm that the motor does not move more than 40º.
6. Set the angle of the axis to an appropriate value other than 0º; turn off both the SEM and VRT.
7. Restart the VRT; confirm that the axis moves to 0º.
8. Start the SEM; on the display, confirm that the angle is at 0º.
9. Turn off both the SEM and VRT again. Restart the VRT; confirm that the axis does not move.

5.7.3 X-Y Stage Controller (S-67A)

Adjusting the Origin (0,0) of the X-Y Stage

Adjust the origin of the X-Y stage after adjusting its eucentric position (axis slope adjustments). If the origin of the X-Y stage is adjusted before eucentric adjustments, the eucentric adjustment will require a re-adjustment of the X-Y origin. The origin is adjusted through the detection of X and Y photocoupler positions, which can be performed by aligning the position of the light-shielding plate for the photocoupler. The origin of the X-axis can be adjusted by aligning the light-shielding plate, and the origin of the Y-axis can be adjusted by aligning the photocoupler.

Adjusting the origin of the X-axis

1. Press the Reset button on the Stage controller panel to return it to the origin. The X,Y coordinates will be displayed as:

   X: 0000 µm
   Y: 0000 µm

2. On the monitor, display an image in the Low Mag Mode.
3. Push and pull the middle axis in the fine-tuning nut so that the shade of the specimen will behave as shown in the following figure when the X-axis is moved between +1000 µm and - 1000 µm. This completes the adjustment of the way the X-axis swings.

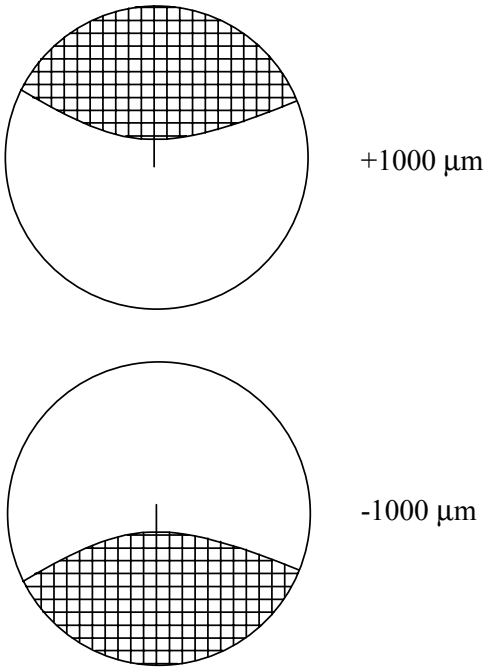

Figure 5-24: Image on the TV Monitor during X-axis Adjustments

Adjusting the Origin of the Y-axis

1. Press the Reset button on the Stage controller panel to return it to the origin. Confirm that the light-shielding plate stops at 000 µm after the origin of the photocoupler is adjusted and confirmed.
2. Move the Y-axis to either +1000 µm or –1000 µm by moving the Y-axis control field.
3. As in the case of the X-axis, move the viewing field in the Low Mag Mode. Confirm the splitting in the + and – directions when the Y-axis is moved, as illustrated in the figure. Micro-adjust the view field range by operating the photocoupler origin adjustment screw shown in the figure.
4. After the origin adjustment, depress the Reset button again to return the Y-axis to the 000 µm position. Re-check the splitting of the view field, and confirm the splitting after the adjustment of the photocoupler position.
5. Until the splitting adjustment is complete, repeatedly adjust the photocoupler and depress the Reset button.

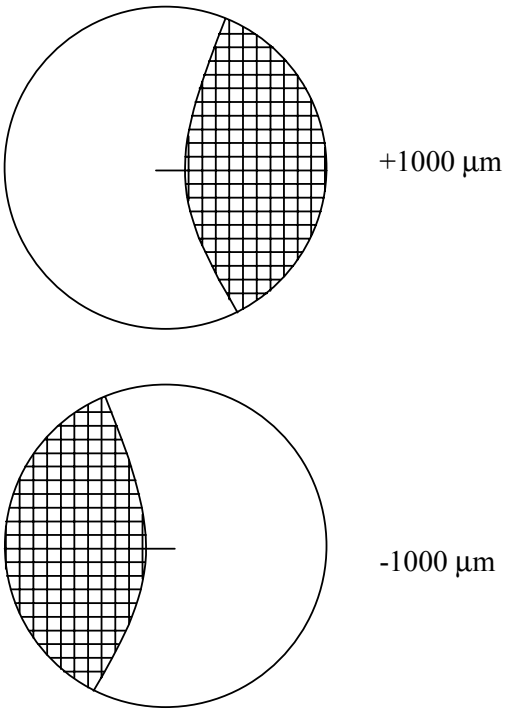

Figure 5-25: Image on the TV Monitor during Y-axis Adjustment

X-Y Stage Controller

The VRs for the adjustment of the X-Y Stage controller are adjusted at the time the system is shipped from the factory. Therefore, these VRs should not be rotated by unauthorized personnel. If you need to adjust any of the VRs, please contact factory personnel.

Error Display

Errors are displayed on an axis-by-axis basis.

X		E	–	2

E-2 indicates an error in the amp unit.

Error on the X-axis: X-axis display unit

Error on the Y-axis: Y-axis display unit

If an error occurs only on one of the two axes, the axis that does not have an error displays the current value “as is”.

<Restoring the Origin>

When started or reset, the system X-Y Stage controller returns to the origin as follows:

1. The X- and Y-axes simultaneously begin to move to the origin.
2. The origin is detected from one direction, as illustrated in **Figure 5-26**.
3. After the move to the origin is complete, the X-Y Stage controller transmits its status.
4. The maximum moving speed is 200 kpps.

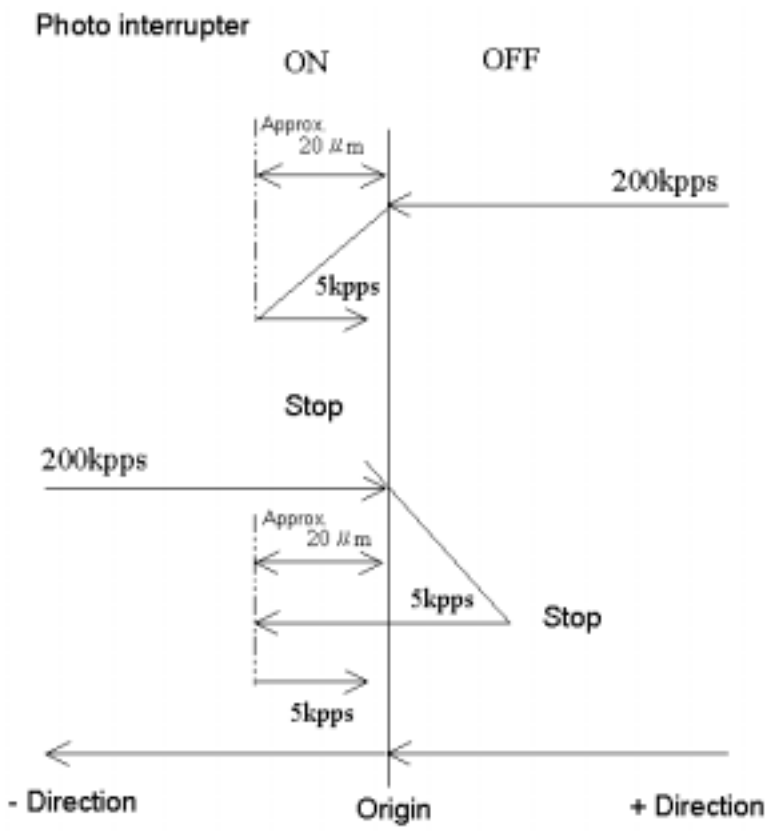

Figure 5-26

Protection Function

Amplifier Error Detection Function

Table 5.14

	Detected Parameter	Detected Problem	Post-detection Action
Power outage	Drop in supply voltage	• Power input less than 14 V	• Servo off • Indicator lamp (LD-4204) is lit; indictor panel E-2 is lit.
Over-speed	Excessive output voltage (armature voltage)	• Motor fault and motor connection error (wire, bad polarity, poor conduction) • Encoder connection error (line breakage, A/B phases connected in reverse, poor conduction) • Encoder not connected **NOTE: For an XY stage controller, the maximum output voltage is DC 23V relative to an input voltage of DC24V. Therefore, the XY stage controller is set to a non-operating value.**	

	Detected Parameter	Detected Problem	Post-detection Action
Overload	Excessive output current (armature current)	• Motor overload **NOTE: The detected parameter is subject to an inverse time limit characteristics such that** **tf(I)=CONSTANT, as illustrated in Figure 5-27.** 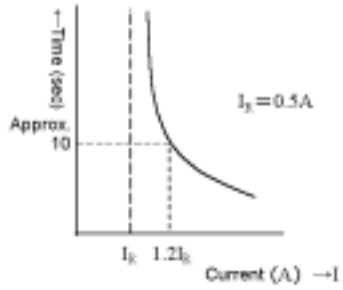 **Figure 5-27**	• Servo off • Indicator lamp (LD-2303) is lit; indictor panel E-2 is lit.
Over-heating	Excessive rise in output-stage power transistor temperature	• Controller overload (used continuously under an allowable output current anomaly) • Abnormal rise in ambient temperature • Abnormal rise in temperature due to poor radiation • Overheating due to a power transistor failure	• Servo off • Indicator lamp (LD-2303) is lit; indictor panel E-2 is lit.
Over-current	Excessive output current	• Shorting between motor output pins • Motor coils	• Servo off • Indicator lamp (LD-2202) is lit; indictor panel E-2 is lit.
Overflow	Excessive reserve pulse in the deviation counter (±6144 pulses)	• Abnormal F/V voltage adjustment • Abnormal motor response (motor locked, falling torque) • Control board error	• Servo off • Indicator panel E-2 is lit.

Amplifier Indicator Lamps

The amplifier is equipped with the LED indicator lamp to indicate the operational condition.

Table 5-15:

Symbol	Color	Display
LD-8	Green	Power ON
LD-1201	Green	Controller enabled (servo ON)
LD-4204	Red	Stop-on-power failure function running
LD-2202	Red	Stop-on-over-speed function running
LD-3203	Red	Stop on overload/overheat/overcurrent function running
LD-5205	Green	In-position state

Adjusting the Controller

Amplifier Unit Adjustment Volume and Check Pins

Table 5.16

	Symbol	Adjustment
Volume	F/V	F/V signal voltage adjustment
	FV-0	F/V signal voltage offset adjustment
	OFF	Offset adjustment
	VR6, 206	D/A conversion voltage offset adjustment
	L-G	Position loop gain adjustment
	M-G	Speed loop gain adjustment
	C-L	Current-limit settings
	VR5, 205	Over-speed settings
	(X-axis) (Y-axis)	
Check pins	F/V	Velocity feedback (F/V) signal
	CUR	Motor output current
	SPD	D/A conversion voltage signal
	COM	Signal circuit COM

The signals in the 200s represent the Y-axis. Other than the numbers, the X- and Y-axes indicate the same values with different locations. See the layout diagram for the various locations.

Amplifier Adjustment
Although the various volumes are adjusted before the system is shipped, power fluctuations may require offset adjustments. Such adjustments should be performed according to the following procedures:

Offset Adjustment

1. Turn on the power to move the motor to the origin. In this step, confirm that the motor has stopped even though the position adjustment for the actuator may not be complete (display panel: 000).
2. Align the FV-O pot (for both the X- and Y-axes) approximately to the center.

Figure 5-28: FV-0 Pot

3. Rotate the VR6 (X-axis) and the VR206 (Y-axis) so that the in-position LED (see the layout diagram) lights up.
4. In the condition up to step 3, rotate the FV-O pot to confirm the range in which the in-position LED lights up. Align the FV-O pot approximately to the middle of this range.

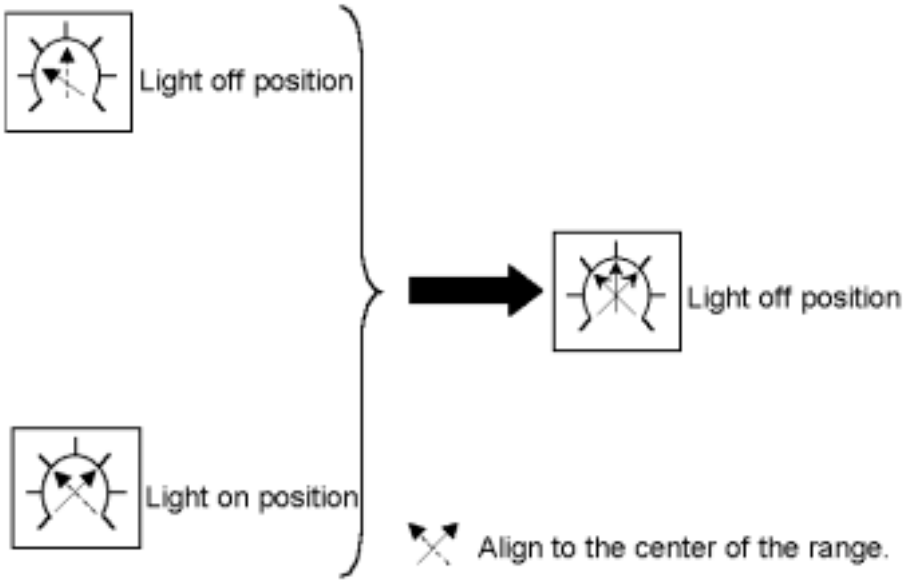

Figure 5-29

Gain Adjustment (already adjusted)

Connect an oscilloscope (preferably a memory scope) between the pulse check pins “F/V” and “COM”.
Input the command pulses at the maximum desired speed. Observe the motor response signals (F/V voltage).

1. The type of motor waveform as illustrated in the figure indicates an appropriate gain setting (the rule of thumb is a level just before an overshoot or undershoot condition occurs).
2. If the motor response waveform is not at an appropriate level, adjust the L-G pot. The rotation of the CW increases the gain and the propensity to generate on overshooting.

   ★ The adjustment of the L-G pot changes the Kp value (position loop gain). Reducing the L-G pot too much can reduce position alignment precision, which should be avoided.

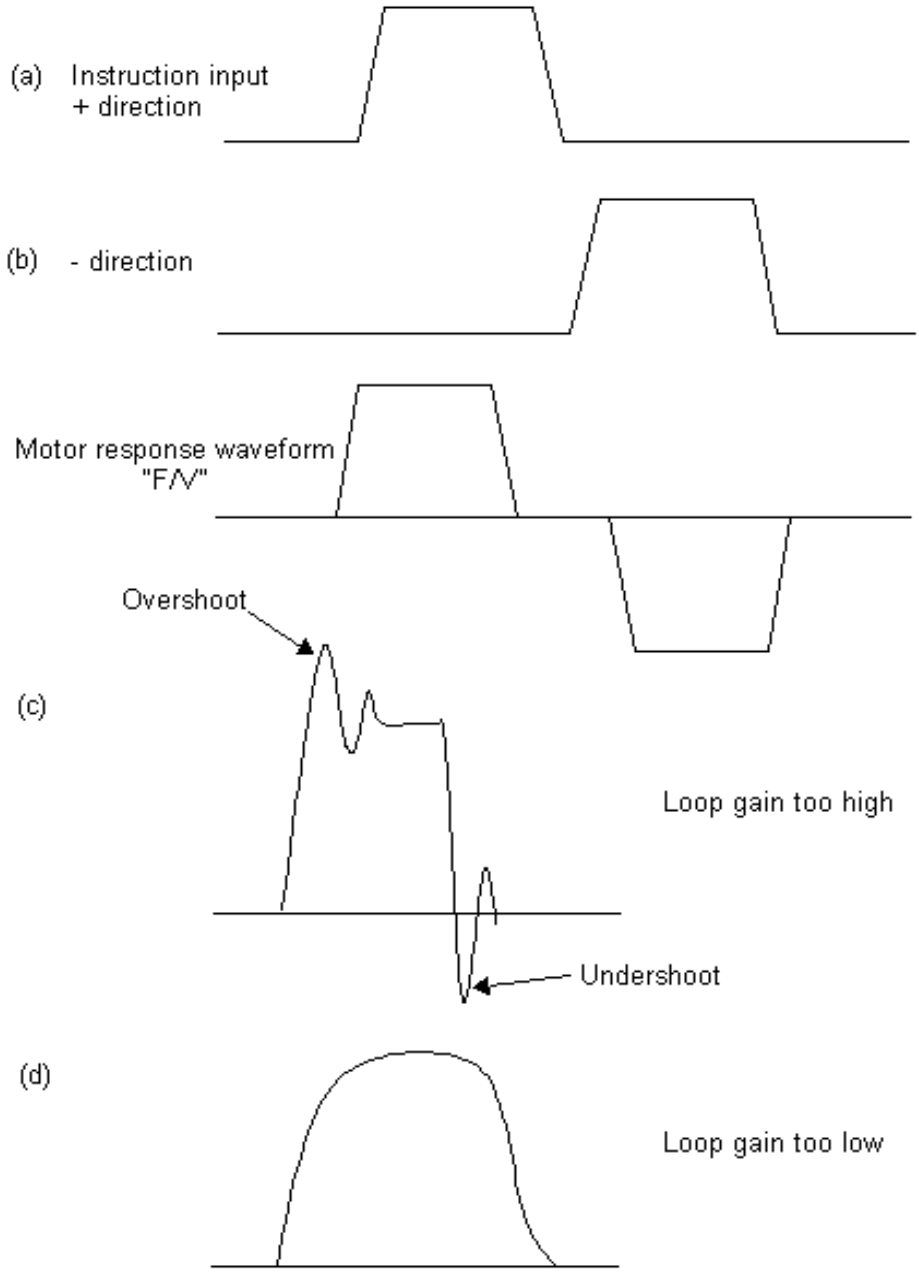

Figure 5-30: Motor Response Waveform

3. If an appropriate waveform cannot be obtained by adjusting the L-G gain, adjust the M-G pot. The rotation of the CW increases the gain.

   ★ Adjusting the M-G pot changes the speed loop gain. Rotate the M-G pot clockwise to increase the gain as much as possible without causing the motor response signal (F/V voltage) to oscillate.

F/V Voltage Adjustment (already adjusted)

The F/V voltage can be verified by measuring the voltage of the “F/V” check pin. Standard F/V voltage values are listed below. If there is a significant difference between the measured value and the standard value, use the F/V pot to make appropriate adjustments. The rotation of the CW increases the voltage.

F/V standard settings	Approximately 3V/200 kpps

★ Because F/V voltage waveforms contain superimposed ripple components, when taking measurements using an oscilloscope, please be sure to read average values.

Output Current Limit Adjustment (already adjusted)

The output current can be monitored using the voltage of a “CUR” check pin. A 5A/1A relationship holds between the "CUR" pin voltage and the output current. The current limit value can be adjusted by operating the C-L pot. The current limit value can be checked by applying a sudden acceleration to the motor and by setting the peak value of the resulting start-up current.

Over-speed Adjustment

If the output voltage grows excessively, an abnormal condition is detected. A detection level can be set by means of the VR5 (X-axis) and the VR205 (Y-axis). Because the maximum output voltage is approximately DC 23V relative to an input voltage of DC 24V, the XY Stage controller is set to a non-operating value.
If the XY Stage controller runs, turn the volume in the direction of CW.

Controller Adjustment Volume

Symbol	Adjustment
VR104	TILT angle gain adjustment
VR103	TILT angle offset adjustment
VR107	X-axis command speed adjustment
VR110	X-axis command speed offset adjustment
VR108	Y-axis command speed adjustment
VR109	Y-axis command speed offset adjustment

TILT Angle Adjustments

Adjust the TILT angle display. Use the offset adjustment volume to adjust the 0º display. Use the gain adjustment volume to adjust the maximum angle display.

Command Speed Adjustments (already adjusted)

This step performs an adjustment of the maximum speed and offset for the X- and Y-axes. Because this adjustment is made at the time the system is shipped, the volumes that are provided should not be touched.

NOTE: Perform offset adjustments after the TILT angle gain change width is adjusted.

DIP Switch Settings

RS-232C

Specifications

Start-stop synchronization
Data bits: 7/8 bits
Parity: even/odd/none
Stop bits: 1/1.5/2 bits
Baud rate: 1200/4800/9600

Switches

- Data bit switch

	SW103-1
7 bits	OFF
8 bits	ON (default)

- Parity on/off switching

ON:	ON
OFF:	OFF (default)

Figure 5-31:

- Parity even/odd switching

	SW103-3
Even:	ON (default)
Odd:	OFF

- Stop-bit switching

	SW103-4	SW103-5
1 bit	ON	OFF (default)
1.5 bits	OFF	ON
2 bits	ON	ON

- Baud rate switching

	SW106-6	SW103-7
12000 baud rate:	ON	OFF
48000 baud rate:	OFF	ON (default)
96000 baud rate:	ON	ON

W Command Default Values

W command default value:	SW101-1	SW101-2
1:	OFF	OFF
10:	ON	OFF (default)
100:	OFF	OFF
1000:	ON	ON

r Data Output (yes/no)

	SW101-4
Output, yes:	OFF
Output, no:	ON (default)

NOTE: SW101-3 should remain OFF.

Alarm Lamp Specification

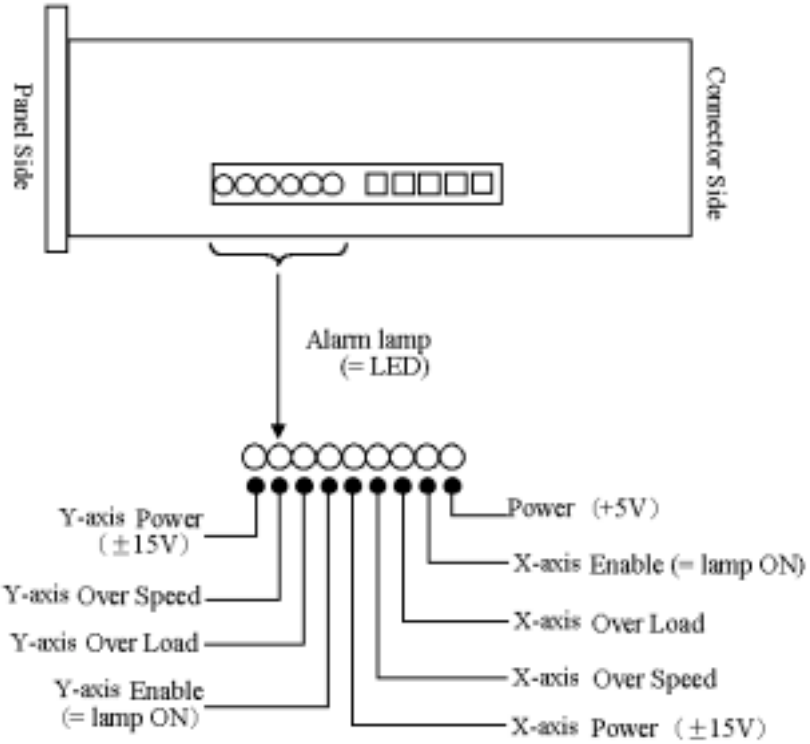

Figure 5-32

RS-232C I/F Board Setting

J1, J2 Settings

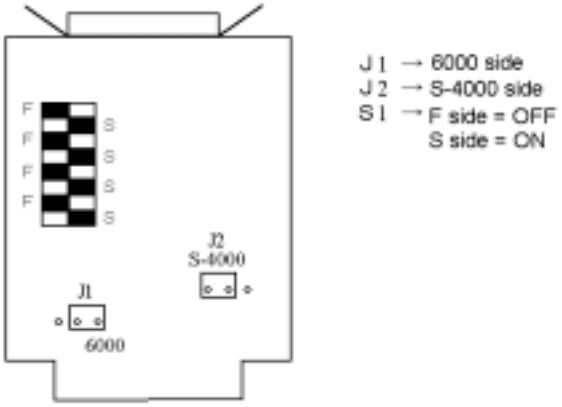

Figure 5-33:

Put the RS-232C board into the slot shown below and connect the cable to CN6507 on the hyper stage controller unit.

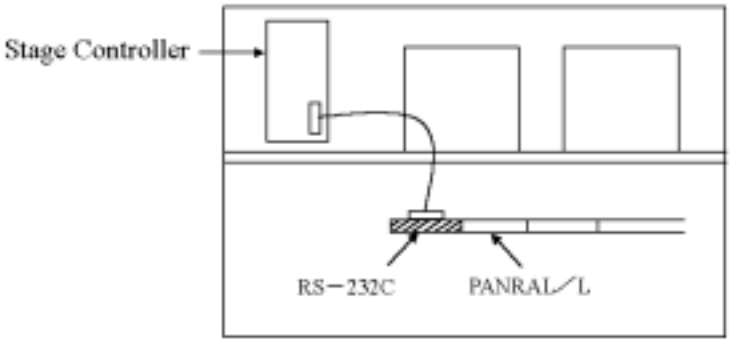

Figure 5-34: Backside of the Display

PARAL I/F Board Settings

S1 & S2 Settings

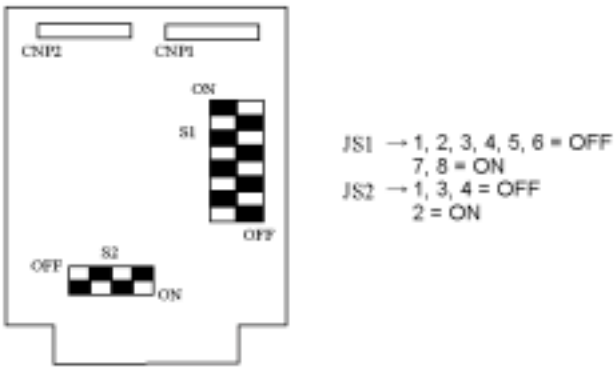

Figure 5-35

5.7.4 Stage Adjustment

Problem

When the power or the Reset SW is turned on, sometimes an ERROR-2 error occurs during low-speed operation, which can cause a system malfunction (in some cases, by turning the power or the Reset SW on again, the system may return to normal).

Cause

- The input command voltage for the V/F (voltage/frequency) conversion circuit IC in the stage controller sags during low-speed operation due to a temperature drift, which causes an impaired pulse transmission condition.
- In the controller board circuits, the V/F converter is output only when the operating speed command output becomes a positive voltage at point A in the OPAMP at the lowest speed. However, a temperature increase or other changes in the ambient conditions around the controller cause a negative voltage, which hinders low-speed motions, thus generating an ERROR-2 error.

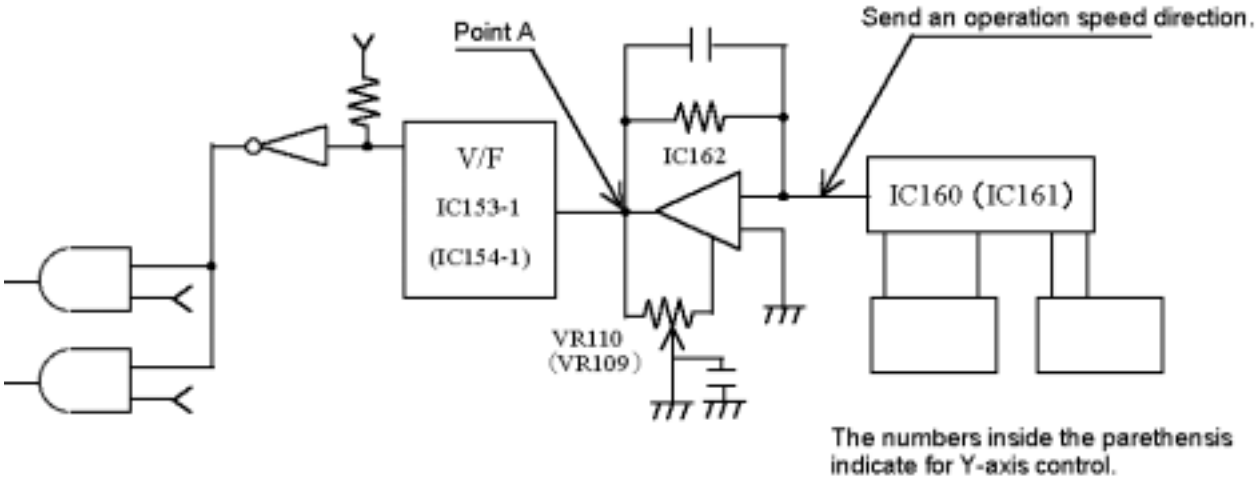

Figure 5-36

Adjustment Procedures

1. Do not make these adjustments immediately before or after the power is turned on. Instead, they should be performed at least 30 minutes after the power is turned on.
2. Connect a frequency monitor (e.g., a synchroscope) to the X- and Y-axes.
   X-axis: IC153-1 – GND (IC153-2)
   Y-axis: IC154-1 – GND (IC154-2)
3. Turn the offset adjustment VR in the direction shown in the figure.
   X-axis: VR110
   Y-axis: VR109
4. After the power is turned on, restore the power (depress the Reset SW).
5. After the stage returns to the origin and the motor stops, use the offset VR to adjust the VR110 and VR109 so that the V/F output will be 50 Hz (50 pulses).

5.8 High Voltage Unit

5.8.1 Block Diagram

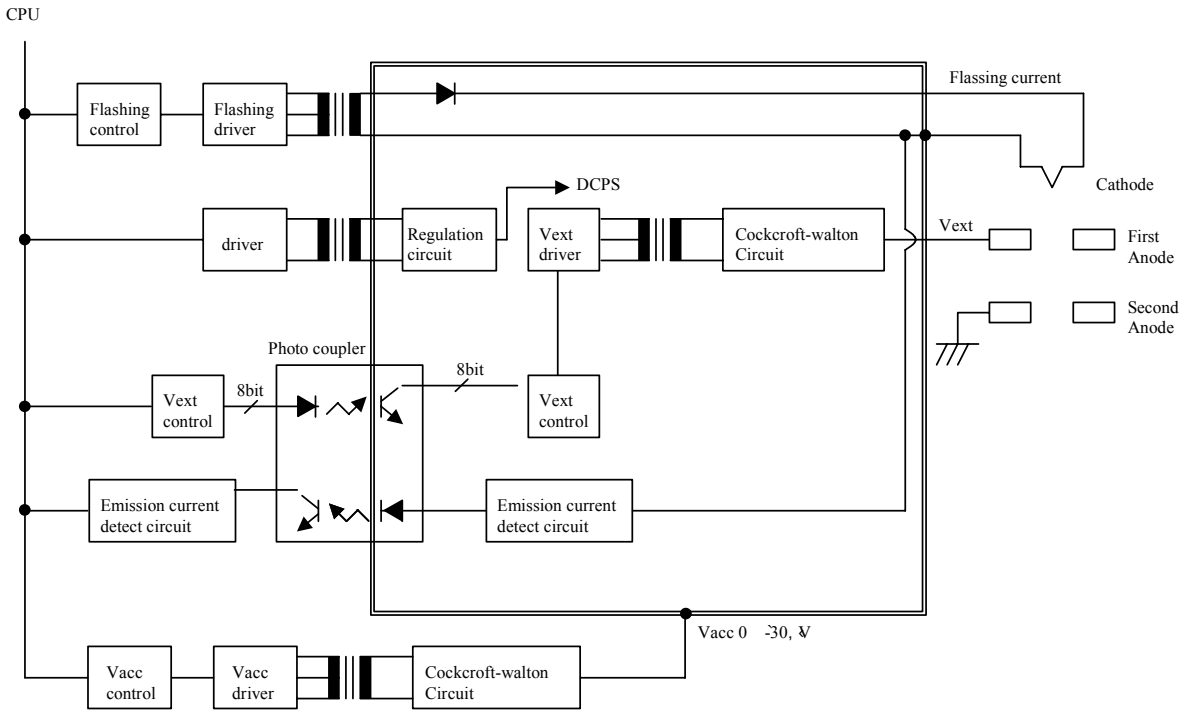

Figure 5-37

5.8.2 I/O Address

Table 5.17

Control	Address	W/R	Bit	Signal
EMISSION	E200F0	R	8	$D_{[7..0]}$: Emission Read (0.5 µA/LSB)
STATUS	E200F4	R	8	D0: High Vacuum D1: HV-OFF (HV Hardware reset) D2: Overheat (Head-sink) D3: Overheat (Lens) D4: MLV (Manual Valve) Close D5: (Reserve) D6: (Reserve) D7: (Reserve)
V1	E200F8	W	8	$D_{[7..0]}$: V1 set (25.49 V/LSB)
$V0_{[7..0]}$	E200FA	W	8	$D_{[7..0]}$: $V0_{[7..0]}$ set (7.326 V/LSB)
$V0_{[11..8]}$, Control	E200FC	W	8	$D_{[3..0]}$: $V0_{[11..8]}$ set $D_{[6..4]}$: Flashing Intensity (1 – 3) D_7: (reserve)

Control	Address	W/R	Bit	Signal
HV Control	E200FE	W	8	D_7: V0 ON D_6: V1 ON D_5: Flashing ON $D_{[4..0]}$: EM Limit set (4 µA/LSB)

5.8.3 Adjustment

Reference Voltage

Check point: TP7 (HVC P.C.B.)
Output voltage: +10V ± 0.3V

Oscillation Frequency

Check point: TP15, 16 (HVC P.C.B.)

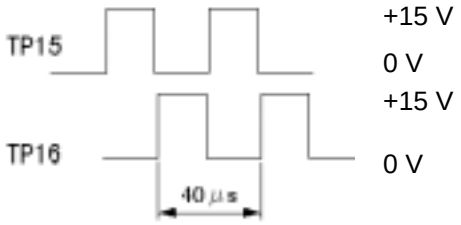

Flashing Time

Check point: TP1 (HVC P.C.B.)
Adjustment: VR6

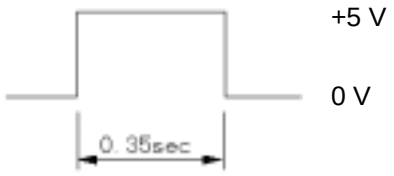

Flashing Intensity

Table 5.18. Flashing Intensity

Intensity	Adjustment	Indication (µA)
1	VR1	0
2	VR2	30 - 40
3	VR3	40 - 50

Emission Current

Check point: TP10 (HVC P.C.B.)

Accelerating Voltage Control

Check point: TP5 (HVC P.C.B.)

Output voltage: -10V/30kV

Check point: TP17 (HVC P.C.B.)

Output voltage: +10V/30kV

Extracting Voltage Control

Check point: TP6 (HVC P.C.B.)

Output voltage: 32V

DC Power Supply on HVC P.C.B.

Table 5.19

Output	Check Point	LED	Fuse
+5V	TP11	LD1	FUSE 1
+15V	TP12	LD2	FUSE 2
-15V	TP13	LD3	FUSE 3
+36V	TP14	LD4	FUSE 4

5.9 EVAC Sequence

5.9.1 EVAC Configuration

Standard Evacuation Configuration

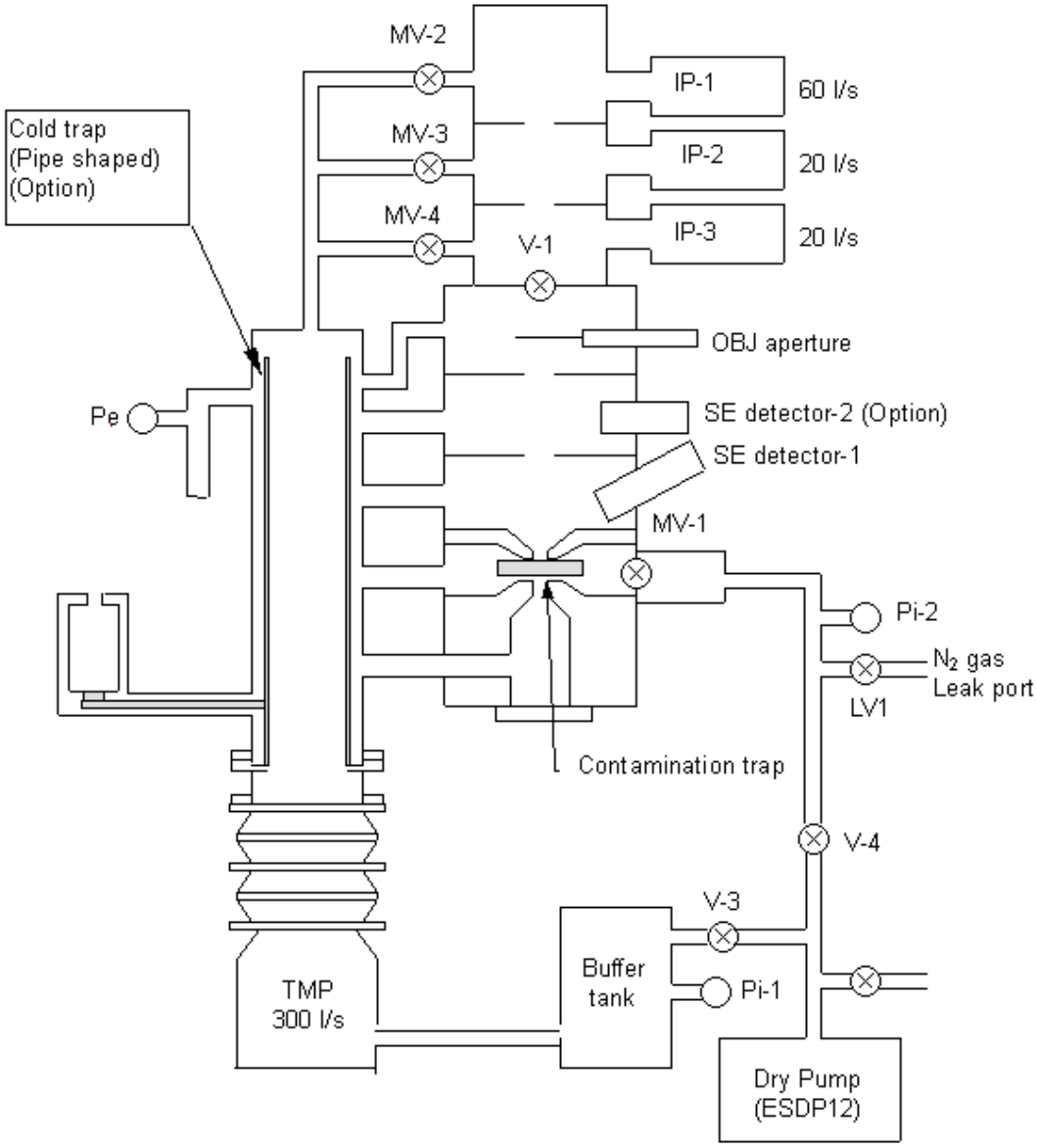

Figure 5-38: Evacuation System Standard Configuration (Option)

Tandem Evacuation Configuration

Objective: To increase the attainable vacuum by reducing the back pressure for TMP (300 L/s)

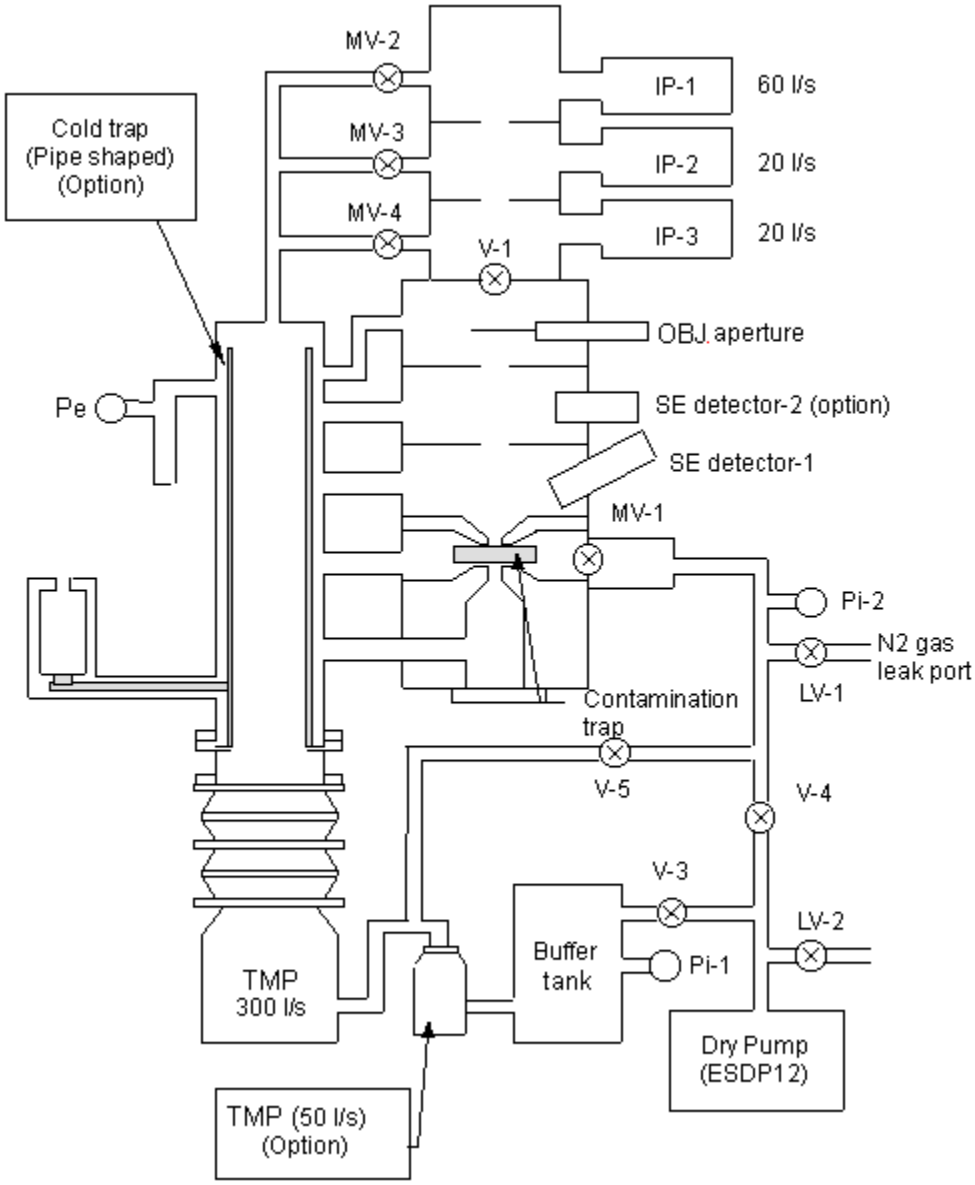

Figure 5-39: Evacuation System Tandem Configuration (Option)

5.9.2 EVACSEQ Board Configuration

The EVACSEQ Board Circuit Diagram is shown in **Figure 5-40**.

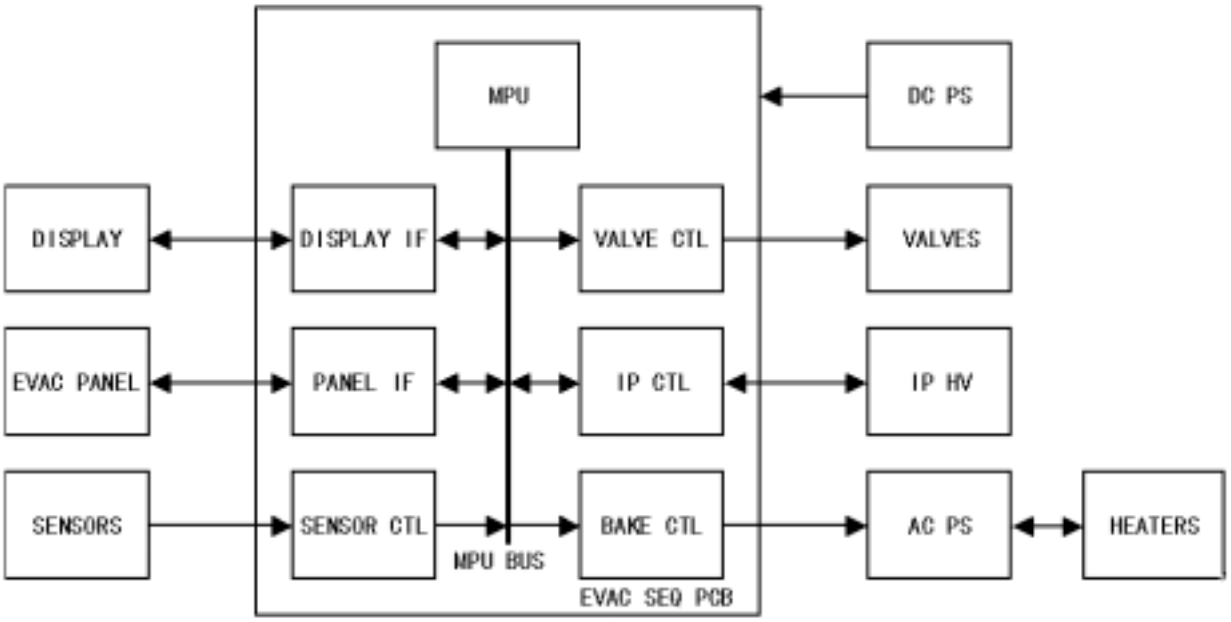

Figure 5-40: EVACSEQ Board Circuit Diagram

5.9.3 Adjusting the EVACSEQ Board

Adjusting Pi1 (specimen chamber)

1. Set the specimen chamber to the normal atmospheric pressure.
2. Adjust the volume VR5 so that the voltage of TP12 will be 5.1±0.1 [V].
3. Set the vacuum level display option to S.C-Pi. Confirm that the display indicates a value of $9x10^4$.

Adjusting Pi2

1. Set the specimen exchange chamber to the normal atmospheric pressure.
2. Adjust the volume VR6 so that the voltage of TP13 will be 5.1±0.1 [V].
3. Set the vacuum level display option to S.E.C-Pi. Confirm that the display indicates a value of $9x10^4$.

Adjusting Pe

1. Adjust the volume VR4 to a mid-point.

Adjusting IP1

1. Check to see that the IP switch is OFF.
2. Adjust the volume VR3 so that the voltage of TP7 will be 0±0.1 [V].

3. Adjust the volume VR1 so that the voltage of TP6 will be 0±0.1 [V].
4. Set the vacuum level display option to IP1. Confirm that the display indicates –x10[Pa].
5. Turn on the switch for IP1.
6. Confirm that the LED for IP1 is on.
7. Confirm that the vacuum level indicator shows a normal value ($2x10^{-8}$ – $2x10^{-6}$ [Pa]).

Adjusting IP2

1. Check to see that the IP2 switch is OFF.
2. Adjust the volume VR2 so that the voltage of TP9 will be 0±0.1 [V].
3. Adjust the volume VR1 so that the voltage of TP6 will be 0±0.1 [V].
4. Set the vacuum level display option to IP2. Confirm that the display indicates –x10[Pa].
5. Turn on the switch for IP2.
6. Confirm that the LED for IP2 is on.
7. Confirm that the vacuum level indicator shows a normal value ($2x10^{-8}$ – $9x10^{-6}$ [Pa]).

Adjusting IP3

1. Check to see that the IP3 switch is OFF.
2. Adjust the volume VR202 so that the voltage of TP201 will be 0±0.1 [V].
3. Adjust the volume VR200 so that the voltage of TP10 will be 0±0.1 [V].
4. Set the vacuum level display option to IP3. Confirm that the display indicates –x10[Pa].
5. Turn on the switch for IP3.
6. Confirm that the LED for IP3 is on.
7. Confirm that the vacuum level indicator shows a normal value ($2x10^{-8}$ – $9x10^{-6}$ [Pa]).

5.9.4 Flowchart

Standard Configuration Flowchart

Starting Operation (Standard Piping)

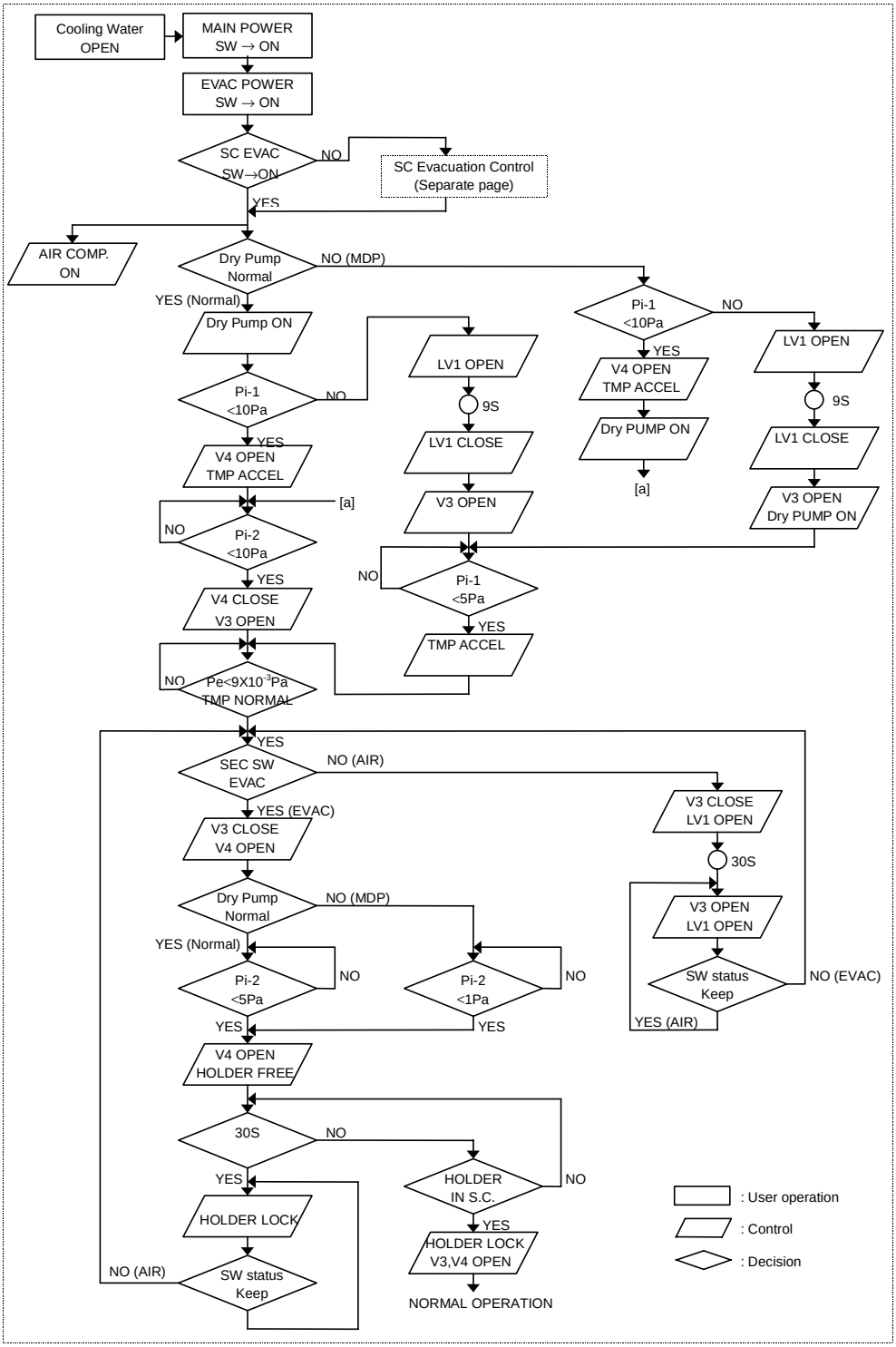

Normal Operation

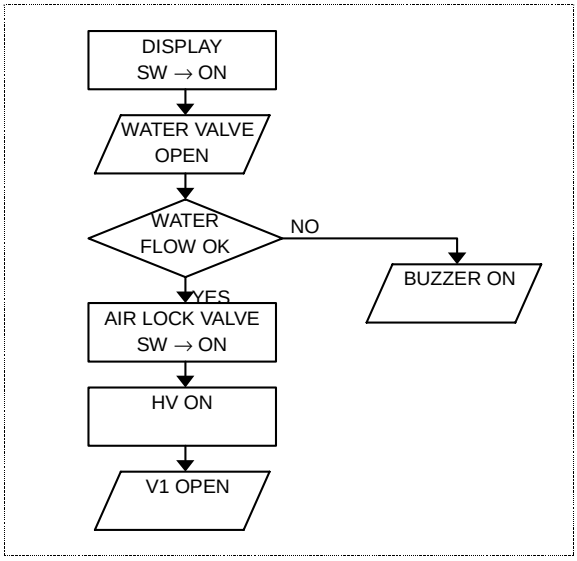

Stop Operation

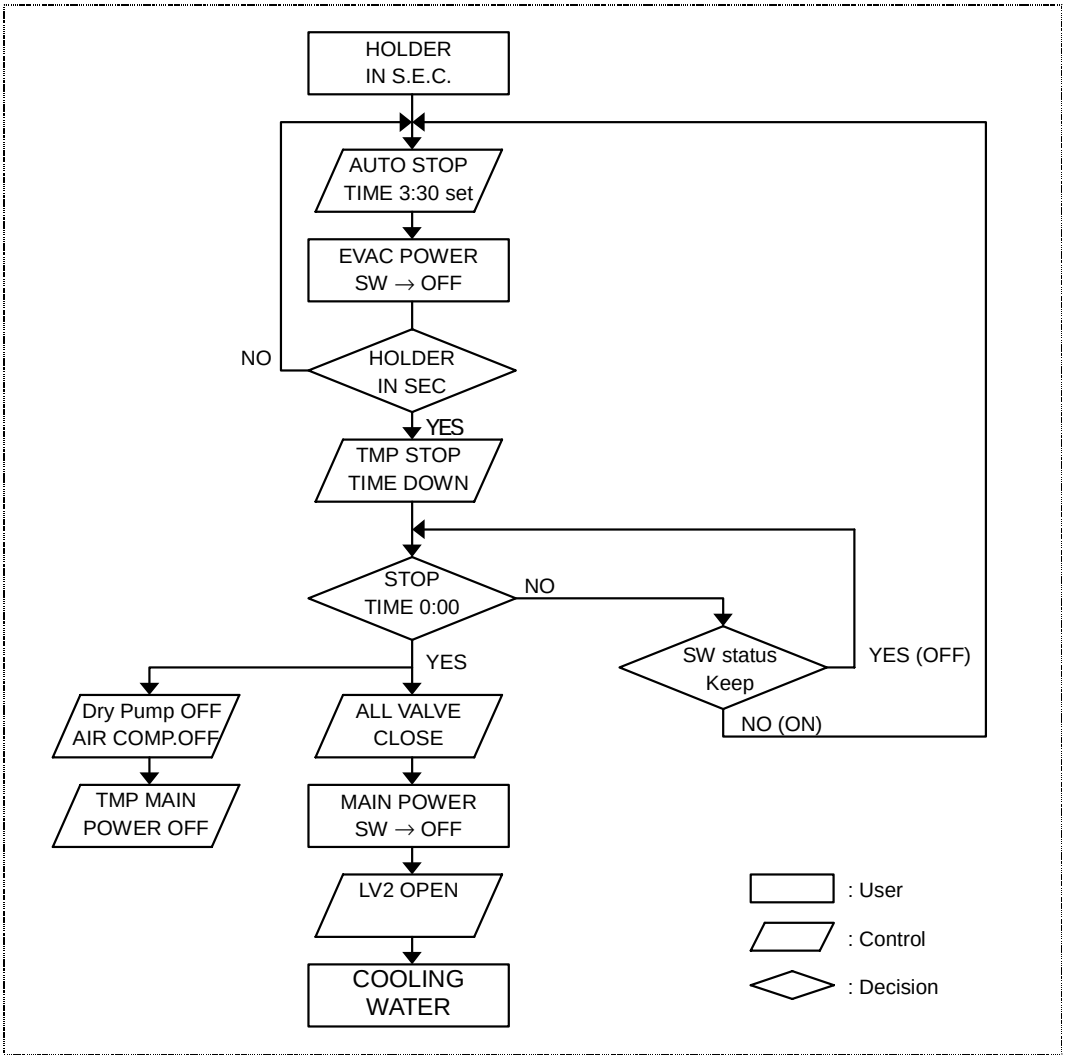

Specimen Removing Operation

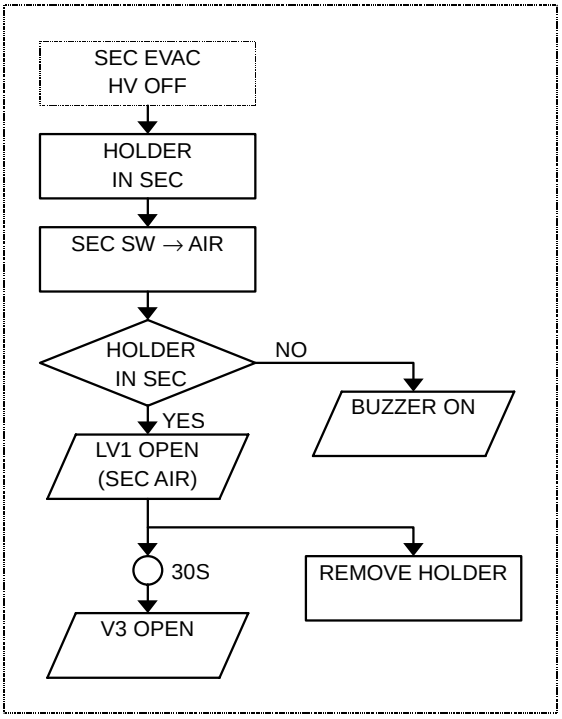

Specimen Inserting Operation

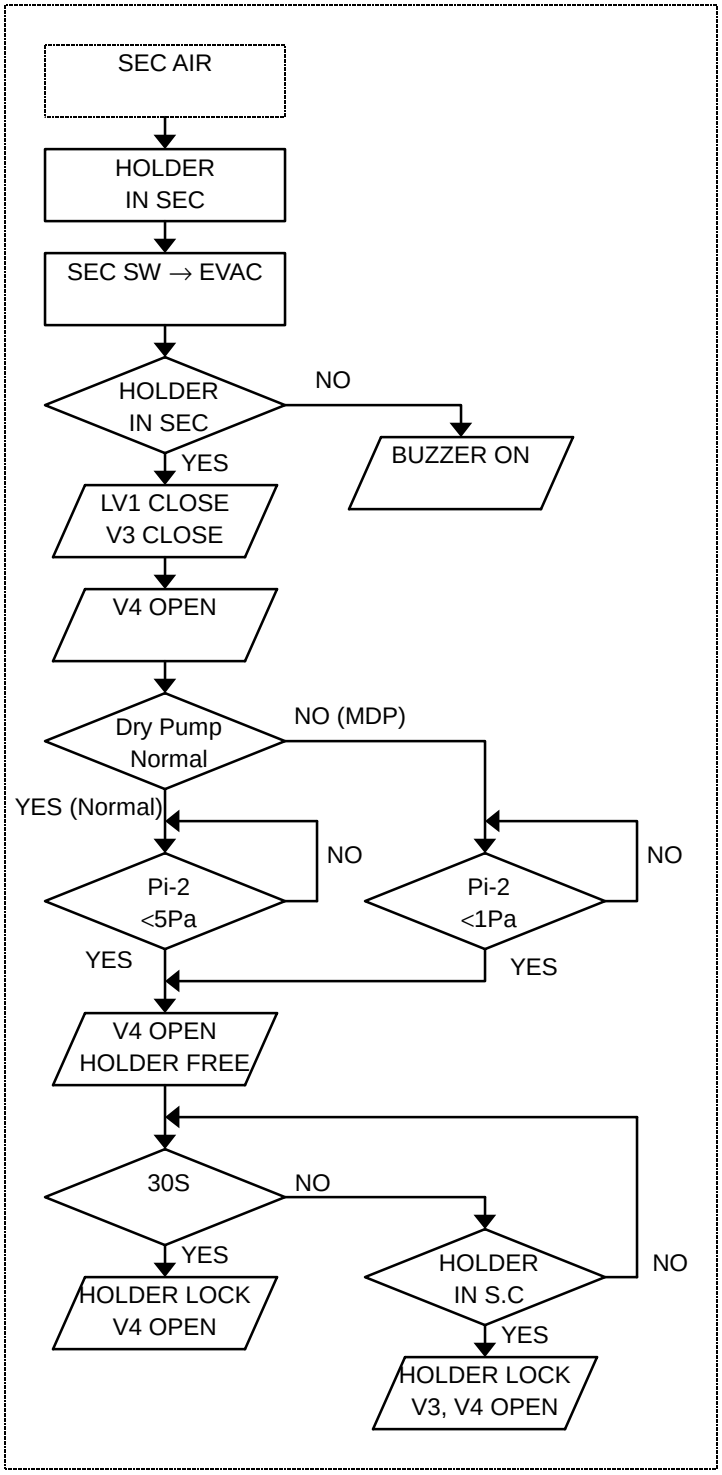

: User operation

: Control

: Decision

SC Leak Operation

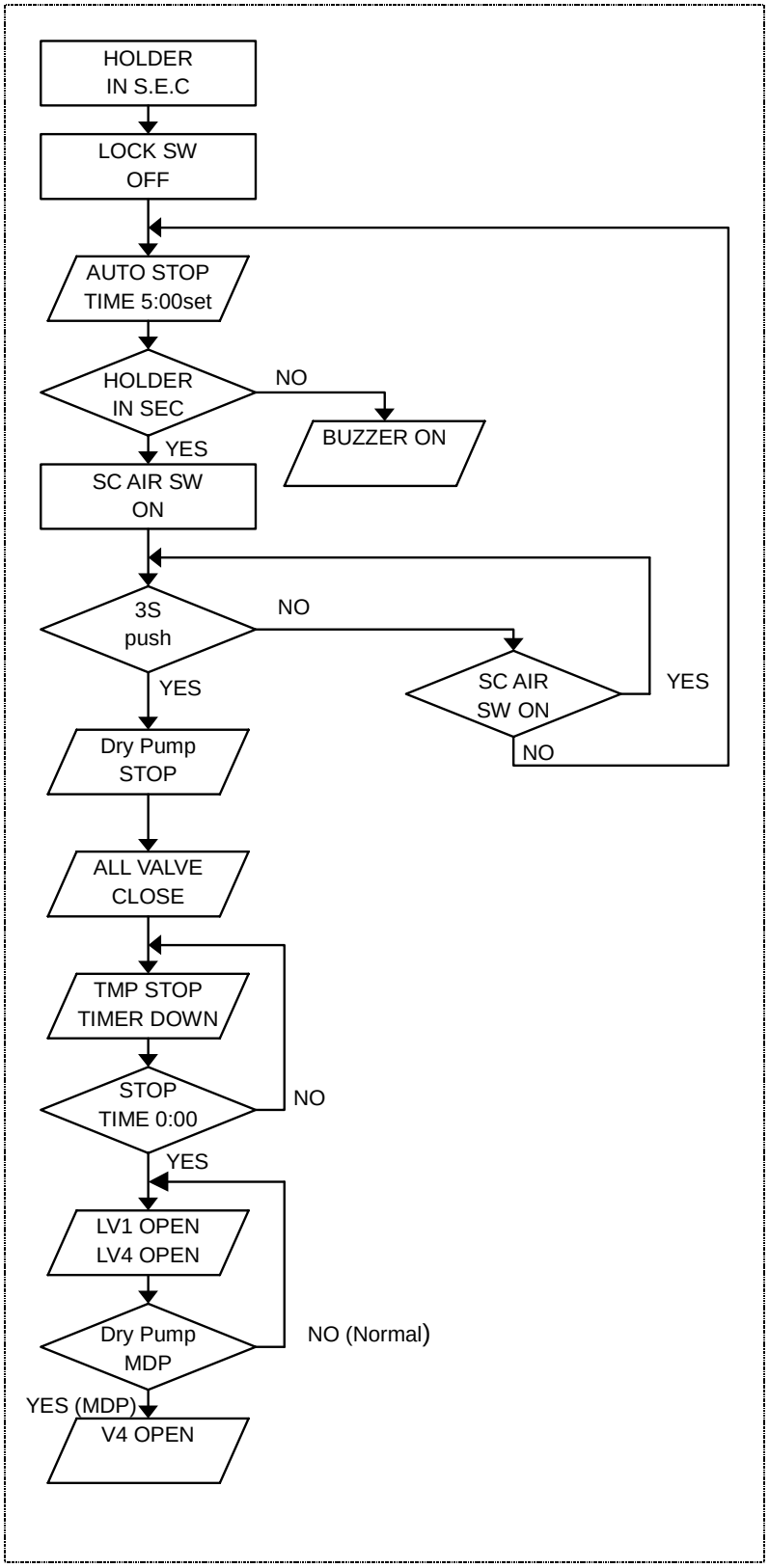

SC Evacuation Operation

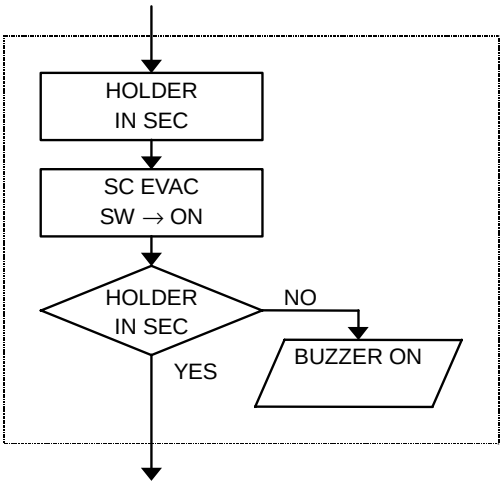

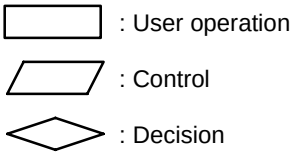

Tandem Configuration Flowchart

Starting Operation

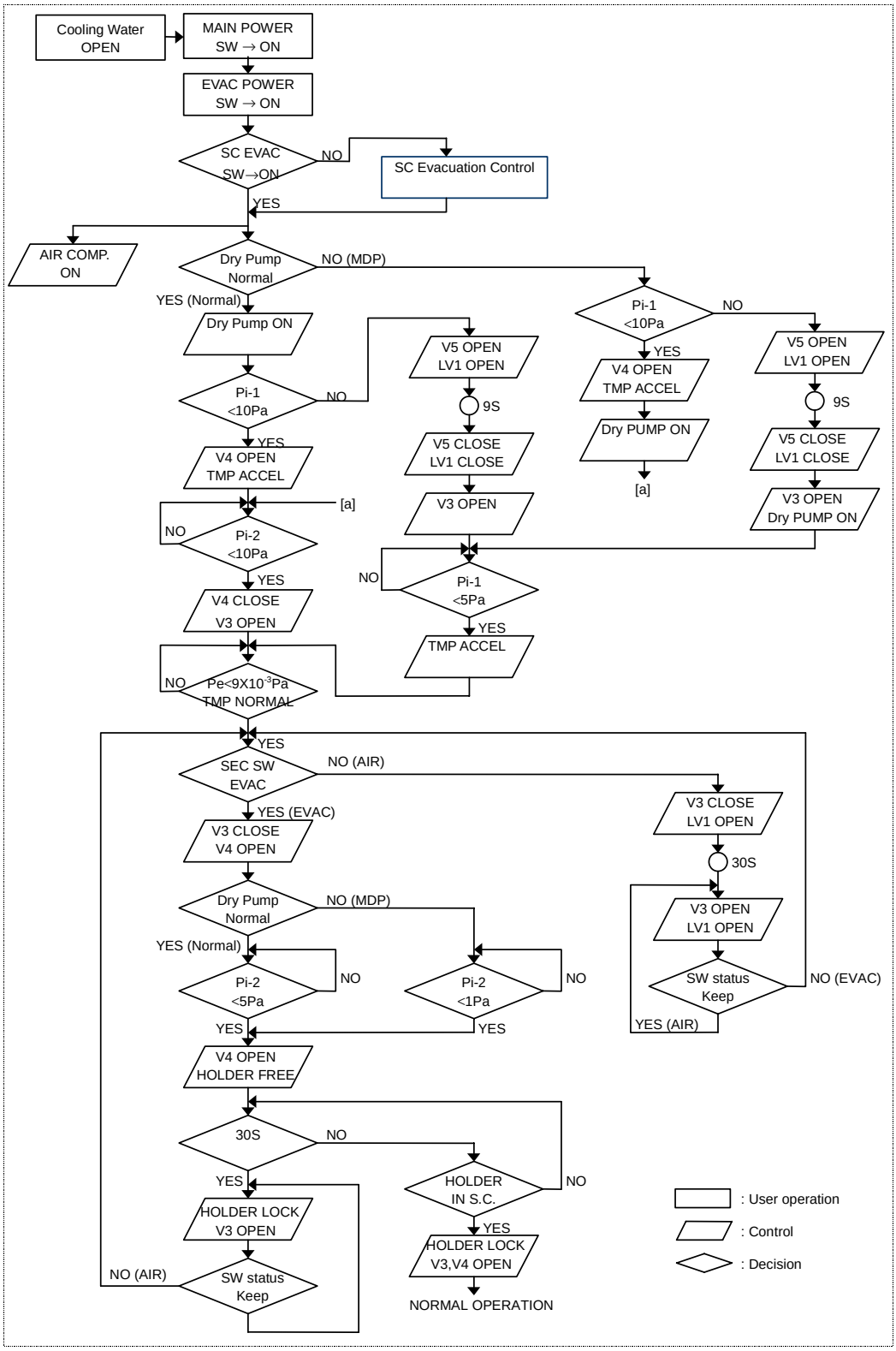

Normal Operation

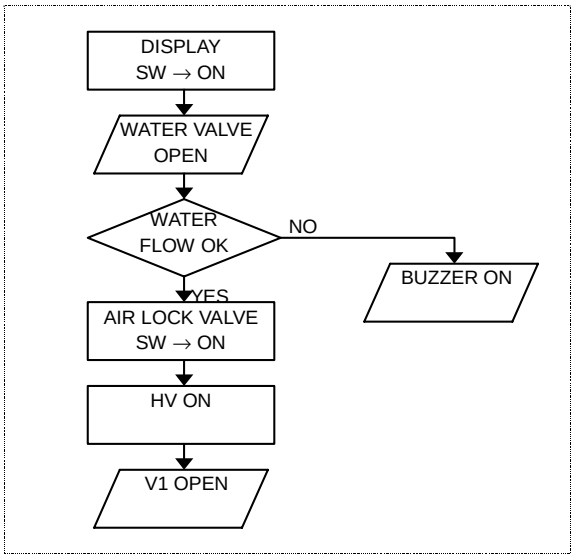

Stop Operation

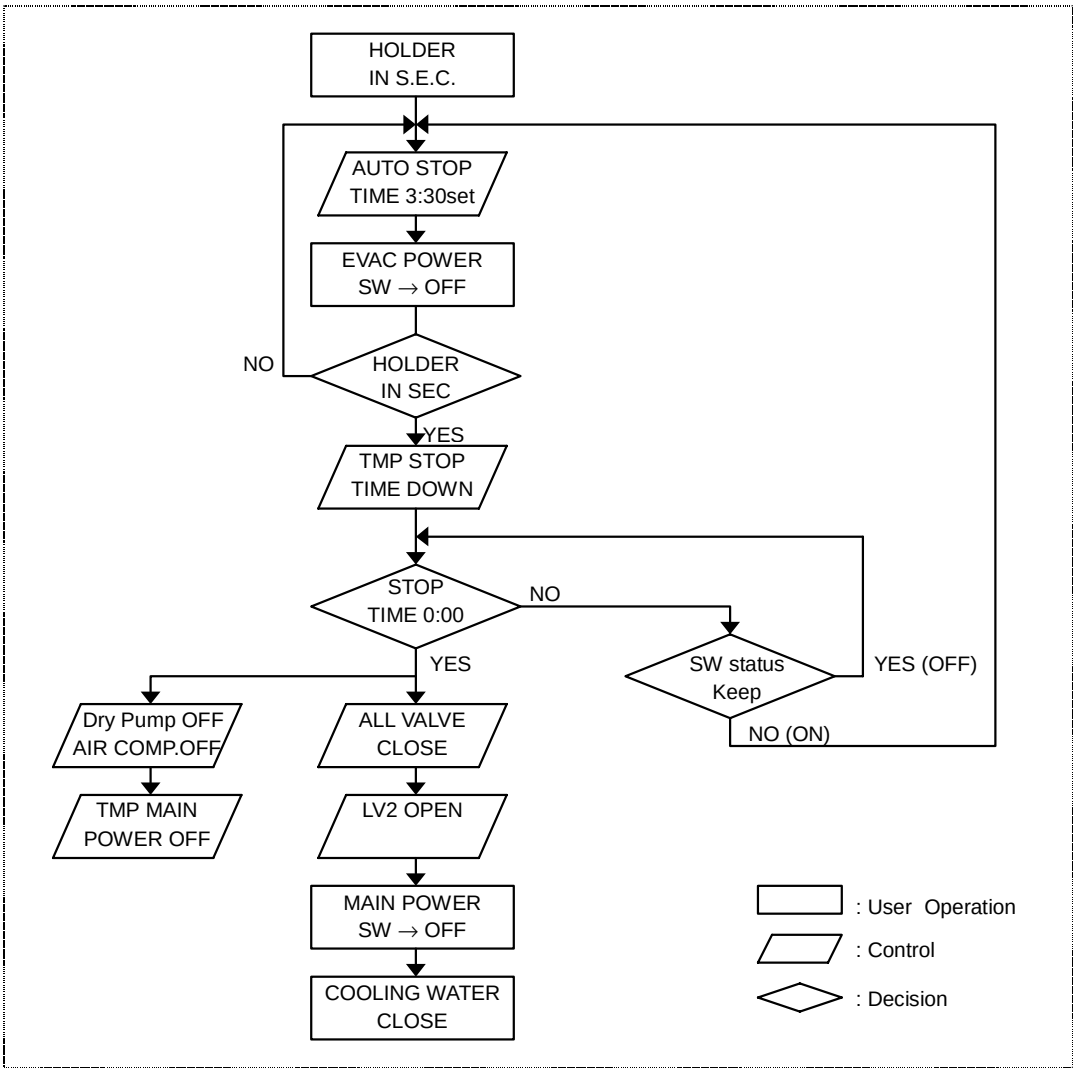

Specimen Removing Operation

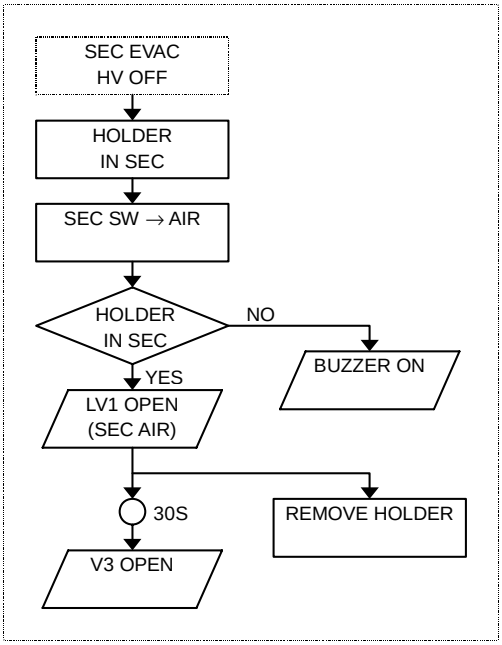

Specimen Inserting Operation

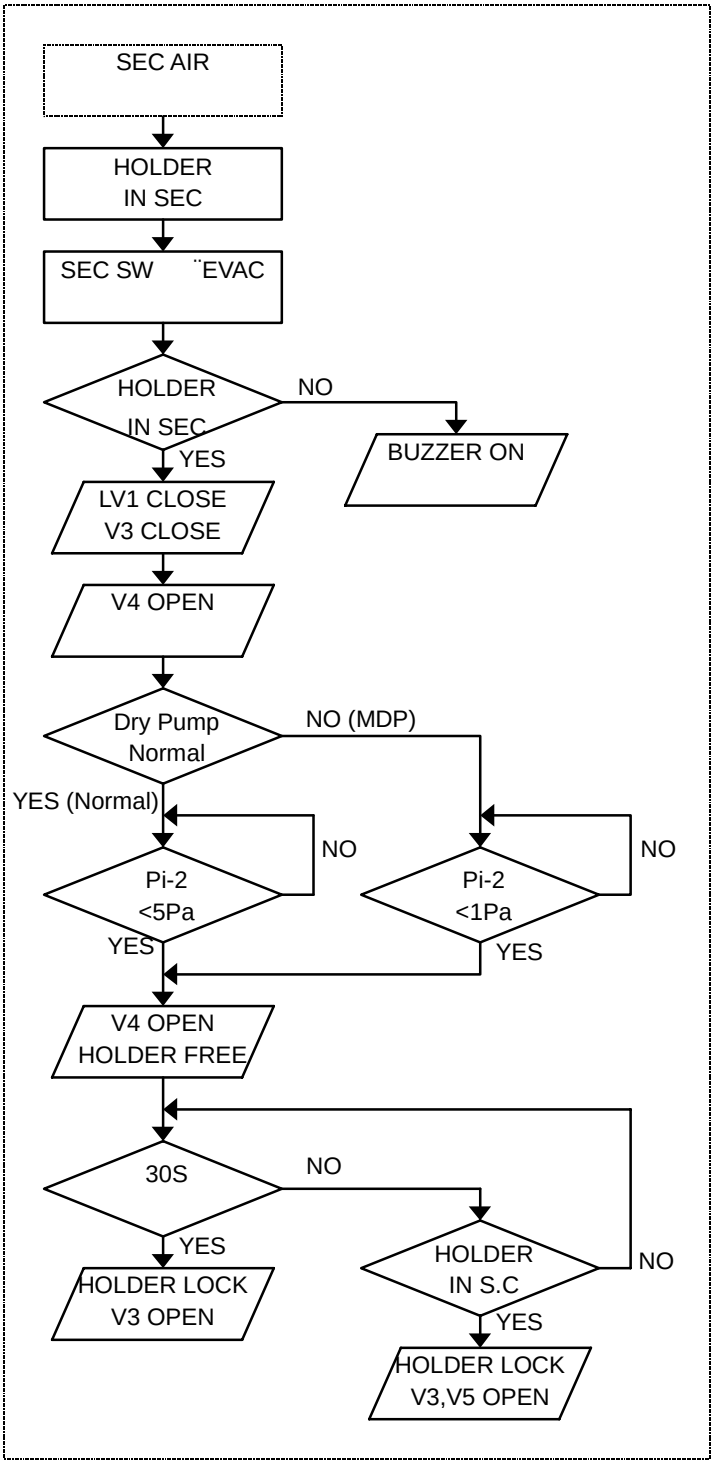

: User operation

: Control

: Decision

SC Leak Operation

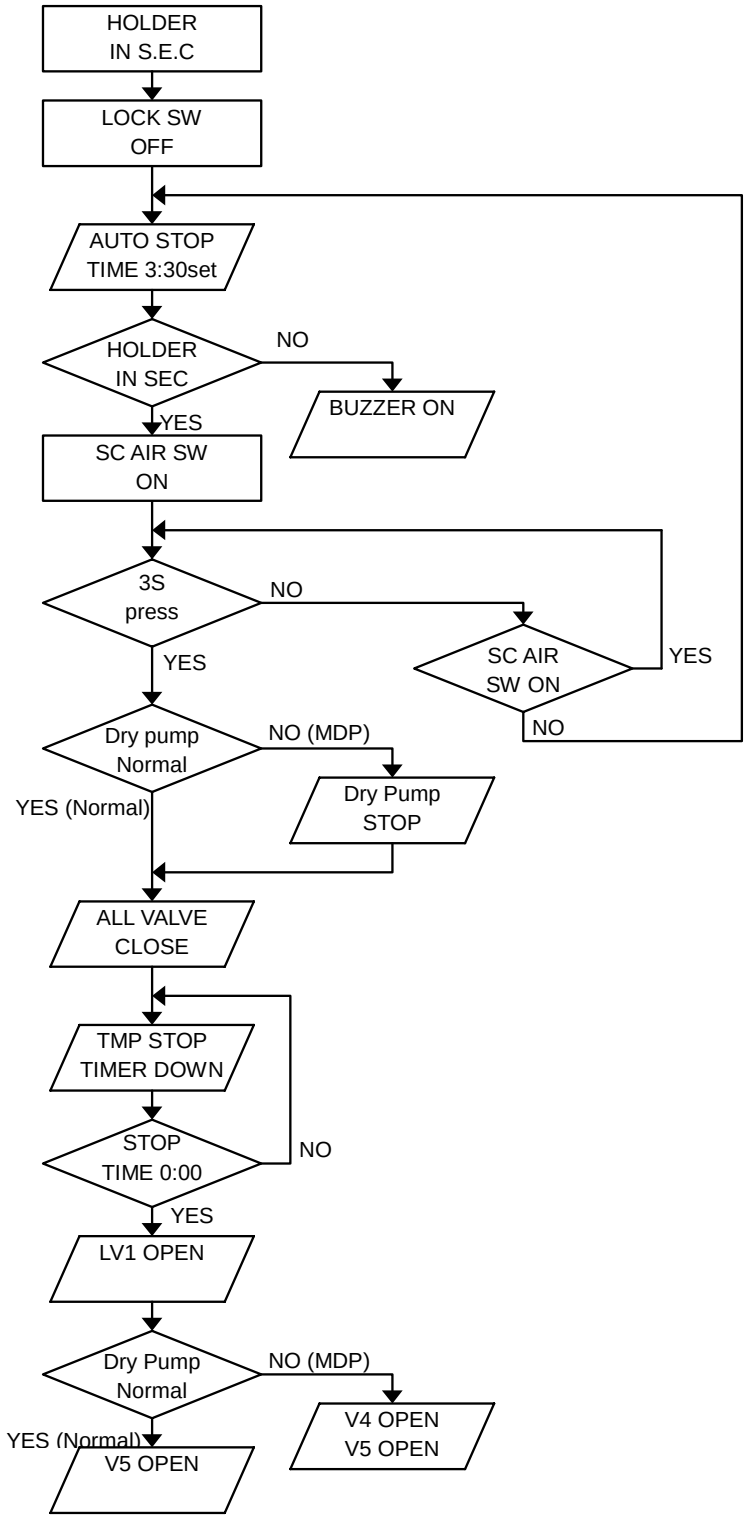

SC Evacuation Operation

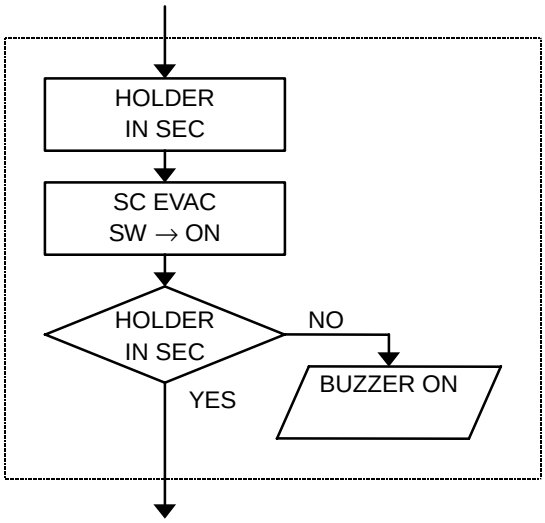

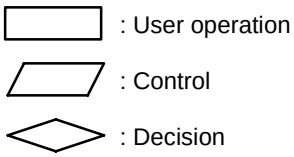

5.9.5 Error Codes

Table 5.20

Code	Cause	Status	Countermeasure
E 01	Failure on the DC power supply (+24 V)	Evacuation system will stop.	Pull out the specimen holder to the entrance of the specimen exchange chamber, and turn the EVAC POWER switch off. Then, turn it on again. If the error occurs again, contact a service engineer.
E 03	Over heating of a transformer in the power supply (the temperature sensor is an optional accessory)	Evacuation system will stop.	Pull out the specimen holder to the entrance of the specimen exchange chamber, and turn the EVAC POWER switch off. Wait for about 30 min, and check the cooling water supply. Then, turn the EVAC POWER on. If the error occurs again, contact a service engineer.
E 04	Over heating of the dry pump (the temperature sensor is an optional accessory)	Evacuation system will stop.	Pull out the specimen holder to the entrance of the specimen exchange chamber, and turn the EVAC POWER switch off. Wait for about 30 min. Then, turn the EVAC POWER on. If the error occurs again, contact a service engineer.
E 05	The dry pump stopped.	Evacuation system will stop.	Pull out the specimen holder to the entrance of the specimen exchange chamber, and turn the EVAC POWER switch off. Check if the dry pump circuit breakers are on. Wait until the turbo molecular pump stops. Then, turn the EVAC POWER on. If the error occurs again, contact a service engineer.
E 06	Blown out the fuse connecting to the penning gauge unit.	Evacuation system will stop.	Pull out the specimen holder to the pre-pumping position, and turn the EVAC POWER switch off. Then, replace the fuse and turn the EVAC POWER switch on again. If the error occurs again, contact a service engineer.
E 07	The turbo molecular pump stopped. (TMP-2) (The turbo molecular pump of 50 liter/second is an optional accessory)	Evacuation system will stop.	Turn the EVAC POWER switch off. Wait until the turbo molecular pump stops. Then, turn the EVAC POWER on. If the error occurs again, contact a service engineer.
E 08	The turbo molecular pump stopped. (TMP-1)	Evacuation system will stop.	Turn the EVAC POWER switch off. Wait until the turbo molecular pump stops. Then, turn the EVAC POWER on. If the error occurs again, contact a service engineer.
E 12	Flow of the cooling water is larger than specified rate. (The water lamp blinking)	The evacuation system will be working normally. The cooling water is used for cooling the objective lens.	Check the cooling water supply. The Water lamp is lit when water is supplied.

Code	Cause	Status	Countermeasure
E 13	Flow of the cooling water is smaller than specified rate. (The water lamp goes out)	The evacuation system will be working normally. The cooling water is used for cooling the objective lens. Objective lens current will be shut off.	Check the cooling water supply. The Water lamp is lit when water is supplied.
E 14	Insufficient air pressure for the pneumatic valves.	The Air lamp on the evacuation control panel will be off. The power of the turbo molecular pumps will be shut off.	When the system is using an air compressor, check its power supply and pressure. When using house air, check the source of the air pressure. The system will recover when the air recovers at specific pressure.
E 17	S.E.C.AIR switch is on when the specimen holder is in the specimen chamber.	All valves are closed.	Pull out the specimen holder to the entrance of the specimen exchange chamber. Or set to EVAC the EVAC/AIR switch on the specimen exchange chamber.
E 18	S.C. LOCK switch on the evacuation control panel is released when the specimen holder is in the specimen chamber	Alarm buzzer only.	Pull out the specimen holder to the entrance of the specimen exchange chamber. Or set to LOCK the S.C. LOCK switch on the evacuation control panel.
E 19	The specimen holder is not at the entrance of the specimen exchange chamber when EVAC process was started.	The evacuation system will not be working normally.	Pull out the specimen holder to the entrance of the specimen exchange chamber.
E 20	S.C. LOCK switch on the evacuation control panel is set to LOCK when the specimen chamber is in the air leak process.	Alarm buzzer only.	Release the S.C. LOCK switch on the evacuation control panel until air leak is completed.
E 25	EVAC power is on when the specimen holder is out the specimen chamber.	The evacuation system will not be off.	Insert the specimen holder to the entrance of the specimen exchange chamber.
E 31	Gun baking was started while the HV cable head is not removed.	Gun baking power supply is shut off.	Press the Baking stop switch. Remove the HV cable from the electron gun and insert it to the HV cable holder at the side of the display unit. And then start gun baking again.
E 32	Covers around the electron gun are not attached.	Gun baking power supply is shut off.	Press the Baking stop switch. Attach covers to the electron gun part. And then start gun baking again.
E 33	Over heating of baking heaters. (when optional temperature sensor is installed)	Baking power supply will be shut off.	Stop gun baking. Contact a service engineer.

Code	Cause	Status	Countermeasure
E 34	Ion pump 1 power supply is shut off while gun baking. The gun baking may cause deterioration of gun vacuum and in some cases ion pump power supply will be shut off.	Baking power supply will be shut off.	Stop gun baking. Wait for a few hours. Restart ion pumps. And then, start gun baking again.
E 35	Ion pump 1 vacuum degraded.	When vacuum of the ion pump 1 degraded to lower than the specified value, baking power supply will be stopped.	Stop gun baking. Wait for a few hours. Restart ion pumps. And then, start gun baking again.
E 36	Cover around the trap heat is not attached. (the trap heat is an optional accessory)	Trap heat power supply is shut off.	Press the Trap Heat stop switch. Attach covers to the trap heat part. And then start trap heat again.
E 37	Gun baking was started while the ECO mode is carrying out.	Baking power supply will be shut off.	Stop gun baking. Wait for a few hours. Restart ion pumps. And then, start gun baking again.
E 38	Baking timer is not correct. (Condition INNER TIME > OUTER TIME + 2)	Baking power supply will be shut off.	Press the Baking stop switch. Set the baking timer correctly, and then start gun baking again.
E 51	Failure of the PI1		Contact a service engineer.
E 52	Failure of the PI2		Contact a service engineer.
E 97	EVAC power is off when the specimen holder is in the specimen chamber.	The evacuation system will not be off.	Pull out the specimen holder to the entrance of the specimen exchange chamber.
E 99	Error of ECO mode caused by: 1. EVAC power off 2. The specimen holder is in the specimen chamber. 3. While the baking is carrying out. 4. SEC EVAC/AIR switch is set to AIR. 5. Timer setting is failed	ECO mode will not start.	Settle the problem, and then start ECO mode

6 Mechanical Configuration

6.1 Main Unit Mechanical Configuration

Figures 6-1 and **6-2** show a mechanical configuration cross-sectional diagram of the main unit and a configuration diagram of the electron optics system.

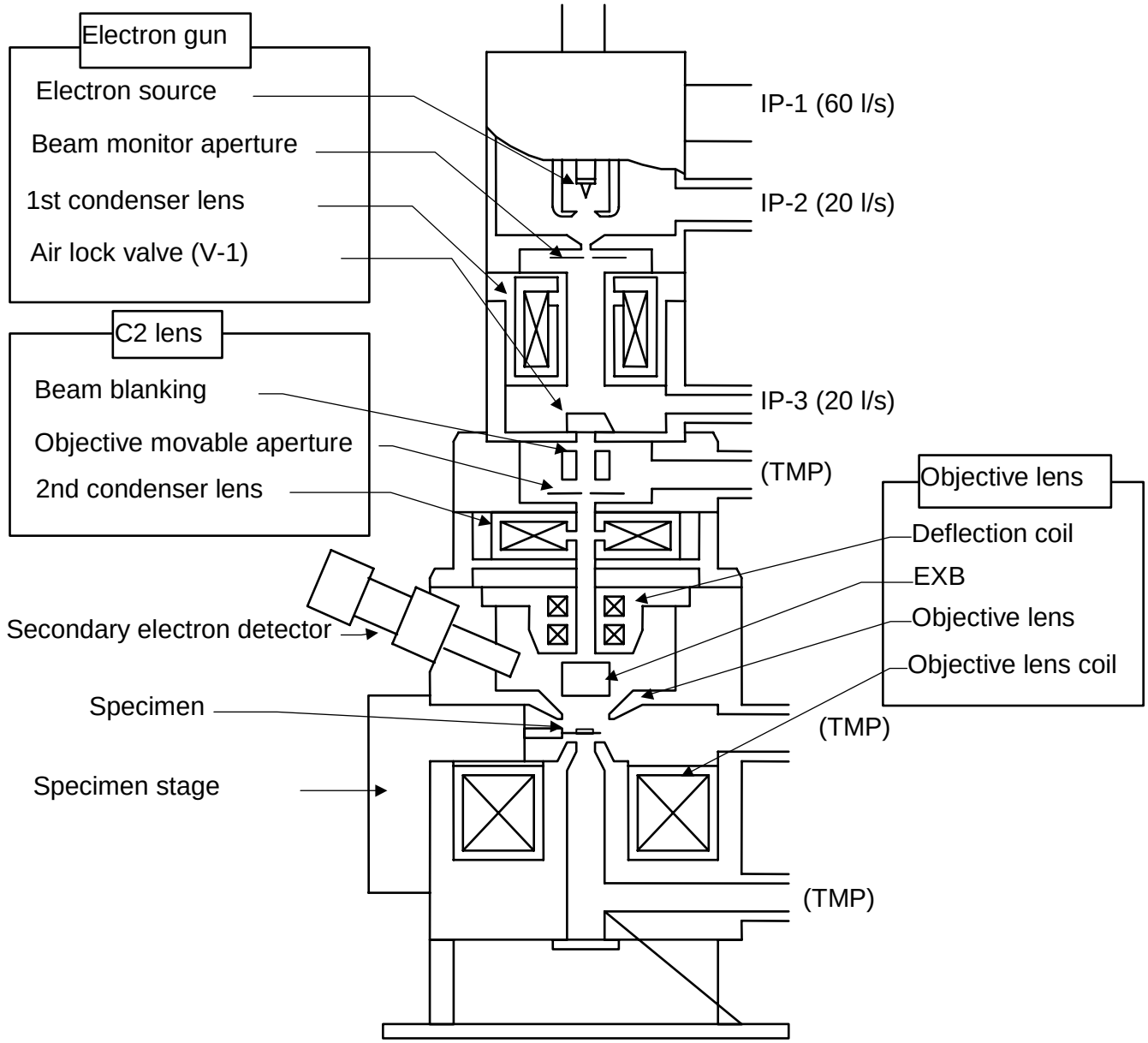

Figure 6-1: Main Unit Mechanical Configuration Cross-sectional Diagram

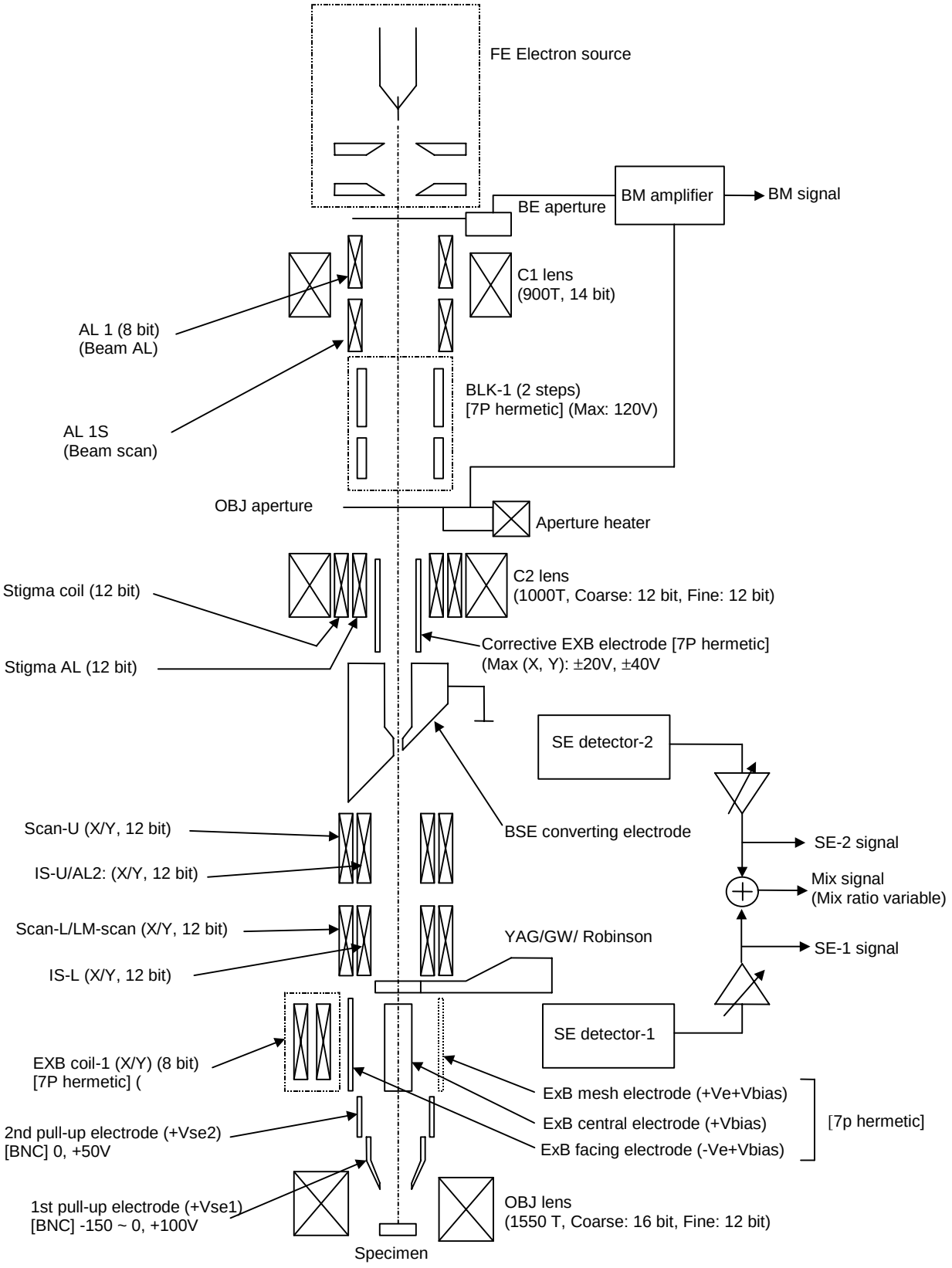

Figure 6-2: Electron Optic System Configuration Diagram

6.2 Main Unit Structures

6.2.1 Electron Gun Structure

The electron gun consists of a cathode (tip), a first anode, a second anode, a beam monitor aperture, a first condenser lens, and a beam alignment coil. The cathode (tip) and the first condenser lens can be moved horizontally through the use of adjustment screws for an axial and electro-optical alignment.

Figure 6-3 shows a configuration cross-sectional diagram of the electron gun.

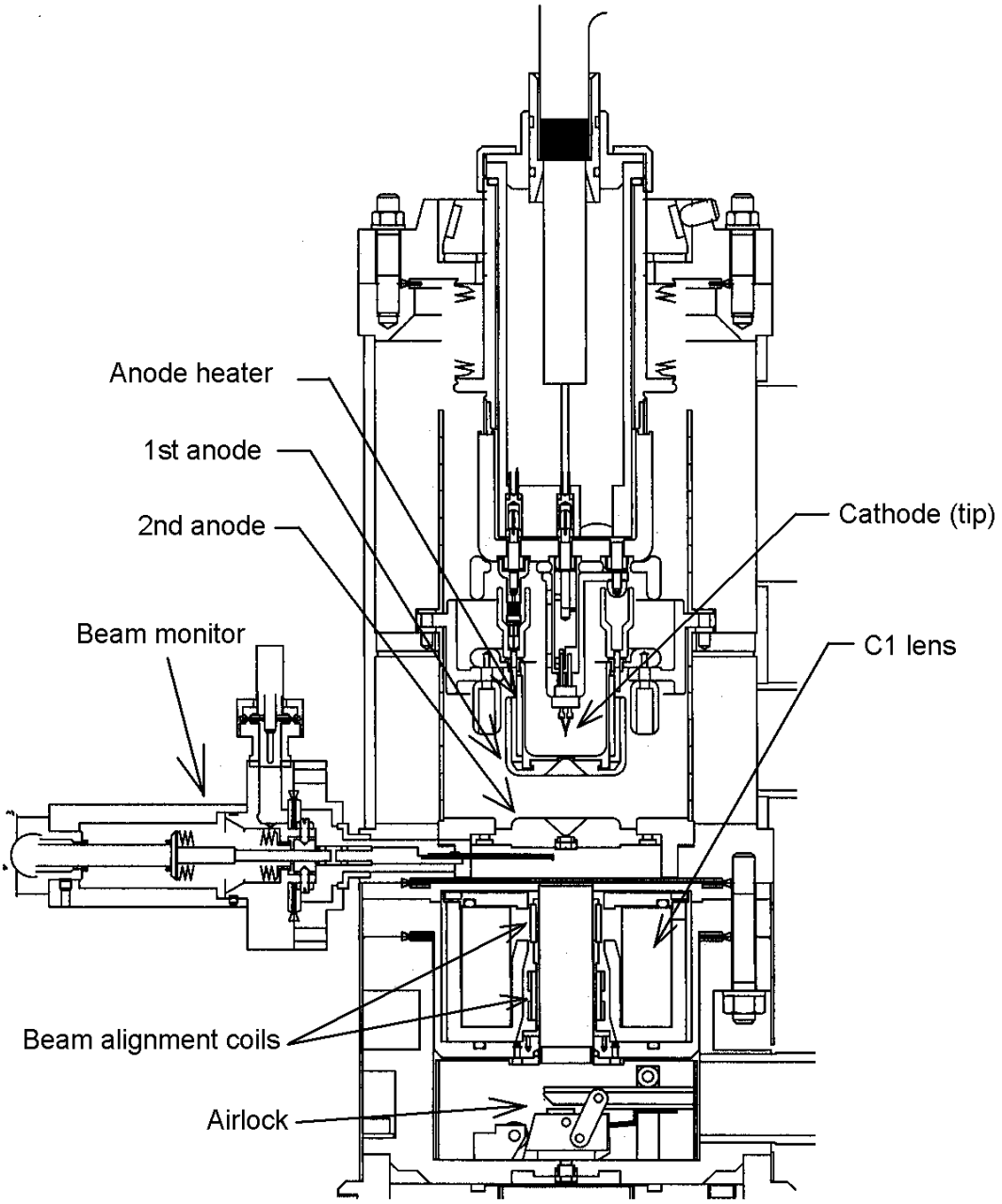

Figure 6-3: Electron Gun Configuration Cross-sectional Diagram

6.2.2 C2 Lens Unit Structure

This unit consists of a beam blanking coil, a movable objective aperture, a second condenser lens, a stigmator, aberration-corrected coil, and a stigma alignment coil. The second condenser lens can be moved horizontally through the use of adjustment screws for an axial and electro-optical alignment.

Figure 6-4 shows a configuration cross-sectional diagram of the C2 lens unit.

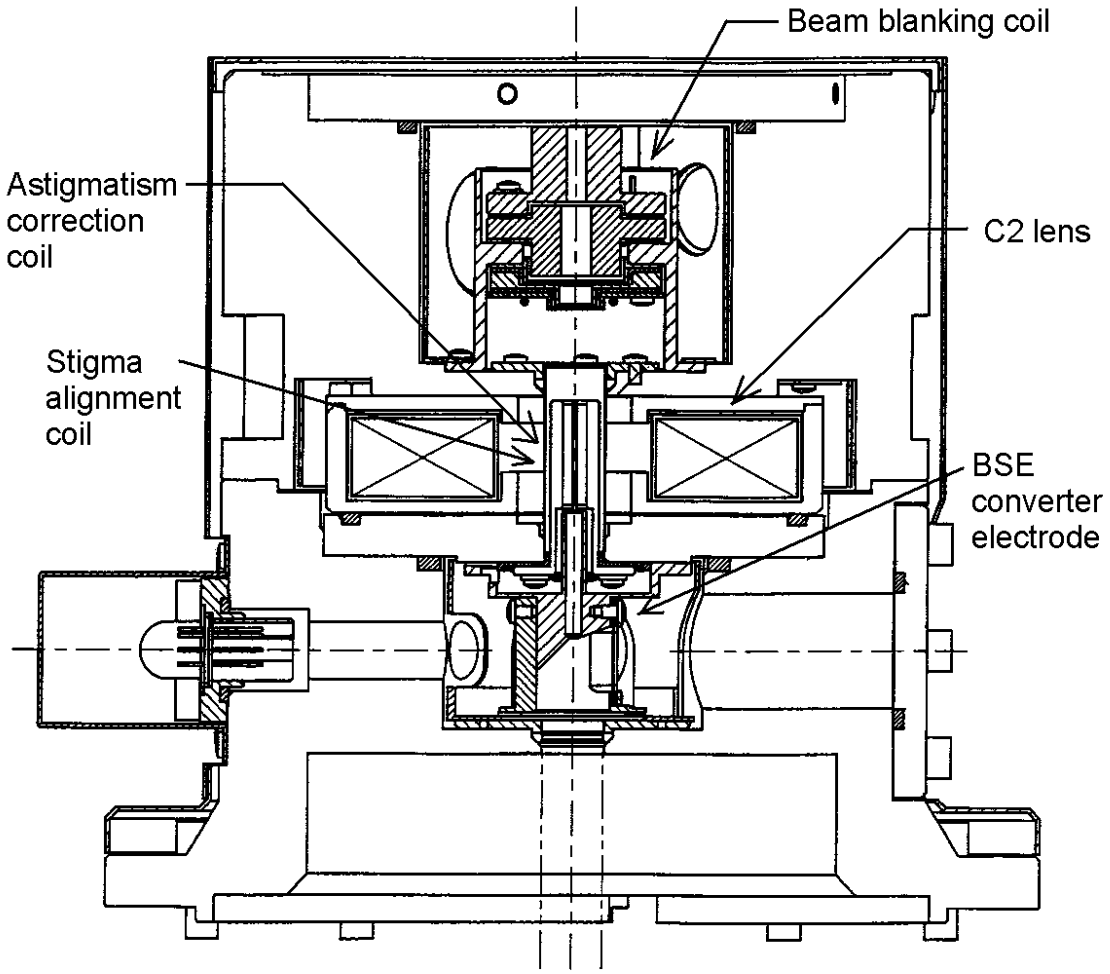

Figure 6-4: C2 Lens Unit Configuration Cross-sectional Diagram

6.2.3 Objective Lens Unit Structure

The objective lens unit consists of a deflection coil, an image shift coil, an ExB coil, an objective lens (pole piece), and an objective lens coil. A block-type pole piece is used in the objective lens. The objective lens unit has a structure that allows cooling water to flow in order to prevent heat generation around the objective lens coil.

Figure 6-5 shows a configuration cross-sectional diagram of the objective lens unit.

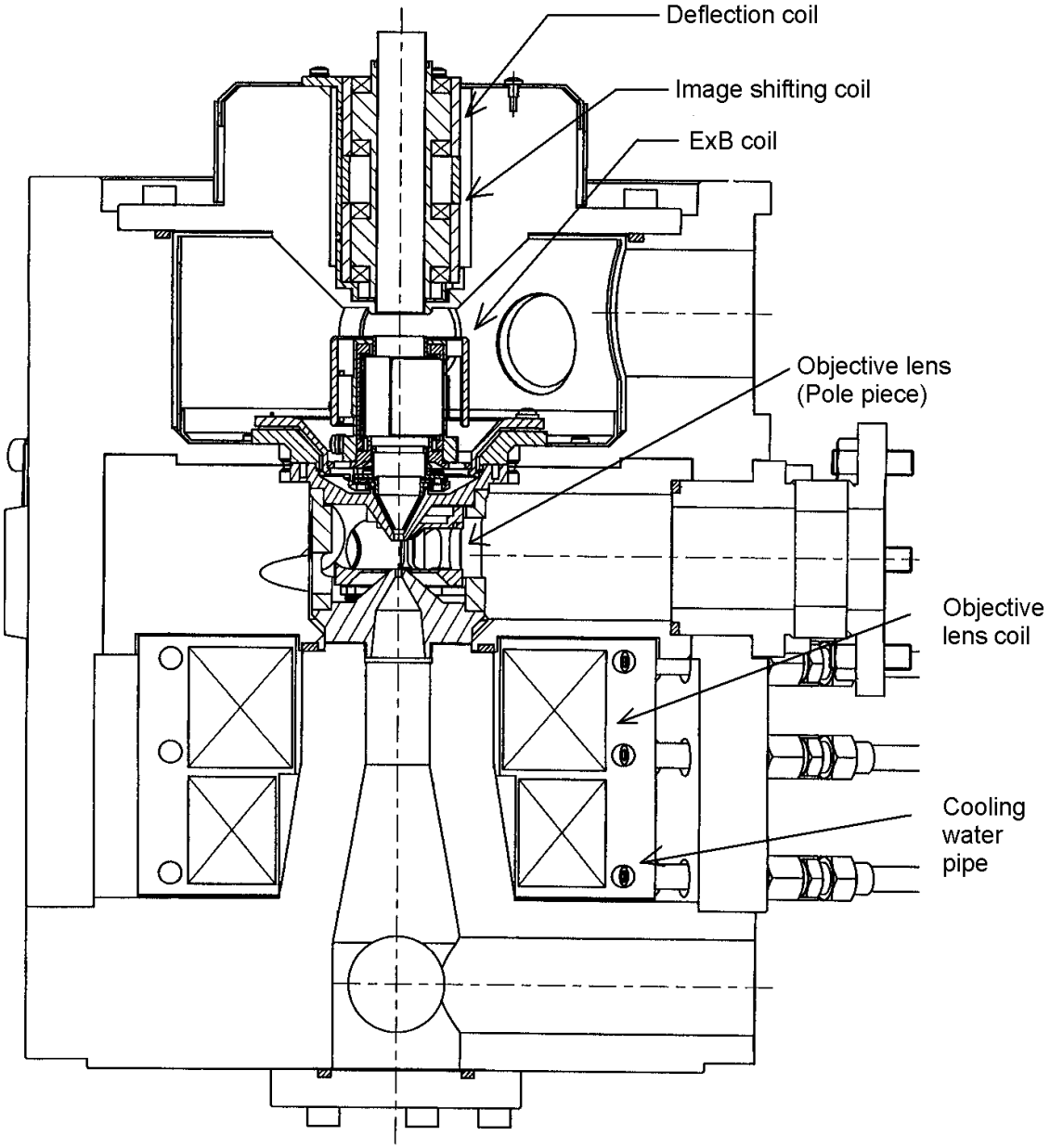

Figure 6-5: Objective Lens Unit Configuration Cross-sectional Diagram

6.2.4 Specimen Goniometer Stage Structure

The specimen goniometer stage features a side-entry design; it consists of T, Y, Tilt, and ΔZ mechanisms.

Figure 6-6 shows a configuration cross-sectional diagram of the specimen goniometer stage.

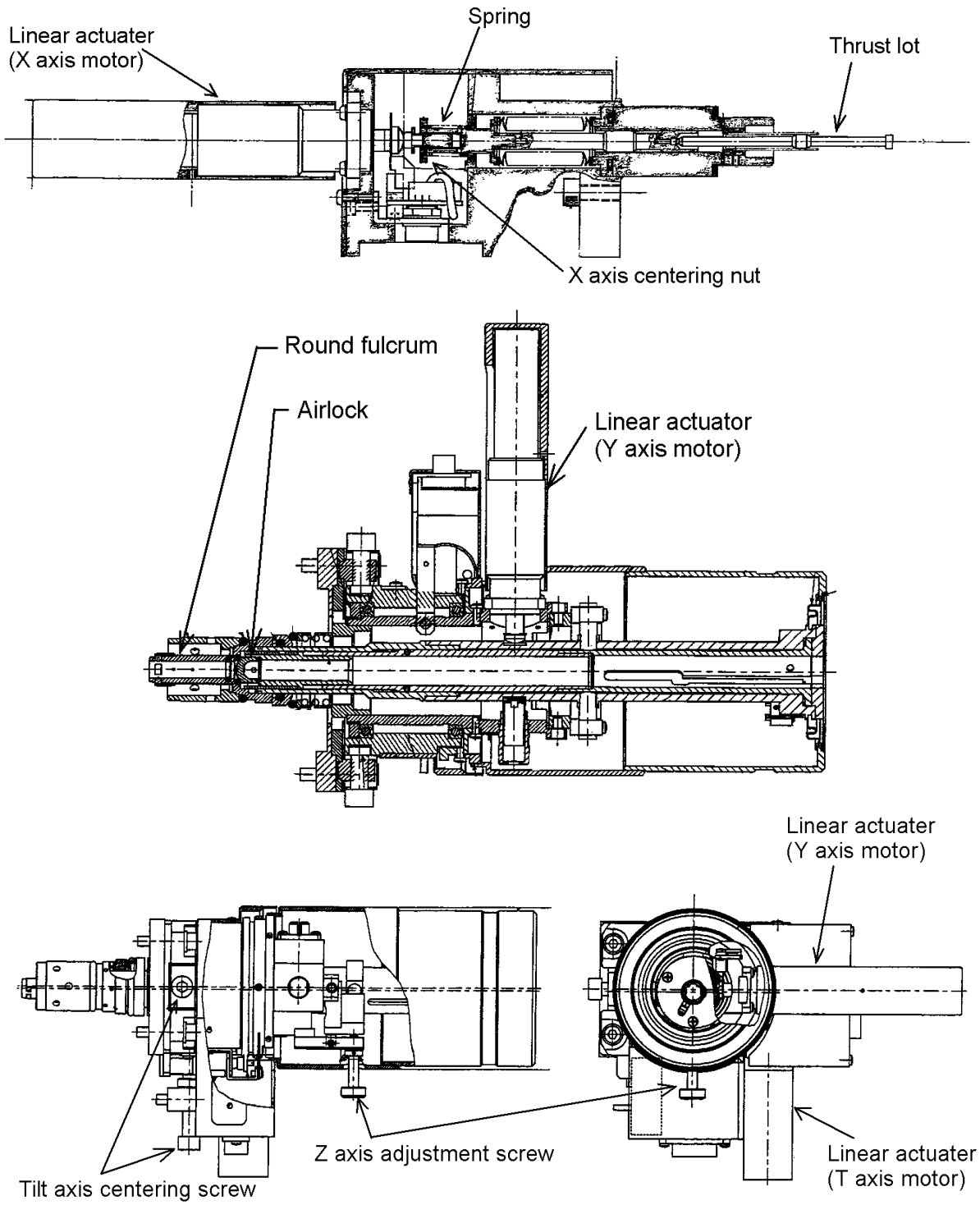

Figure 6-6: Specimen Goniometer Stage Configuration Cross-sectional Diagram

6.2.5 Beam Blanking Unit Structure

Figure 6-7 shows a cross-sectional diagram of the beam blanking unit.

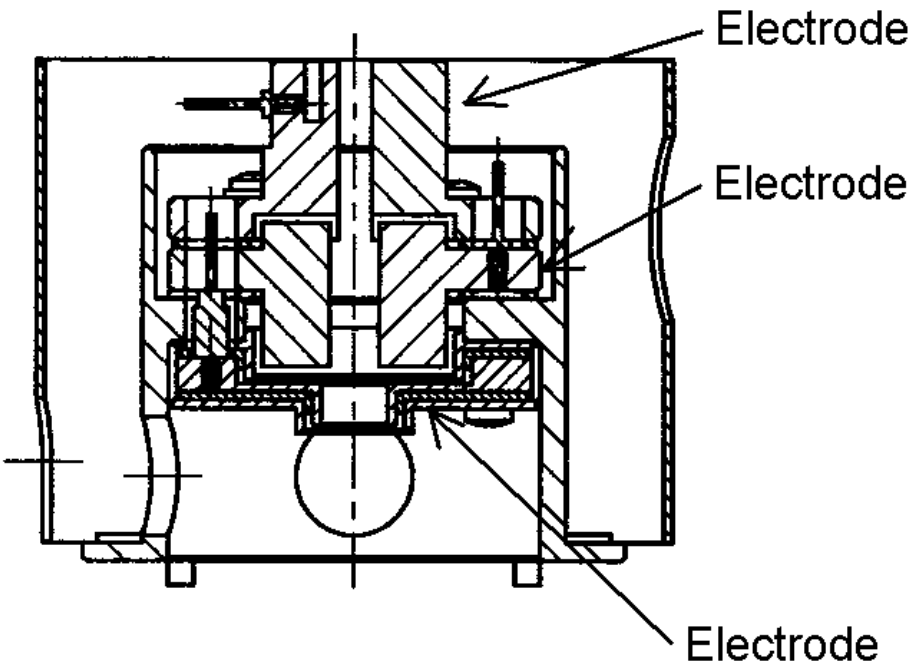

Figure 6-7: Beam Blanking Unit Cross-sectional Diagram

6.2.6 ExB Coil Unit Structure

Figure 6-8 shows a cross-sectional diagram of the ExB coil unit.

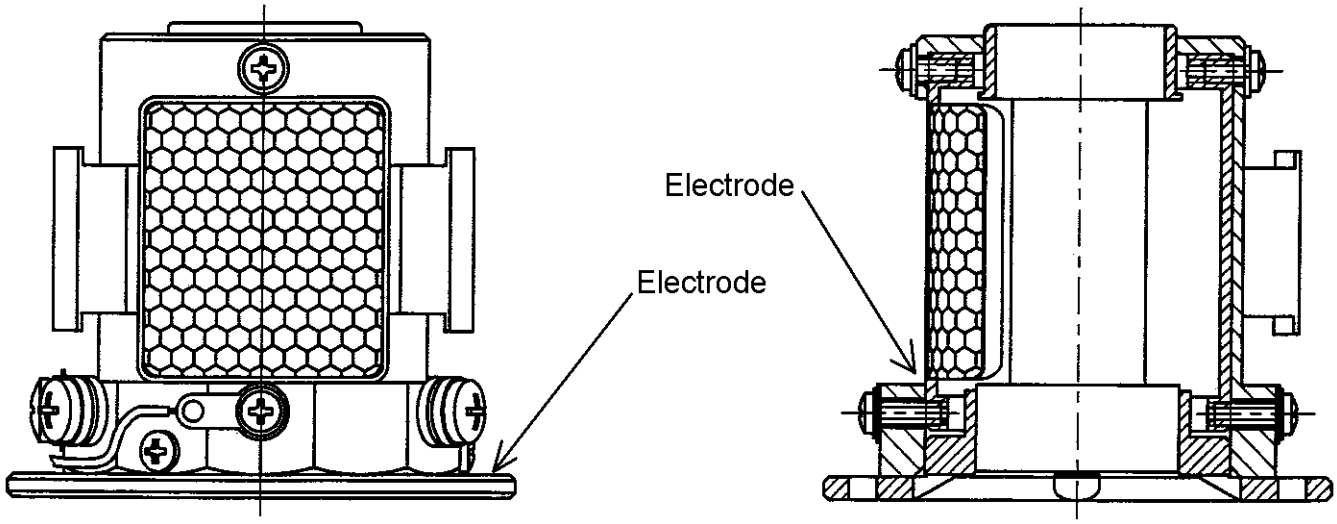

Figure 6-8: ExB Coil Unit Cross-sectional Diagram

6.2.7 Beam Monitor Aperture Unit Structure

The aperture plate is a molybdenum plate that is 10µm thick, with the following hole diameters: 0.1 mm, 0.1 mm, 0.1 mm, and 0.1 mm. The aperture unit can be moved horizontally through the use of a tuning knob for an axial and electro-optical alignment.

Figure 6-9 shows a cross-sectional diagram of the beam monitor aperture unit.

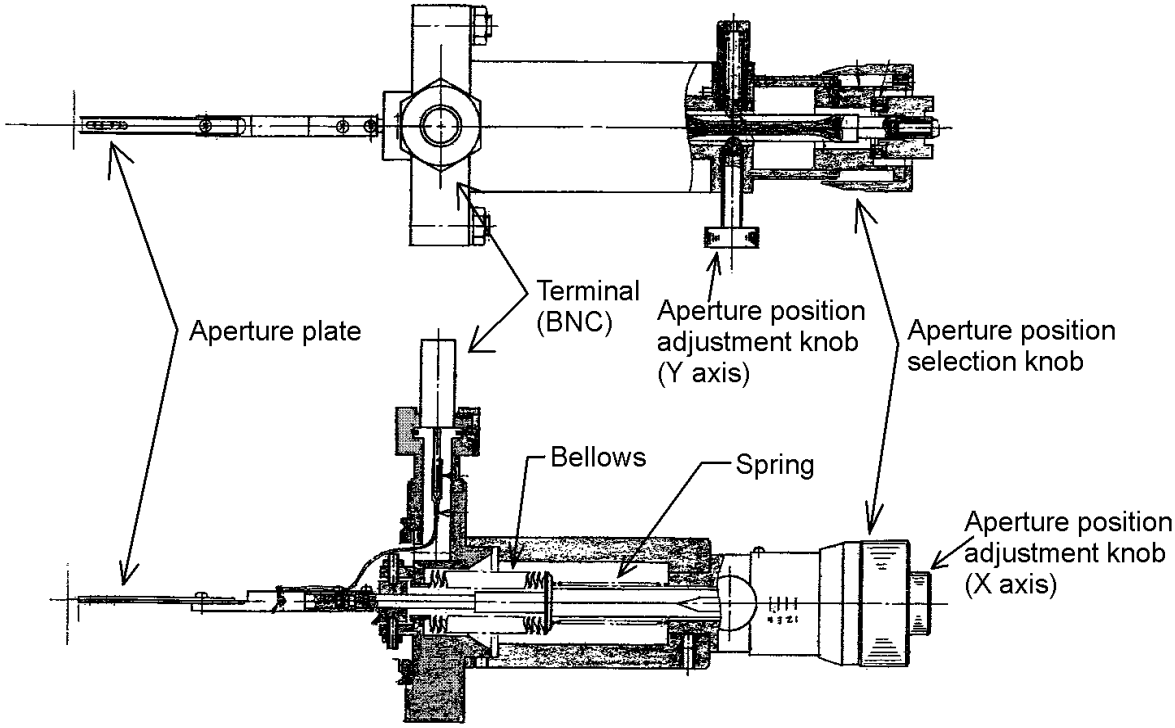

Figure 6-9: Beam Monitor Aperture Unit Cross-sectional Diagram

6.2.8 Movable Objective Aperture Unit Structure

The aperture plate is a molybdenum plate that is 10µm thick, with the following hole diameters: 30 µm, 50 µm, 50 µm, and 100 µm. The aperture unit can be moved horizontally through the use of a tuning knob for an axial and electro-optical alignment.

Figure 6-10 shows a cross-sectional diagram of the movable objective aperture unit.

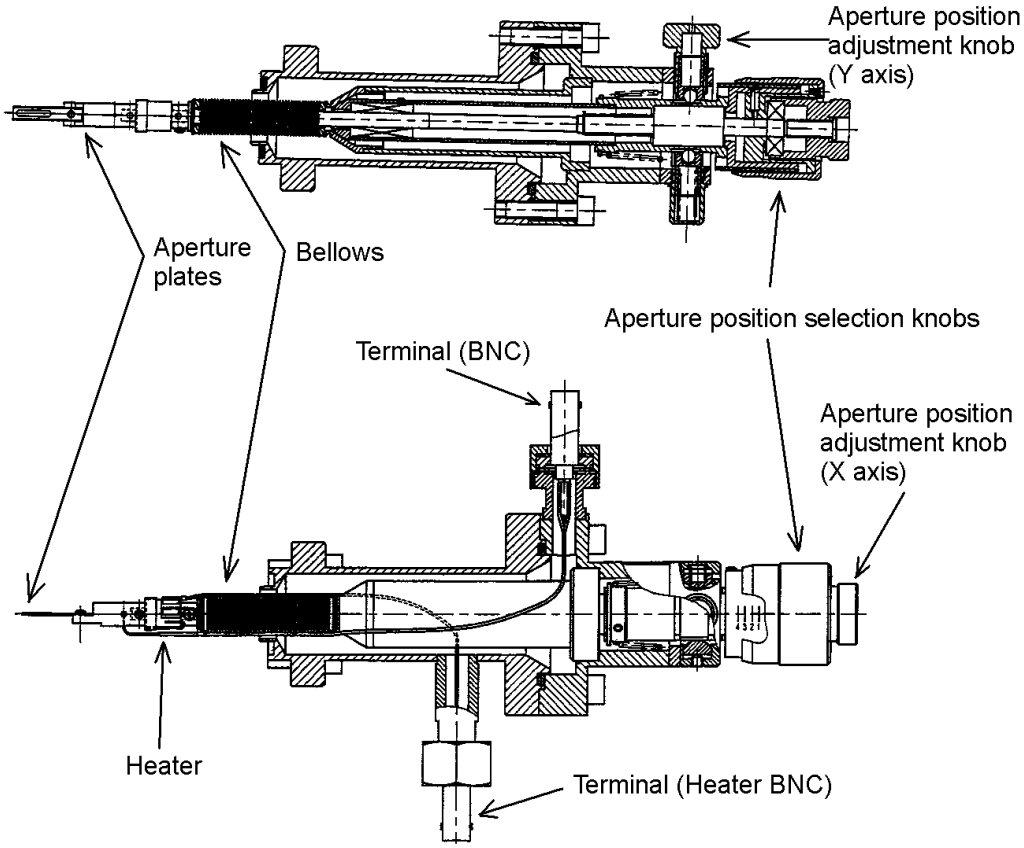

Figure 6-10: Movable Objective Aperture Unit Cross-sectional Diagram

6.2.9 Secondary Electron Detector Structure

The secondary electron detector consists of a scintillator that converts secondary electrons into light, and a photoelectric amplifier tube.

Figure 6-11 shows a cross-sectional diagram of the secondary electron detector.

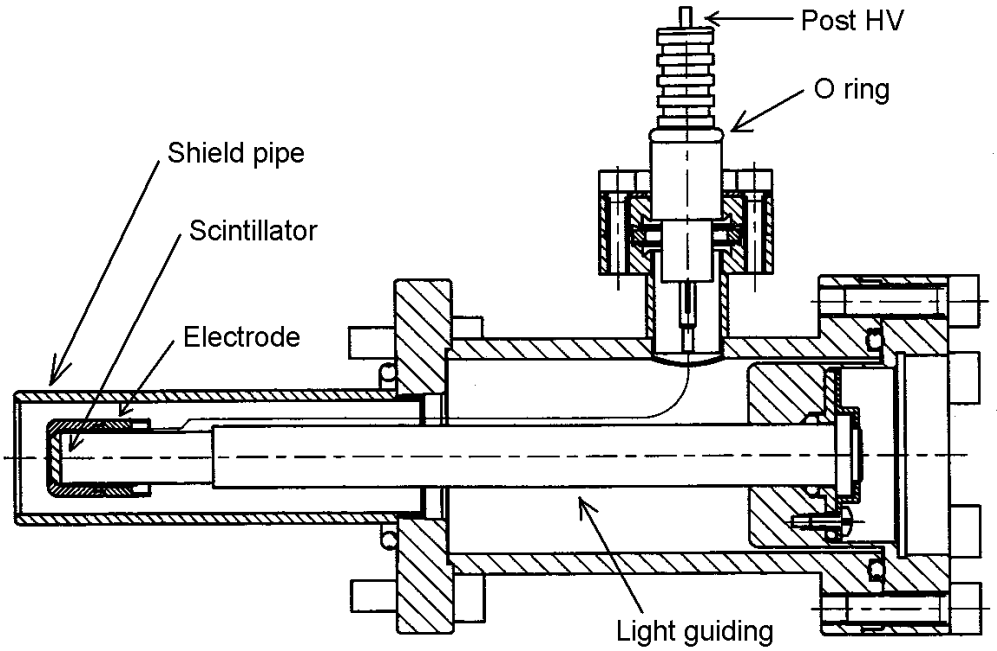

Figure 6-11: Secondary Electron Detector Cross-sectional Diagram

7 Software

7.1 System Configuration

Figure 7-1 shows the system configuration of the S-5200.

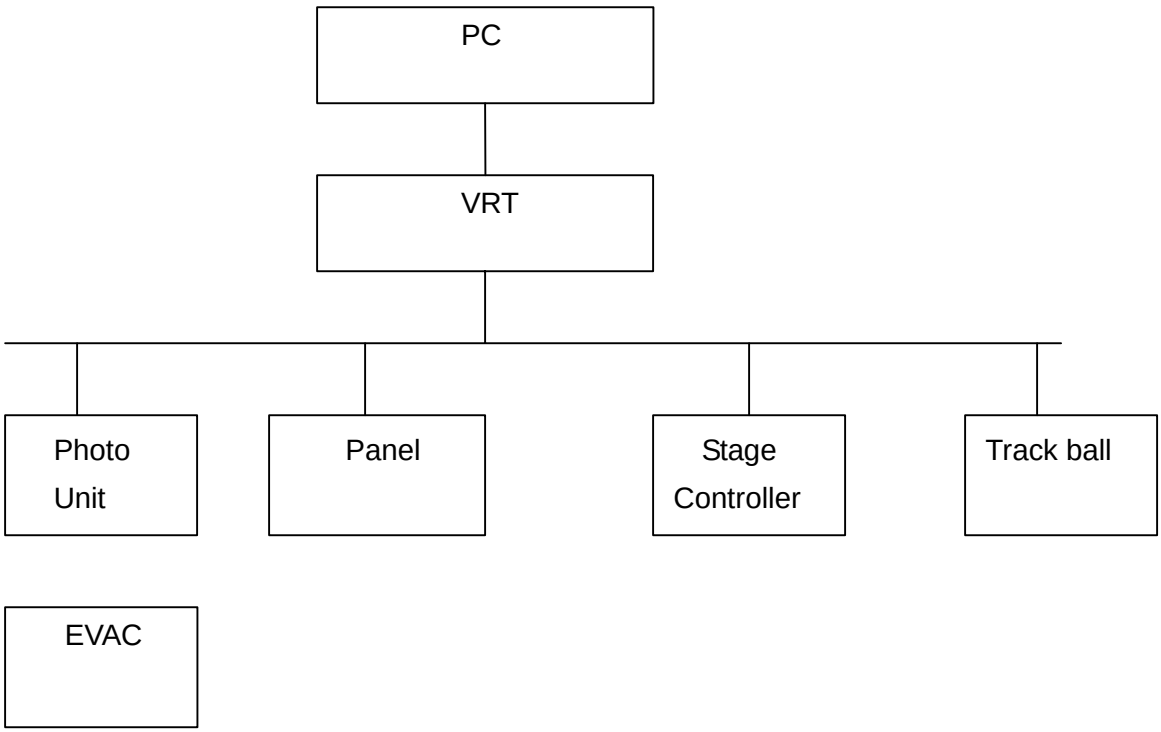

Figure 7-1: System Configuration

PC:	IBM PC AT-compatible personal computer running under Windows NT 4.0. For SEM operations and quick image processing.
VRT	Control computer made by (Instruments), running under VxWorks and an electro-optical system. For image memory operations.
Photo Unit:	Photo unit.
Panel:	Operator panel for persons who are familiar with knob-based adjustments.
Stage Controller:	Specimen micro-adjustment unit.
Trackball:	Trackball for the specimen micro-adjustment unit.
EVAC:	Evacuation system.

7.2 Software Configuration

Figure 7-2 shows the software configuration of the S5200.

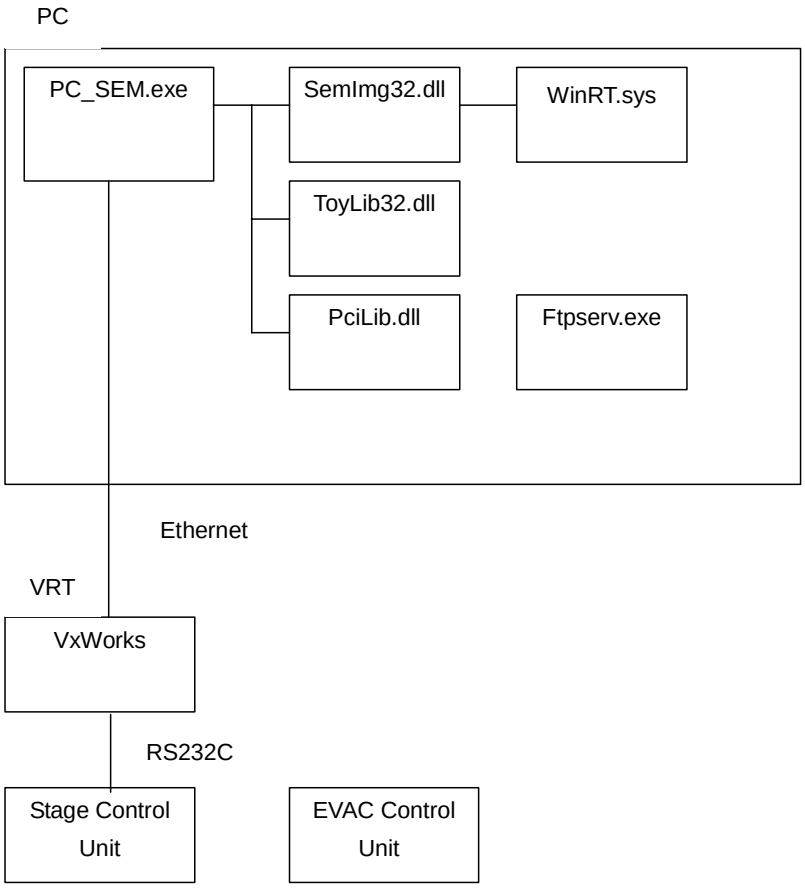

Figure 7-2: Software Configuration

PC Programs

PC_SEM.exe:	PC operation program
SemImg32.dll:	Imposer control program
WinRT.sys:	Imposer control driver
ToyLib32.dll:	PC memory status confirmation program
PciLib.dll:	PCI program interface
FtpServ.exe:	For downloading programs on the VRT side, and an FTP transfer program on the PC side for uploading images
Ras.exe:	Self-test program
SetLPAdr.exe:	Program that sets IP addresses used on the system
Other dll, ocx files:	Programs for quick image processing, image DB operations, and external communications by RS232C

VRT Programs

vxWorks:	SEM control program
vxWorks.sym:	Symbolic file for SEM control programs
vxWorks.mapA:	Map file for SEM control programs
vxWorks.mapL:	Map file for SEM control programs

Stage control, vacuum pump system programs

ROM for the stage control unit and the vacuum pump

7.3 File Organization

The S5200 program files and the directory structure of the files to be created or used are shown below.

Program Files

The following files exist in the directory c:\Program Files\PC_SEM\. This directory holds programs that pertain to PC operations. For a description of these files, refer to **Section 7.2**.

- PC_SEM.exe
- PC_SEM.hlp
- PC_SEM.cnt
- Ras.exe
- SetlpAdr.exe

The following principal files exist in the directory c:\Winnt\systems32\, which holds shared programs on the PC. For a description of these files, refer to **Section 7.2**.

- Semlmg32.dll
- ToyLib.dll
- PciLib.dll
- Other dll, ocx files

The following file exists in the directory c:\Winnt\Systems32\drivers:

- WinRt.sys

The following files exist in the directory C:\Vrtsys. This directory holds VRT control programs. When the system is started, the files indicated by ∗ are downloaded onto the VRT. For a description of these files, refer to **Section 7.2**.

- vxWorks∗
- vxWorks.sym∗
- vxWorks.mapA∗
- vxWorks.mapL∗
- Ftpserv.exe
- Ctr.bmp

Files that are Used

The following files, stored in the directory c:\Program Files\PC_SEM, are either created or used by S5200 programs:

- PC_SEM.mdb: Image DB file
- RasCodeJ.mdb (RasCodeE.mdb): Used in a self-test program
- EOAdjust.ini: Electro-optical system adjustment screen file
- MesParam.ini: Measurement parameter file
- MesCalib.mdb: Measurement calibration file
- Stage.ini: Stage registration coordinates file
- ImpAdj.ini: Imposer adjustment file

The following file is stored in the directory *c:\Vrtsys*:

- alignment_mem.dat

Files that are Created

The following files are user-generated during the operation of the S5200:

- Observation parameters are loaded from and defined in the files with an extension *pm1* or *pm2*. The extension *pm1* denotes a file that is created during High Mag. The extension *pm2* denotes a file that is created during Low Mag. These files are saved in the directory c:\Program Files\PC_SEM, where program files are stored.

  The following window allows you to load observation conditions and set the requisite parameters. Conditions can be loaded and saved using the Load/Set and Save buttons on the screen.

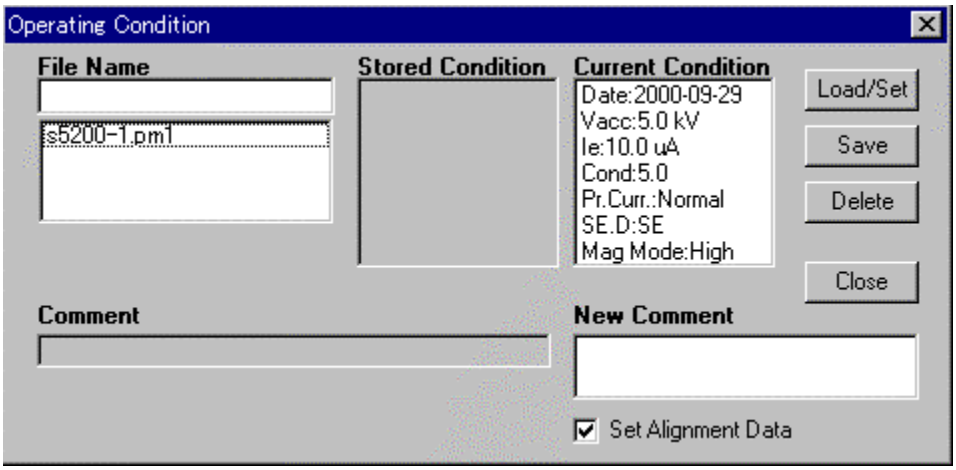

Figure 7-3

- Files with the extensions *bmp, jpg,* and *tif* are image files with the active formats. SEM can handle these three types of image formats. The files are stored in an operator-specified directory.

  The following window allows you to save image files. Images are saved by depressing the Save button.

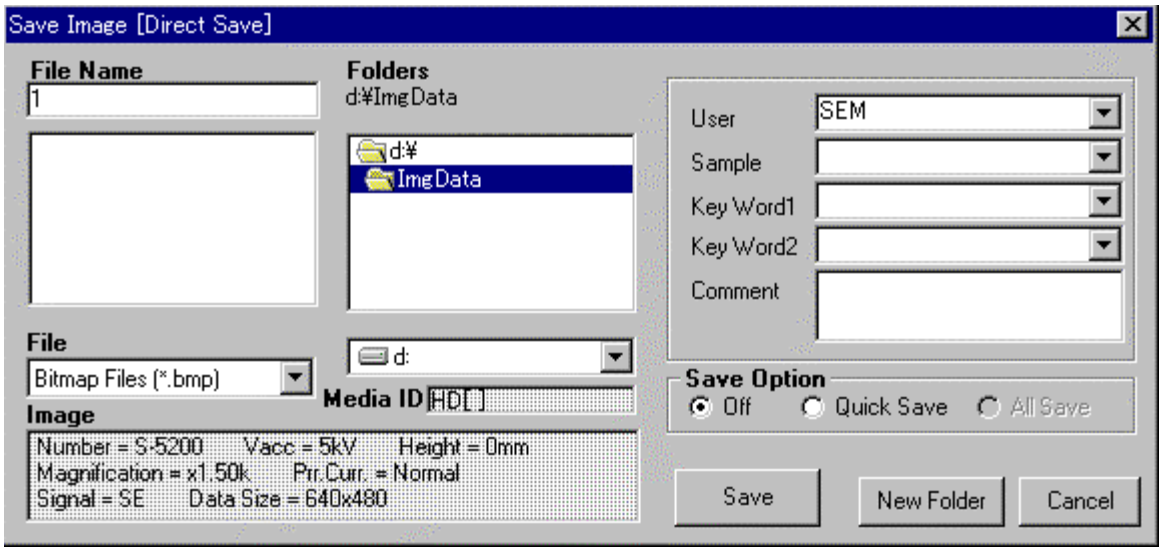

Figure 7-4

- Files with the *txt* extension are used to save observation conditions when the above image file, stored by the operator, is saved. A *txt* file is created when the associated file format is either *bmp* or *jpg*; it is saved in the same directory as the image file.

Log File

Listed below are communication log files that are used between a PC operating program and a VRT control program. You can specify either to create or not to create these files by setting the *Debug* option on the [Tool]-[System Adjust] menu.

- Socket.log
- RS.log

Condition Parameters

The S5200 stores observation parameters in a registry under the following key:

\HKEY_LOCAL_MACHINE\SOFTWARE\$-5200

In addition, you can specify a temporary file directory in the *Thumbnail Directory* under the [SEM Data Manager] tab on the [Option]-[Environment Setting] menu.

7.4 Windows and Programs

Starting and Terminating the System

The first step in starting your system is to turn on the power for the Display. (The power for the EO, which is normally switched on, is interlocked with that for the Display.) When the PC is booted and Windows starts up, you need to log in. You can start the system program by clicking on the following icon:

Figure 7-5

The figure below shows the initialization screen that appears when the operation program is started. To enter a service engineer screen, you need to enter a user ID and a password specifically assigned for service engineer on this screen.

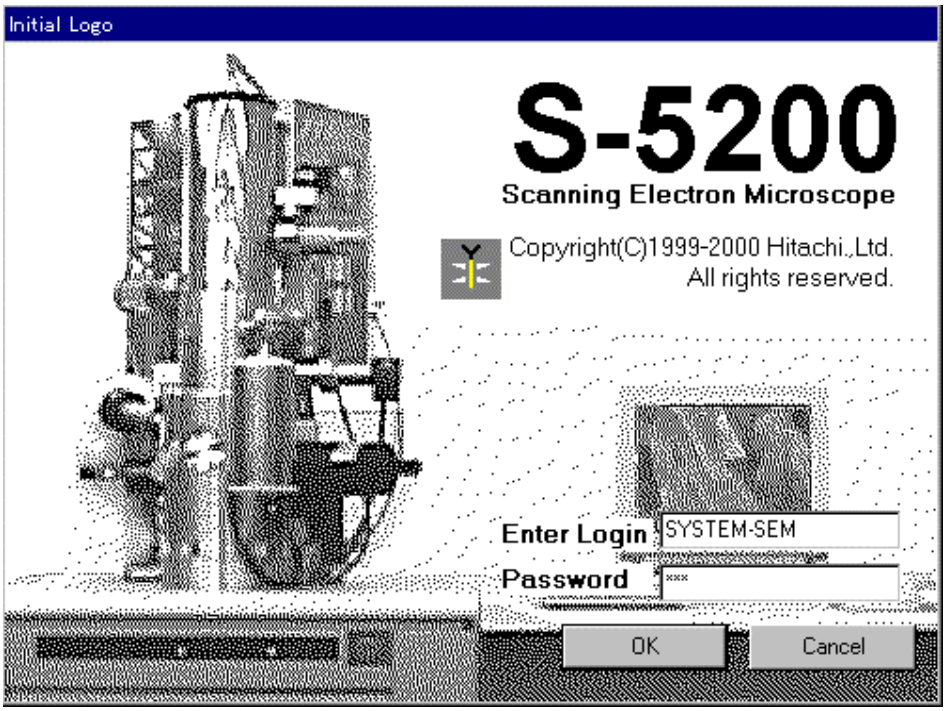

Figure 7-6

To terminate the operation program, select [File]-[Exit] on the menu.
When the following message is displayed, select [OK] to terminate the program:

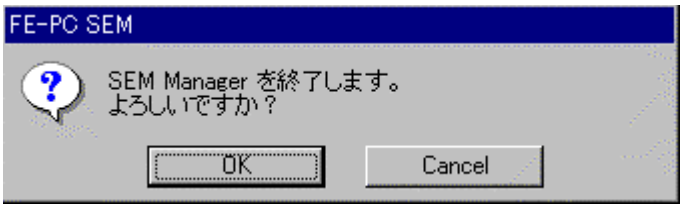

Figure 7-7

Operation Screen

The figure below shows the operation screen, from which you can launch various setting screens for the operation of the SEM and display an accelerating voltage and other high-voltage status information. You can operate the S5200 principally from this screen and the Scanning Image Window screen that displays Standard/Dual/Full images.

Of the Title, Menu, and Toolbar options on this screen, you can toggle the Toolbar between the show/hide modes. You can also customize the buttons on the Toolbar that is displayed on the screen launched from [Tool]-[Toolbar Settings] on the menu.

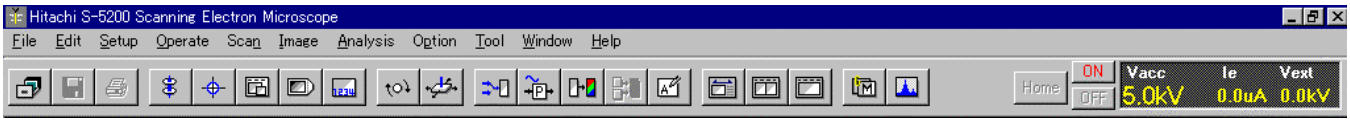

Figure 7-8 (a)

The following menu [Tool] is displayed for the service engineer's login. Service engineer mainly performs the processing from this menu.

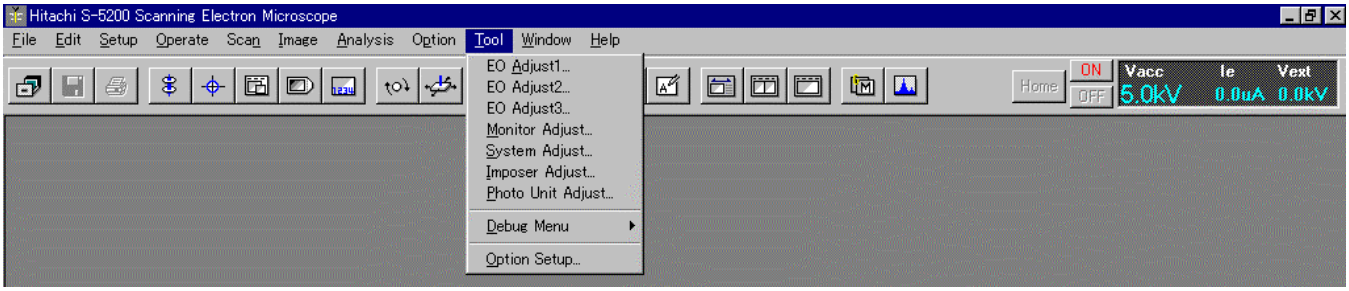

Figure 7-8 (b)

The figure below shows the Standard Screen Mode screen that allows you to observe images.

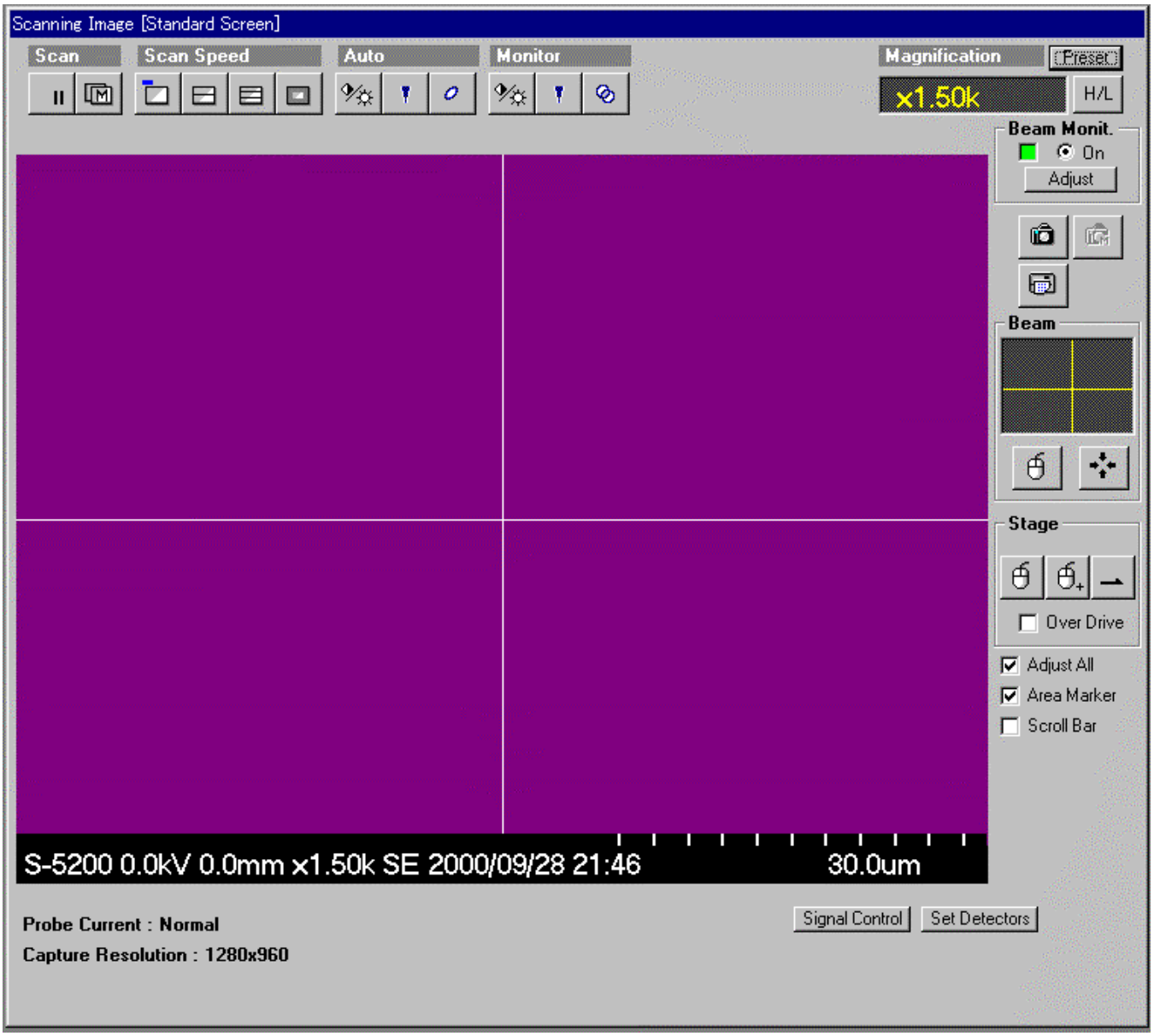

Figure 7-9

You can adjust the magnification, focus, and brightness on this screen. In addition, you can observe images by adjusting the accelerating voltage and the image alignment.

Electron Optics System Adjustment Screen

The figure below shows an adjustment screen for the electron optics system. This screen is launched from [Tool]-[EO Adjust …] on the menu. Further details on adjustments may be found in the section on adjustments.

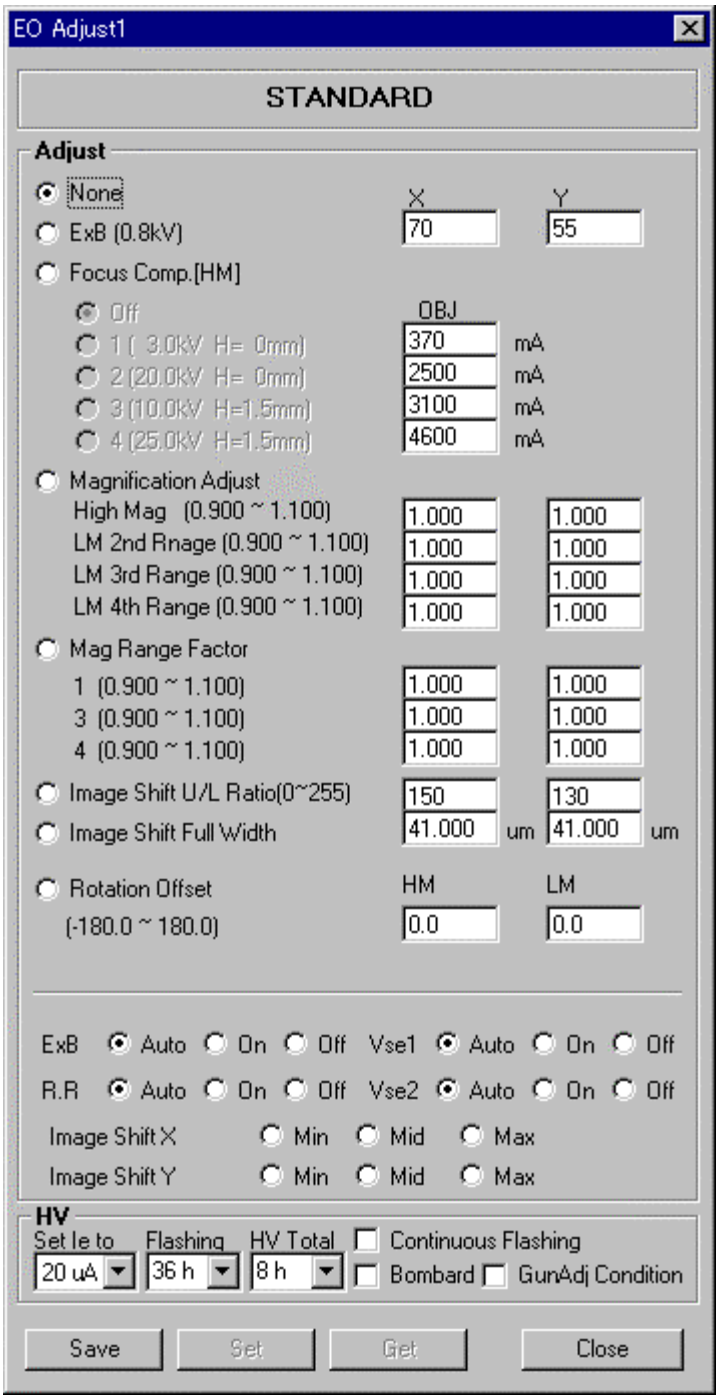

Figure 7-10 (a)

The following adjustment screen can be launched from [Tool]-[EO Adjust 2 …] on the menu.

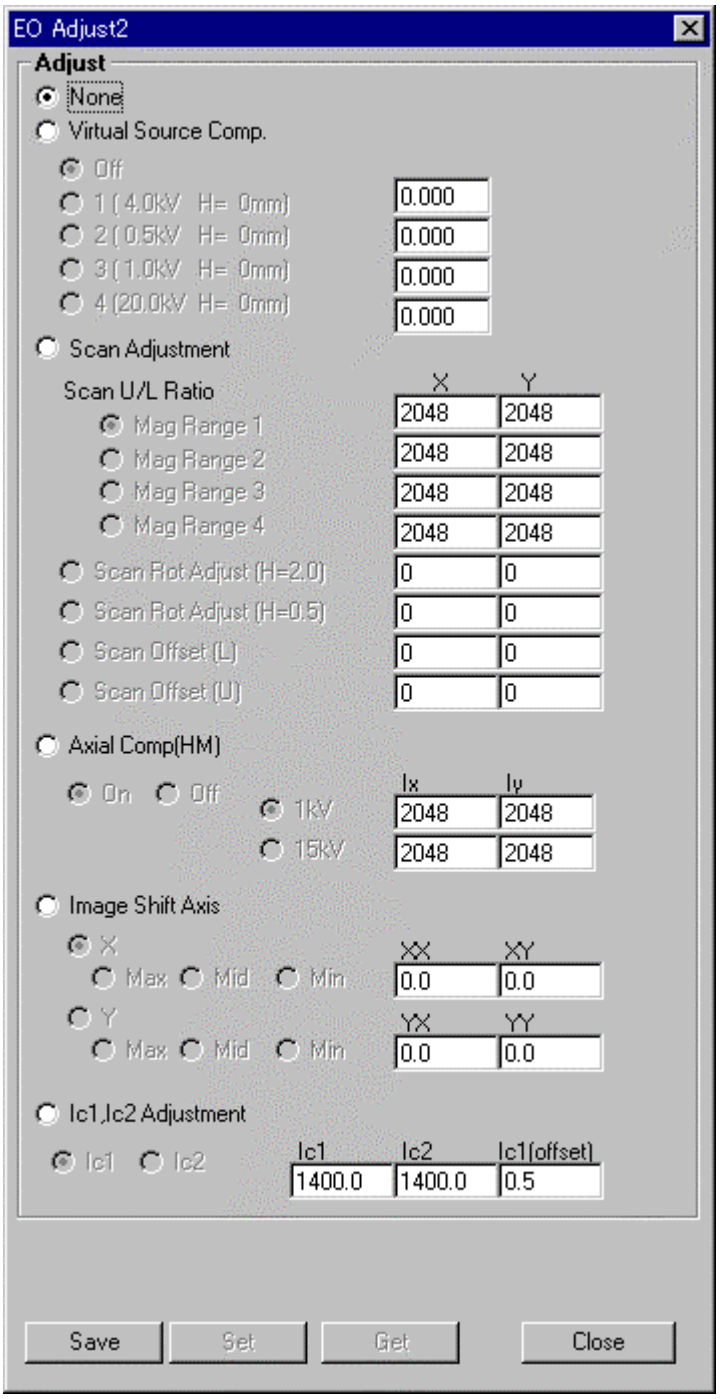

Figure 7-10 (b)

The following adjustment screen can be launched from [Tool]-[EO Adjust 3 …] on the menu.

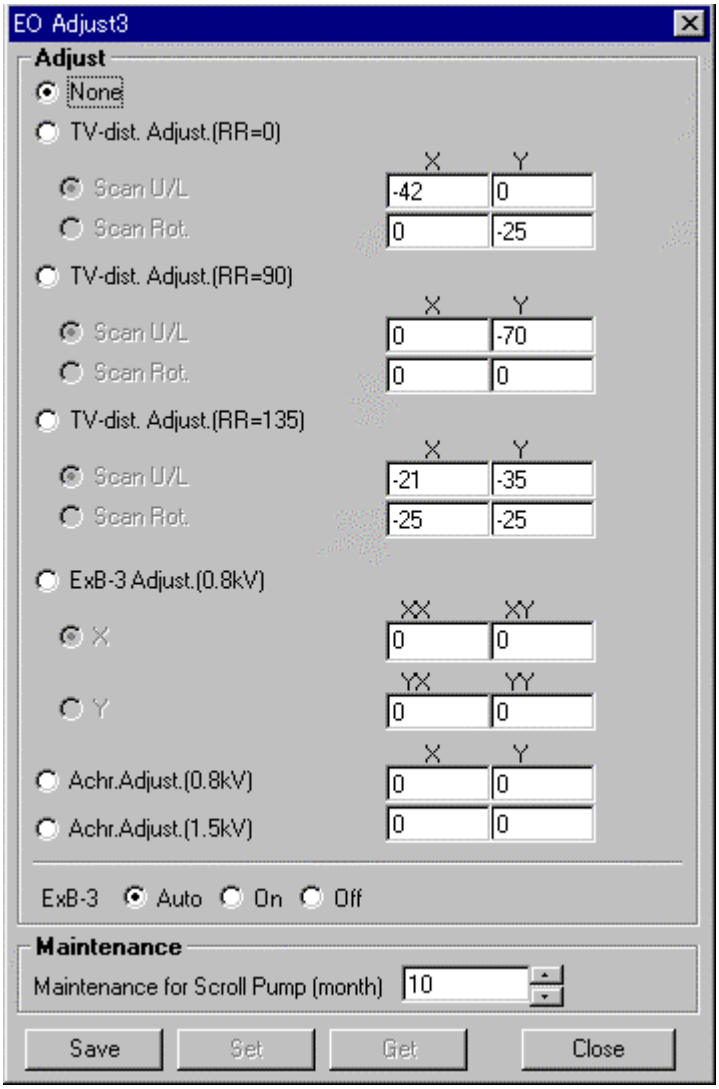

Figure 7-10 (c)

Stage Adjustment Screen

The figure below shows an adjustment screen that allows you to correct the flow of stage motion quantity and to improve the precision of stage stopping when moving the coordinates of the stage using the RISM option:

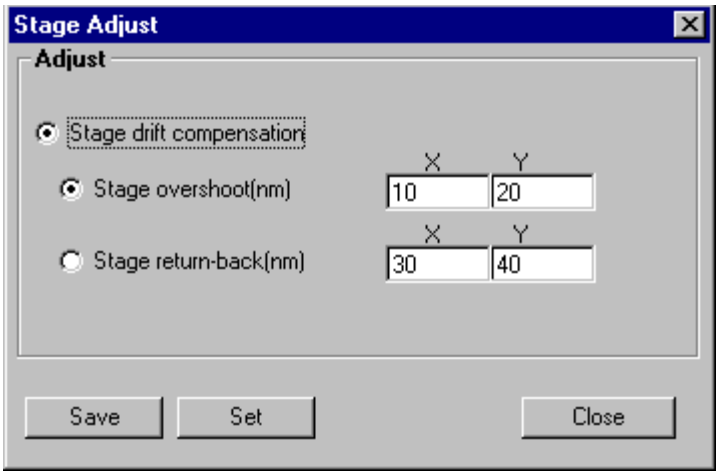

Figure 7-11

To enable the setting of the above corrections, you need to enable the settings on the following screen:

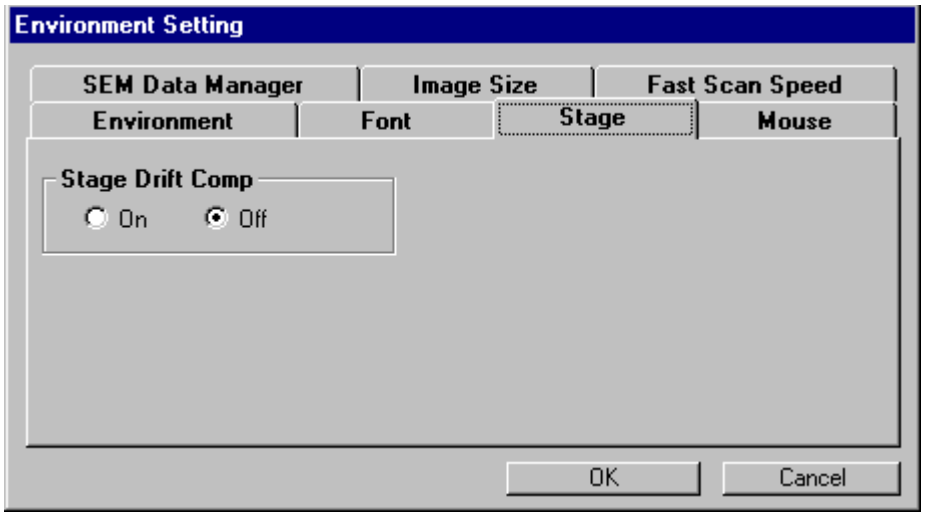

Figure 7-12

Imposer Adjustment Screen

The figure below shows an Imposer adjustment screen that displays SEM images. This screen is launched from [Tool]-[Imposer Adjustment] on the menu. Further details on adjustments may be found in the section on adjustments.

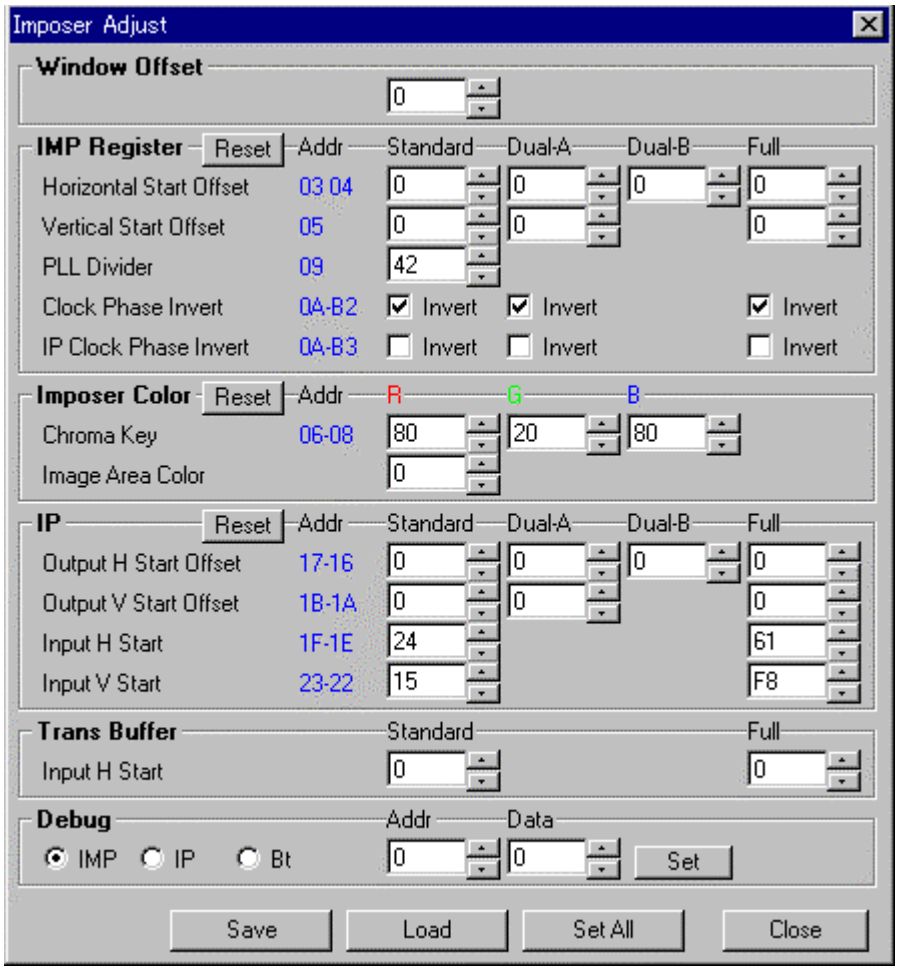

Figure 7-13

Maintenance Screen

The S5200 requires regular maintenance of the pump. The figure below shows the screen on which scheduled maintenance can be set for operator notification. This screen can be started from [Option]-[Maintenance] of the menu. Maintenance intervals can be set in the *Maintenance* item of the electro-optical system adjustment screen (**Figure 7-9**).

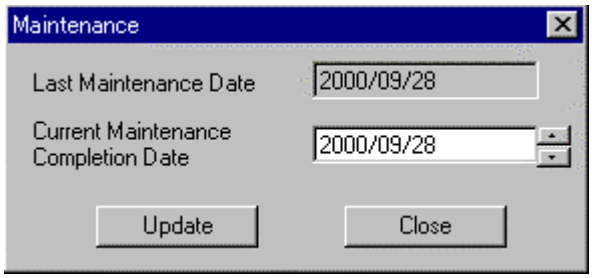

Figure 14 (a)

Figure 14 (b)

The specified schedule generates a message upon program start-up both one month before the scheduled date and when the scheduled date has elapsed.

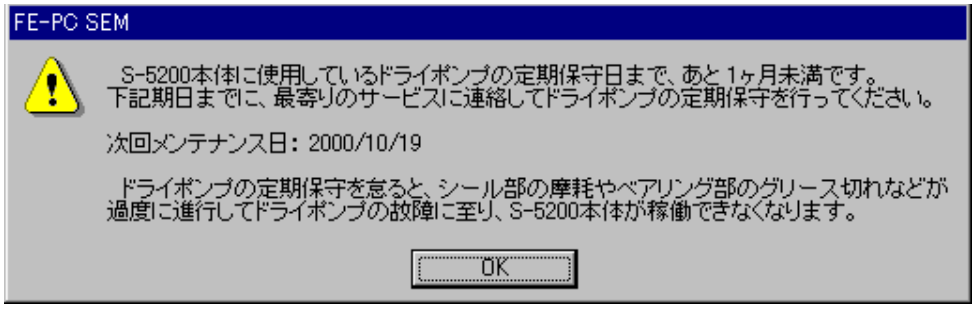

Figure 7-14 (c)

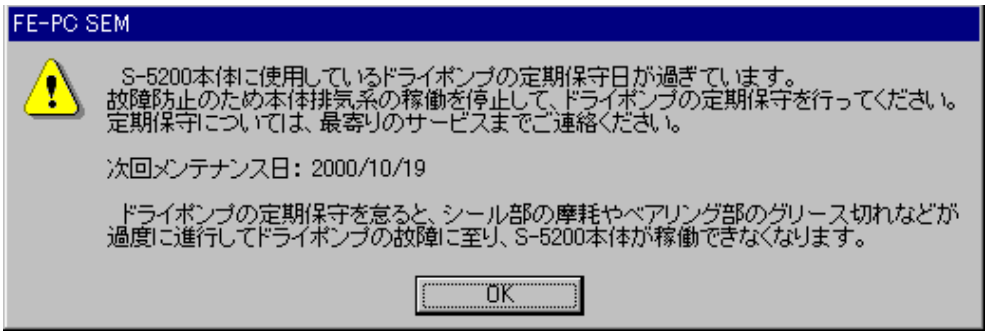

Figure 7-14 (d)

Options

The figure below shows a screen on which optional functions can be set. This screen can be started from [Tool]-[Option Setup] of the menu. Any option parameters set on this screen can be verified on the following version display screen:

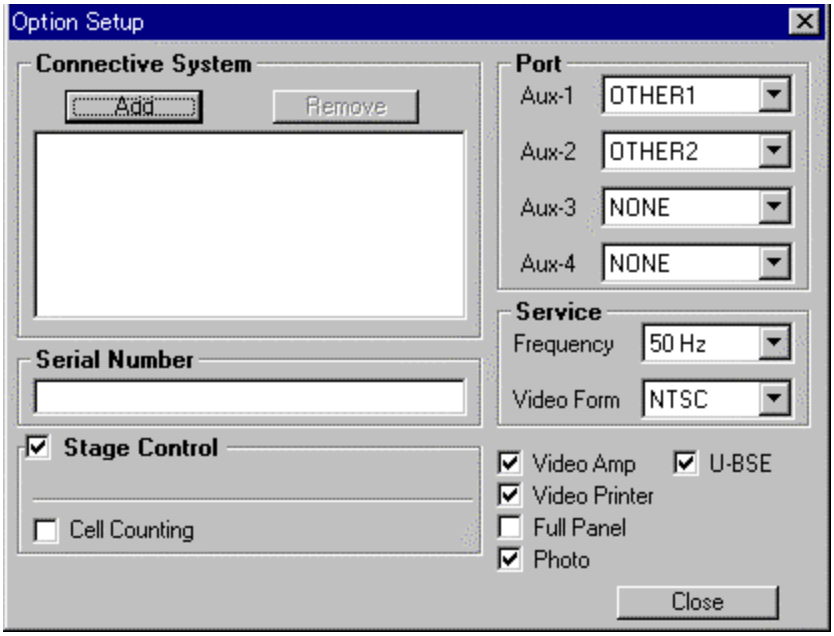

Figure 7-15

[Connective System Group]

[Add] button:	Adds an optional feature. Options are added by using a factory-supplied options disk.
[Remove] button:	Deletes optional functions that have been added. You can specify the option to be deleted by selected an item on the list of installed options.
Text box in the Serial Number group:	Enter the system production number, which is set when the system is shipped.
[Stage Control] checkbox:	Sets a stage option.
[Cell Counting] checkbox:	Sets the Cell Count option for the stage.

[Port Group]

[Aux-1] combo box:	Sets the type of auxiliary port detector.
[Aux-2] combo box:	Sets the type of auxiliary port detector.
[Aux-3] combo box:	Sets the type of auxiliary port detector.
[Aux-4] combo box:	Sets the type of auxiliary port detector.

[Service Group]

[Frequency] combo box:	Sets the signal frequency.
[Video Form] combo box:	Sets the image signal type (NTSC/PAL).
[Video Amp] checkbox:	Sets a video amp option.
[Video Printer] checkbox:	Sets a video printer option.
[Full Panel] checkbox:	Sets an operator panel option.

[Photo] checkbox:	Sets a photograph option.
[U-BSE] checkbox:	Sets a variable SE-BSE Mix ratio option.
[Close]:	Closes the Option Setup screen.

NOTE 1: The addition of a Connective System option requires a factory-supplied option disk. Option disks whose serial number does not match the serial number of the system will be rejected.

NOTE 2: Depending on whether the Video Form is NTSC or PAL, settings on the Imposer Adjust screen or Dip Switch settings may be required. Refer to the section on adjustments for details.

NOTE 3: Some options require the re-booting of the system. It is good practice to re-boot the system whenever a new option is set.

The Option Setup screen can be used only in the Standard Screen Mode.

Version Display

The figure below shows a screen that displays program version information and option settings.

Figure 7-16

This screen displays Hitachi's logo and copyright.

[Version Group]

Serial Number:	Displays the Serial Number that is specified on the Option Setup screen.
Operation Part:	Displays the version information on the PC operation program.
Control Part:	Displays the version information on the VRT operation program
Options list box:	Displays option information that is set on the Option Setup screen.

NOTE: During normal login, version information is displayed in two digits, e.g., 1.0; for service engineer login, it is displayed in three digits, e.g., 1.0.1.

Self Test

The figure below shows the main screen for the self-test program. This screen displays settings windows for various self-test modes. This program is stored in the directory *c:\Program Files\PC_SEM*.

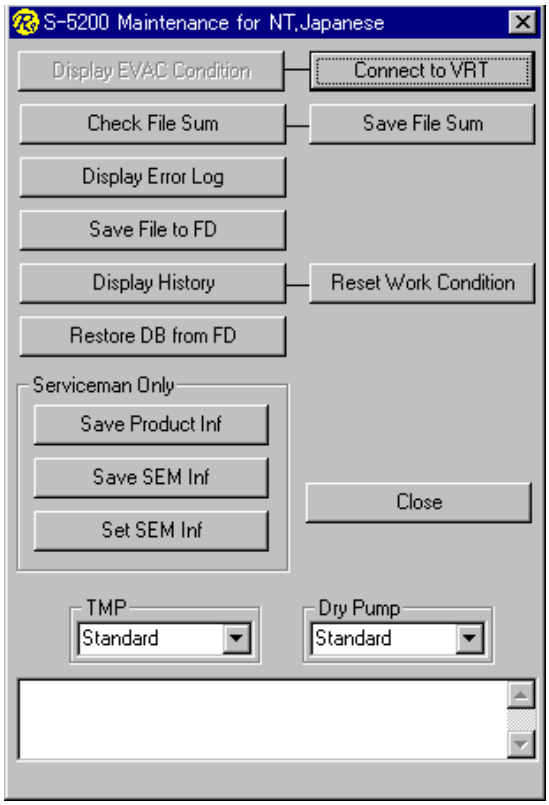

Figure 7-17

The buttons on this screen have the following functions:

(1) [Connect to VRT] button

This button connects the system to a command send/receive port (VRT) for the loading of data necessary for the display of the system's operating status.

(2) [Display EVAC Condition] button

This button graphically displays the operating status of the system on the screen. When the system is started, this button is cascaded (faint color: disabled). To use this button, Step (1) above should be performed.

(3) [Save File Sum] button

Determines the SUM value of the file necessary for SEM functions, and creates and displays the file (SUM table file). To re-do the file creation process, you need to enter the password.

(4) [Check File Sum] button

Displays on the screen a comparison of the current file status (SUM value) and the SUM value from Step (3).

(5) [Display Error Log] button

Errors and output messages that are generated during the start-up of the SEM are recorded in a database file (Ras.mdb). This screen displays the contents and meanings of such messages.

(6) [Save Log to FD] button

Selects and copies the following three files to a floppy disk: the database file (Ras.mdb) created by the SEM function; the file (Ras_EvacCondition.txt) that is created when the “Save” button on the [Display EVAC Condition] screen is pressed; and the debugger file (socket.log) created by the SEM.exe file.

(7) [Reset WorkCondition] button

This button resets the table “WorkCondition” (a table of chips used in the SEM and cumulative hours for oil, battery, and other items that need to be replaced) in the database file “Ras.mdb”. Pressing this button causes the cumulative data to be zero-cleared and any replacement date to be changed to the current system date and time.

(8) [Display History] button

This button displays on the screen the contents of the operating status table that is created and revised based on the Etc table (containing SEM starting/ending times, HV on/off times, and so forth) in the database file “Ras.mdb”. This button also displays graphs of the vacuum state created by the SEM function, emission current values, alignment information, files that are created by pressing the “Save” button on the [Display EVAC Condition] screen in Step (2) above, any vacuum data in the socket.log file, and emission data.

(9) [Restore DB from FD] button

This button either replaces the database file (Ras.mdb) on a floppy disk with the same file on the hard disk or creates (adds) both files. Execution of this function requires a database file on the floppy disk. This function can be used if the database file is lost or damaged for some reason (e.g., a PC breakdown). In order to use this function, you need to periodically back up the Ras.mdb file to a floppy disk, using the function described in Step (8) above.

(10) [Save Product Inf] button

This button creates a file (Ras_Insp.txt) that reflects the factory default settings for the system. The file can be copied to a floppy disk.

(11) [Save SEM Inf] button

This button creates a backup file for the information contained in the registry [HKEY_LOCAL_MACHINE\SOFTWARE\S5200].

(12) [Set SEM Inf] button

This button creates a SemSetng.REG file from the file created in Step (11) above. Double-clicking on this file causes the registry to be overwritten by the contents stored in the file.

[TMP]

This button, which is used in Steps (2) and (10) above, provides TMP settings for the system.

[Dry Pump]

This button, which is used in Step (10) above, provides Dry Pump settings for the system.

Text box

Displays the processing status and fault-indicating messages.

[Close] button

This button closes the Ras function.

7.5 Installation Procedures and Setting Your PC

Installing an application program

Preliminaries

- Close PC-SEM. Shut down any other programs that are currently running.
- Launch [Region] from the Control Panel. Make sure that the [Region] specification indicates the Japanese language.

Installation

Load the S-5200 installation CD-ROM on the CD-ROM drive. On the Taskbar, select [Start] and [Run …]. Type "E:\Setup.exe" and click on the [OK] button.

Figure 7-18 (a)

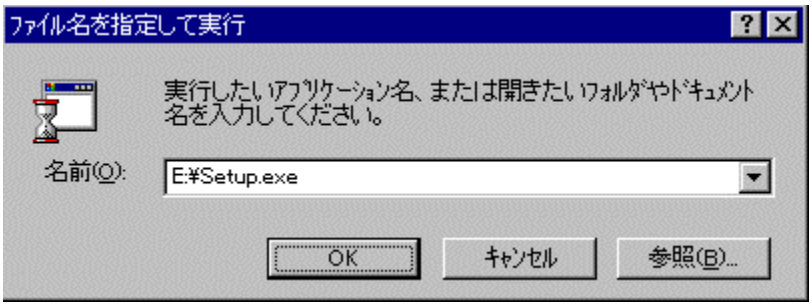

Figure 7-18 (b)

If the drive letter for your CD-ROM drive is other than "E:", specify that drive letter.

After the Installer has checked the available disk space, the following screen appears:

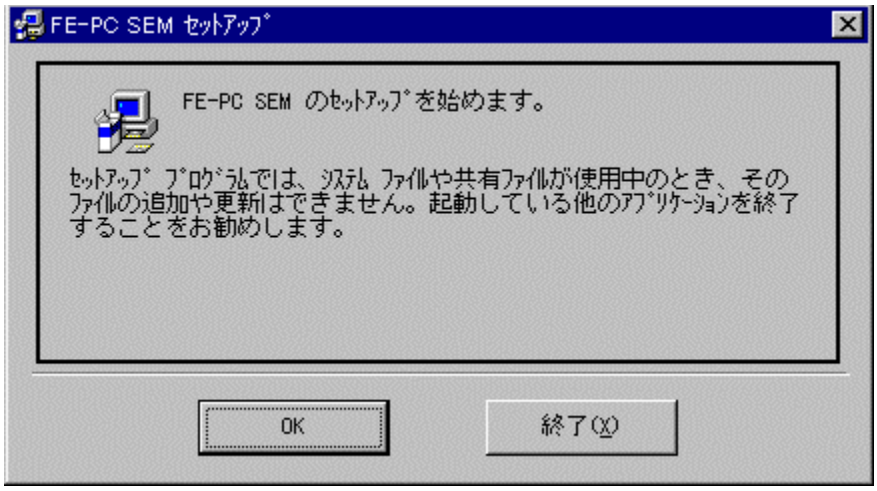

Figure 7-19

Click on the [OK] button to commence the installation process. When a confirmation message appears upon completion of the installation process, click on the [OK] button to close the installation program.

Upon completion of the installation process, shut down the PC and turn off the power for it. After that, turn on the power again and start up the PC.

Refer to the installation manual for further information, including required PC settings.

The installation CD has the following directory structure:

```
E:\Setup.exe
   Common\
   Newlmp\
   English\
   Japanese\
```

When the system is started for the first time, the following batch programs, stored in the directories *Common* and *NewImp*, should be run. This process is required only for a new installation; it is not needed in subsequent upgrades.

```
Common\
  ├─Install.bat
  └─NewInsNt.bat

NewImp\
  └─NewImp.bat
```

7.6 Error Messages

Host

Error Code	Message	Cause & Remedy
1001 to 1008	Cannot execute at scan speed xxxx	These messages will be shown when the operation is inhibited with the present scanning speed. Change scanning speed and then, do the operation again.
1009 to 1030	Now running in xxxx Mode Executing xxxx xxxx ing	These messages will be shown when the operation is inhibited with the present scanning mode or the present executing function. Change scanning mode or wait until the present executing function ends. Then, do the operation again.
2000	Invalid input data	This message will be shown when input data is not correct. Confirm acceptable data and then, input again.
2001	Invalid data (out of range)	This message will be shown when input data is too large or too small. Confirm acceptable range of data and then, input again.
2002	Only a number is acceptable	This message will be shown when you input keys other than numerals.
2003	Invalid Data	This message will be shown when input data is not correct. Confirm acceptable data and then, input again.
2004	The name is used in the system.	S-5200 uses this login name. Use other name.
2005	Specified value is invalid. Set the value so as to satisfy the following equation. [MeasurementPoint-1] × [MultiPitch] + [MeasurementPitch] × [SummingLine] <= 480	[CD Measurement option] Combination of parameters results in number of measurement lines. Change parameters following the equation shown in the message.
2007	Invalid login name	Use a login name already registered. “S-5200” is the default login name. Note that capital and small letters are distinguished for login names. Confirm your input.
2008	The password you typed is incorrect.	You entered incorrect password. Note that capital and small letters are distinguished for login names. Confirm your input.
2010	Specified file is different from the condition file for S-5200. SEM Parameters will be initialized.	The file for operation condition is not correct. If this message is shown, check if other application is using files of extension “pm1” or “pm2”.
2016	Specified file not moved because source and destination directories are the same.	This message will be shown when you have specified the same directory as of the source files for the target directory in Batch Process-Move File command. Specify other directory than that of source files for the target directory.
2017	xxxx is already Exist.	This message will be shown when the input User name (or login name) is already used. Specify other name.

Error Code	Message	Cause & Remedy
2031	Use at Magnification lower than × 5,000.	This message will be shown when you click the Get Image button at a higher magnification than ×5,000.
2032	Time-out error.	This message will be shown when operations such as auto focusing did not end within specified period. If it happens frequently, contact a service engineer.
2040	This is not 8 bits image file.	Some commands in the SEM Data Manager handle 8 bit gray scale images only.
2041	The size of image exceeds the maximum resolution 2560 × 1920.	Some commands in the SEM Data Manager handle maximum of 2560 × 1920 pixels.
2042	Image size is not available except 640 × 480, 1280 × 960, 2560 × 1920	Image transfer to Scanning Image window and photo replay support the three image sizes shown in the message only.
2045 to 2047	Captured images in memory areas of xxxx will be deleted. Are you sure?	Image transfer to Scanning Image window and photo replay use image memory for storing captured image. This message is shown when the necessary area is not empty. If you need the captured images in specified areas, click No button and save these images. And then, use the image transfer or photo replay command.
2060	Insufficient memory space in a temporary drive. At least 20 MB free area is necessary for startup.	This message will be shown when vacant area of the hard disk is not enough for the process to be executed. Delete unnecessary files and keep more space than specified.
2061	Insufficient memory space in a temporary drive. At least 5 MB free area is necessary for executing this process.	This message will be shown when vacant area of the hard disk is not enough for the process to be executed. Delete unnecessary files and keep more space than specified.
2062	Insufficient memory space in a temporary drive. At least 10 MB free area is necessary for executing this process.	This message will be shown when vacant area of the hard disk is not enough for the process to be executed. Delete unnecessary files and keep more space than specified.
2065	Free space in temporary drive is 30 MB or less. System may become unstable. Please quit S-5200 program and free up the disk space.	This message will be shown when vacant area of the hard disk is not enough for the process to be executed. Delete unnecessary files and keep more space than specified.
2101	Please input file name.	Input a file name and then, click the Save Button.
2102	Please input user name	Input or select a user name and then, click the Save button.
2105	Auto increment counter has reached 99. Please use another file name	Quick saving allows up to 99 files for a name. Use another file name.
2107	Please input comment.	[CD Measurement option-Calibration] Input a comment before clicking the Apply button.
2108	File name is duplicated.	This message will be shown when you have specified a file name already used. Use other name.
2109	File name is too long..	Up to 255 characters are acceptable for a file name including drive name, folder name, and extension.

Error Code	Message	Cause & Remedy
2110	User table is not empty. Delete all lists or images by using Remove List Command or Delete Image Command before deleting User table.	To delete a user name, image lists in the user table shall be empty. Use Batch Process-Remove List command (removes database list only) or Delete Image command (deletes images).
2120	A number of written items exceed the maximum. Carry out Combine.	Number of texts or graphics exceeds allowable number. Delete some of texts or graphics to add new one. Or once execute combine command and save the image to add new data in the image.
2121	The number of written items exceeds the maximum. More items cannot be input.	Number of texts or graphics exceeds allowable number. Delete some of texts or graphics to add new one.
2130	Number of tool buttons is out of range. Please delete less important buttons.	Not all buttons are able to be placed in the toolbar. Select buttons you will use frequently.
2140	Invalid file name.	The file name possibly includes characters not allowed (/ : , ; * ? “ < > |).
2141	File name is too long. Up to 255 characters are acceptable for a file name including folder name.	Use file name shorter than 255 characters including folder name and extension.
2142	Invalid User name.	The User name possibly includes characters not allowed (/ : , ; * ? “ < > |).
2143	User name is too long. Up to 64 characters are acceptable.	Use User name shorter than 64 characters.
2144	Invalid Sample name.	The Sample name possibly includes characters not allowed (/ : , ; * ? “ < > |).
2145	Sample name is too long. Up to 40 characters are acceptable.	Use Sample name shorter than 40 characters.
2146	Invalid Keyword.	The Keyword possibly includes characters not allowed (/ : , ; * ? “ < > |).
2147	Keyword is too long. Up to 20 characters are acceptable.	Use Keyword shorter than 20 characters.
2149	Comment is too long. Up to 80 characters are acceptable.	Use Comment shorter than 80 characters.
2200	The new and confirmed passwords do not match. Please type them again.	Input both new and confirmation passwords again. Note that capital and small letters are distinguished.
2202	Cannot delete this login name.	This login name is not allowed to delete.
3001	Written data will be combined into image. OK?	This message will be shown for confirmation.
3002	Written data will be transferred into bitmap area for photograph. OK?	This message will be shown for confirmation.
3003	Caution! All captured images will be deleted. Are you sure?	This message will be shown when All Clear button in the captured Image window is clicked or when you change capture resolution for confirmation.

Error Code	Message	Cause & Remedy
3004	Exit SEM Manager. OK?	This message will be shown for confirmation.
3010	XXXX already Exist. Overwrite?	This message will be shown when the file name for saving already exists. If you click the OK button, the file will be overwritten.
3011	XXXX will be deleted. Are you sure?	This message will be shown for confirmation. Click Cancel button if you do not want to delete it.
3013	XXXX will be deleted (moved former files). Are you sure?	This message will be shown for confirmation if the original file may be deleted after moving it.
3015	~ already Exist. Overwrite? (Yes: Overwrite, No: Save by using different name.)	This message will be shown when saving the image on the SEM Data Manager. Click Yes to overwrite. When you click the No button, the Save Image dialog window will be shown for saving the image with new file name.
3016	~ already Exist. Overwrite? (Yes: Overwrite, No: Append into the existing file.)	This message will be shown when the specified file name for saving measured data already exists. If you click the Yes button, the existing data in the file will be overwritten by new one. If you click the No button, the existing data in the file will be kept and new data is added following the existing data.
3021	Caution! After deleting data, it cannot be accessed by any other user table it is registered in. Are you sure?	When images are registered in multiple user names, deleting, moving or renaming the images on a user may cause troubles when opening the images on other user names. When this happens, removing the images using Batch Process-Remove List command from the users will solve the troubles.
3022	Caution! After moving data, it cannot be accessed by any other user table it is registered in. Are you sure?	When images are registered in multiple user names, deleting, moving or renaming the images on a user may cause troubles when opening the images on other user names. When this happens, removing the images using Batch Process-Remove List command from the users will solve the troubles.
3023	Caution! After renaming data, it cannot be accessed by any other user table it is registered in. Are you sure?	When images are registered in multiple user names, deleting, moving or renaming the images on a user may cause troubles when opening the images on other user names. When this happens, removing the images using Batch Process-Remove List command from the users will solve the troubles.
3030	Print both A and B images?	This message will be shown when Printing images in Dual Screen mode. When you click the No button, the image on the screen specified by the Record A/B buttons will be printed.
3040	HV will be turned off. OK?	This message will be shown when closing the program while HV is still ON. If you click the OK button, HV will be shut Off.

Error Code	Message	Cause & Remedy
3100	Would you save measurement data?	This message will be shown when closing the CD Measurement without saving measured data. Click Yes and save data if it is necessary.
3200	Please insert additional option disk.	Insert the option disk following the message.
3201	Delete this option. Are you sure?	This message will be shown for confirmation.
3210	The password has been successfully changed.	This message shows that the password has been changed.
3220	Preset count has been passed.	Number of cell counting was over.
3502	Current Holder Type and Sample Height Mode are set to the above conditions. Please change the condition with the corresponding dialog Window if the above setting are different from the actual ones. [Caution] The sample holder may touch the objective lens if an incorrect Holder Type is selected. Holder Type:	This message will be shown when applying HV. Check if the current Specimen Holder Type and Sample Height Mode in the message are correct.
3503 3506 3508	The combination of the present accelerating voltage and Sample Height Mode which has been selected is not allowed. Change the settings so that the following relation is satisfied	Change the setting of Sample Height mode or accelerating voltage.
3600	It is necessary to carry out the maintenance of the scroll pump used with the S-5200 within 1 month. Please contact to the nearest service organization and carry out the maintenance by the following date.	Carry out the maintenance of the scroll pump.
3601	The time has exceeded the date when the maintenance of the scroll pump is required. Please shutdown the evacuation system of the S-5200 and carry out the maintenance of the scroll pump. Please contact to the nearest service organization for the maintenance of the scroll pump	Shutdown the evacuation system and carry out the maintenance of the scroll pump.
3802	Overwrite captured image in memory area of No.~. Are you sure?	This message will be shown for confirmation when you select a capture area where image already exists, or when you capture an image when image exists in the next capture area.
3810	Delete Calibration No.~. Are you sure?	This message will be shown for confirmation when you delete a calibration data.

Error Code	Message	Cause & Remedy
3815	A date of the maintenance for the scroll pump will be update to the following date. Are you sure?	Check the date of the maintenance for the scroll pump, and click the OK button.
3901	The limit is ~ bytes.	You entered too long a login name or password.
4200	Option disk is invalid.	The option disk is not for this instrument. Use the correct disk.
4201	Serial number is invalid.	The serial number is incorrect. Or the option disk is not for this instrument.
4300	Failure in auto focus.	This message will be shown when auto focusing failed in focus detection. Check if the observed specimen has fine surface structure, the image brightness or contrast is adequate, or the OBJ aperture is aligned correctly.
4301	Failure in auto stigma.	This message will be shown when auto stigma failed. Check if the observed specimen has fine surface structure, the image brightness or contrast is adequate, the OBJ aperture is aligned correctly or stigma alignment is adjusted correctly.
4500	Input value or measured value is not correct.	This message will be shown when ratio of correct value and measured value in the calibration operation is out of range.
4501	Magnification is out of step range. Please adjust magnification.	Magnification is set in stepwise by magnification operation and also changed finely by focusing operation. Calibration of measured data is possible only when the step- set magnification value. When this message is shown, once make magnification operation using mouse on the magnification area or using the knob on the operation panel (option). And then, continue measurement operation.
4502	Please execute calibration.	This message will be shown when you click the Apply button before the Calibration Factors are calculated.
4700	Communication time out error between SEM and STAGE. Please check the wiring for RS-232C and re-start the system.	This message will be shown when the control of the motorized stage failed. Try once to restart the display unit and the stage controller.

Stage

Error Code	Message	Cause & Remedy
5000	X-axis parameter error (Max)	The axis position is at the limit. You can drive the stage towards reverse direction.
5001	X-axis parameter error (Min)	
5002	Y-axis parameter error (Max)	
5003	Y-axis parameter error (Min)	
5006	T-axis parameter error (Max)	The axis position is at the limit. You can drive the stage towards reverse direction.
5007	T-axis parameter error (Min)	If it happens frequently, contact a service engineer.
5020	Cannot execute while drive X-axis	Possibly the initialization is in progress. Wait for a few minutes.
5021	Cannot execute while drive Y-axis	If the message is shown even when about 10 minutes have passed, shut the stage power off once and then turn it on.
5023	Cannot execute while drive T-axis	
5025	Cannot execute while drive stage by track ball	This message will be shown when operation on the GUI and by the track ball are generated simultaneously.
5026	Cannot execute while drive stage by panel	This message will be shown when operation on the GUI and by the operation panel are generated simultaneously.
5040	Cannot execute while not initialize X axis	Initialization of the axis is in progress.
5041	Cannot execute while not initialize Y axis	Wait until initialization ends.
5043	Cannot execute while not initialize T axis	
5075	Stage over run error (X-CCW)	These messages will be shown when the axis is driven over its limit. It will be recovered automatically.
5080	Stage over run error (X-CW)	
5085	Stage over run error (Y-CCW)	
5090	Stage over run error (Y-CW)	
5101	Stage over run error (Z-CCW)	
5102	Stage over run error (Z-CW)	
5103	Stage over run error (T-CCW)	
5104	Stage over run error (T-CW)	
5200	Specimen exchange position error (X) (Allowable value : 10 μm)	This message will be shown when the stage can not be set at the home position correctly.
5201	Specimen exchange position error (Y) (Allowable value : 10 μm)	Restart the stage power switch. If this happens frequently, contact a service engineer.
5203	Specimen exchange position error (T) (Allowable value : 0.1 deg)	
5365	Time out error (X-axis)	This message will be shown when the operation does not end within specified time period.
5366	Time out error (Y-axis)	If the message is shown frequently, contact a service engineer.
5368	Time out error (T-axis)	

Error Code	Message	Cause & Remedy
5400	X-axis is out of range (MAX) Please check sample size with Stage Control Window	This message will be shown when the present position data is out of the movable area of the axis. If the message is shown frequently, contact a service engineer.
5401	X-axis is out of range (MIN) Please check sample size with Stage Control Window	
5402	Y-axis is out of range (MAX) Please check sample size with Stage Control Window	
5403	Y-axis is out of range (MIN) Please check sample size with Stage Control Window	
5406	T-axis is out of range (MAX)	
5407	T-axis is out of range (MIN)	
5982	Stage presently moving	Internal error message. Ignore it. Click OK.
6510	Host not found.	An error occurred while transferring files to or from a remote computer. Check corresponding setting.

HV, Evacuation System

Error Code	Message	Cause & Remedy
7012	HV forced OFF due to one of the following items. Cause : Degradation of vacuum. Safety protection activated. Setting the specimen holder at the entrance of the specimen exchange chamber.	This message will be shown when the HV is shut off by degradation of the vacuum, safety protection activated, or setting the specimen holder at the entrance of the specimen exchange chamber. First check if the specimen holder is in the specimen chamber. Next check the ion pump vacuum. If the ion pump vacuum is not good, wait until the vacuum of ion pumps recovers to the specified value (HV indication will start blinking in yellow). And then, turn the HV on. If this message is shown frequently, contact a service engineer.
7030	Emission current limit error	This message will be shown when HV is shut off by emission current limiter. Make flashing operation and then, turn HV on. If this message is shown frequently, contact a service engineer.
7100	Long time has past since last flash. Please execute flashing, or HV OFF.	This message will be shown when 24 hr have passed, or 8 hr of accumulative HV on time have passed since last flashing operation. Execute flashing within 30 min. If you do not flash within 30 min., HV will be shut off automatically.
7101	HV turned off due to excessive time since last flash. Please execute flash	This message will be shown when HV is shut off automatically. Execute flashing and then turn HV on.
7102	Long time has passed since last flash. Please execute flash.	This message will be shown when 24 hr have passed, or 8 hr of accumulative HV on time have passed since last flashing operation. Execute flashing and then turn HV on.
7200	Abnormal temperature rise occurred in the power supply. Shut down the PC and turn the [DISPLAY] switch off. Restart the microscope after about half	This message will be shown when temperature of high power electric circuitry exceeds specified value. Turn the EO control switch off. Wait for about 30 min. Then turn the switch on and start operation. If the message is shown frequently, contact a service engineer.

Error Code	Message	Cause & Remedy
	an hour. When this message is shown again, contact service engineer.	
7201	Detection of an error in the cooling function for the objective lens. If the column temperature around the objective lens is about 40 , shut down the PC and turn the [DISPLAY] switch off. Wait for more than 5 hours. When the temperature of objective lens returns the room temperature, turn the [DISPLAY] switch on, and check the cooling water flow and water temperature. Water flow:1 to 1.5 L/min Water temperature: 10 to 20	This message will be shown when temperature of the objective lens coil exceeds specified value or cooling water flow value is not enough. If the message is shown frequently, contact a service engineer.
7202	Temperature has recovered.	This message will be shown when the message code 7200 or 7201 has appeared and the temperature has recovered to normal value. You may continue operation. If message code 7200 or 7201 is shown frequently, contact a service engineer.
7203	Specified Height mode not allowed.	This message will be shown when specifying the Sample Height that exceeds allowed value at the present accelerating voltage. Use allowed Sample Height mode.
7204	Specified Accelerating voltage not allowed.	This message will be shown when specifying the accelerating voltage that exceeds allowed value at the present Sample Height. Use allowed accelerating voltage.
7777	Host and SEM Controller are not communicating. Confirm that power is on.	The S-5200 system uses a microprocessor for controlling the hardware. The microprocessor is linked with PC using Ethernet. The message [Host and SEM Controller are not communicating. Confirm that power is on] shows that there has been some failure on the initial connection of this Ethernet. If this message appears, click OK button on this message dialog and turn EO CONTROL switch off. Then, turn this switch on again and start S-5200 program. If the error message appears again and your SEM is using a motorized stage, check if the power switch of the stage controller is turned on.

This page intentionally left blank.

8 System Operation

8.1 System Operation Outline

The basic system operation for this system consists of SEM operations under a GUI environment and evacuation sequence operations. Under the GUI environment, you can operate the electron beam, the condenser lens, detected signals and the specimen stage, in addition to performing image processing on acquired images. In the evacuation sequence operations, you can perform evacuation operations using a turbo molecular pump and a dry pump, in addition to baking and Eco mode operations.

8.2 Flowchart on All Operations

You can perform S-5200 SEM operations according to the flowcharts shown below. For details, please see the individual sections in the Users Manual.

Preliminaries	• Checking the vacuum for the column unit	(3.1.1)
	• Launching DISPLAY	(3.1.2)
	• Supplying liquid nitrogen (option)	(3.1.3)
Loading a specimen	• Notes on preparing a specimen	(3.2.1)
	• Pre-processing of a specimen	(3.2.2)
	• Adjusting the specimen height	(3.2.3)
	• Setting and verifying a specimen exchange position	(3.2.4)
	• Specimen loading procedures	(3.2.5)
	• Specimen exchange procedures	(3.2.6)
Applying an accelerating	• Operating the S. C. AIR LOCK VALVE switch	(3.3.1)
	• Flushing	(3.3.2)
	• Setting an accelerating voltage and an emission current	(3.3.3)
	• Applying an accelerating voltage	(3.3.4)
Adjusting the electron	• Settings for the electron optics system	(3.4.1)
	• Electron optical axis alignment (electromagnetic alignment)	(3.4.2)
Observing the specimen	• Setting a magnification	(3.5.1)
	• Setting the scanning speed	(3.5.2)
	• Adjusting the image brightness and contrast	(3.5.3)
	• Adjusting the focus and correcting for non-point aberration (stigma)	(3.5.4)
	• Operating the stage	(3.5.5)
	• Beam blanking function	(3.5.6)
Recording the image	• Recording an image	(3.6.1)
	• Preparing the image to be recorded	(3.6.2)
	• Setting the capture conditions	(3.6.3)
	• Image capturing	(3.6.4)
	• Direct save	(3.6.5)
	• Saving a captured image	(3.6.6)
	• Shooting a photograph	(3.6.7)
SEM Data Manager	• Notes on using the SEM Data Manager	(3.7.1)
	• Registering an image with the SEM Data Manager	(3.7.2)
	• Operating the SEM Data Manager	(3.7.3)
Image processing	• Gradation conversion	(3.8.1)
	• Image processing	(3.8.2)
	• Saving a processed image	(3.8.3)
Shutdown operation	• Shutting an accelerating voltage	(3.9.1)
	• Moving a sample to a specimen exchange position and verifying the result	(3.9.2)
	• Display termination operation	(3.9.3)

8.2.1 Evacuation System Flowchart

Standard Configuration Flowchart

Starting Operation (Standard Piping)

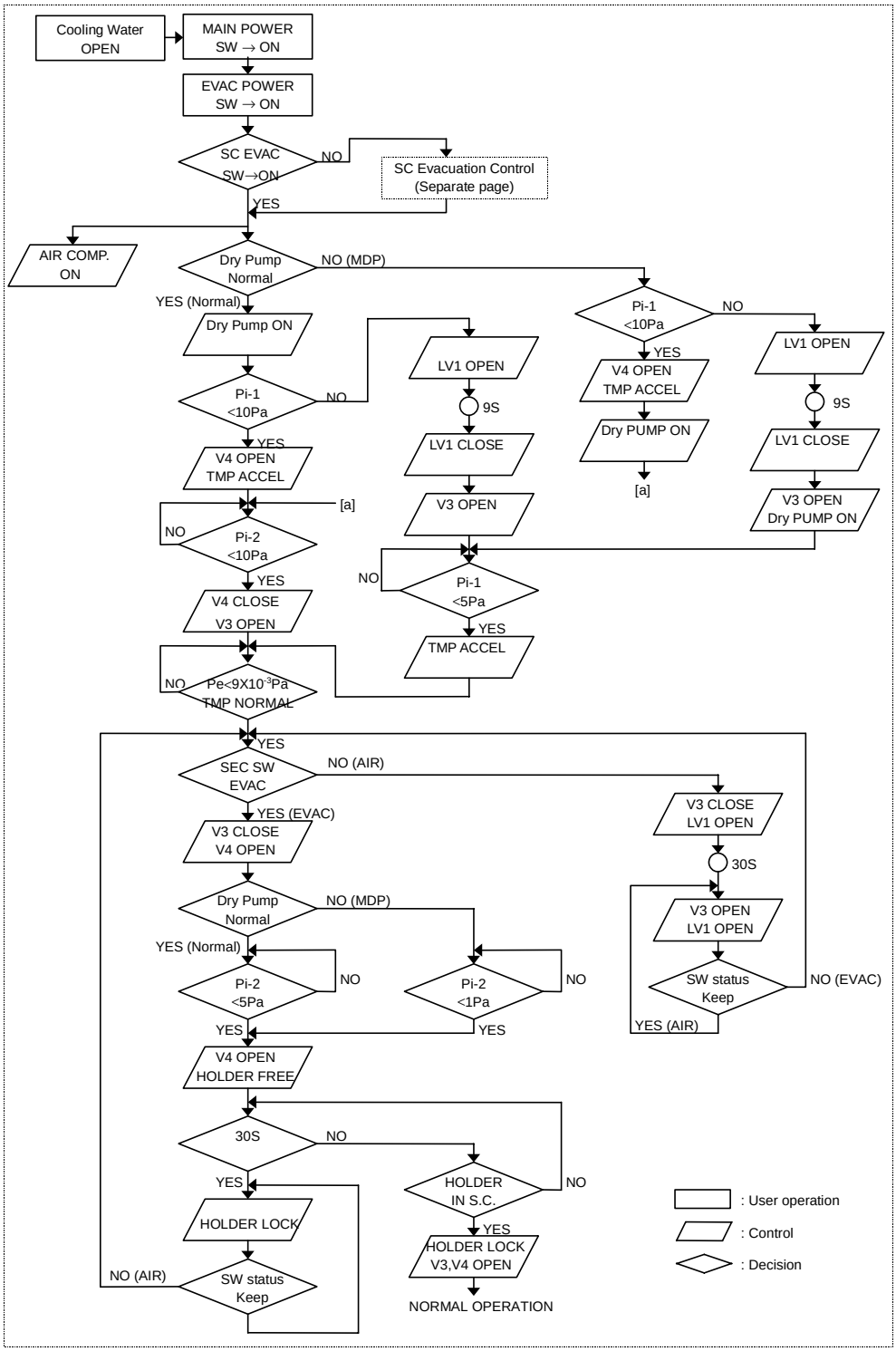

Normal Operation

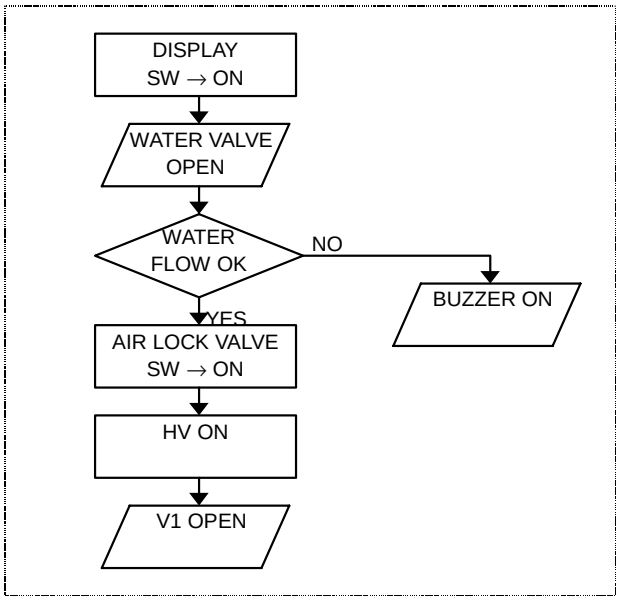

Stop Operation

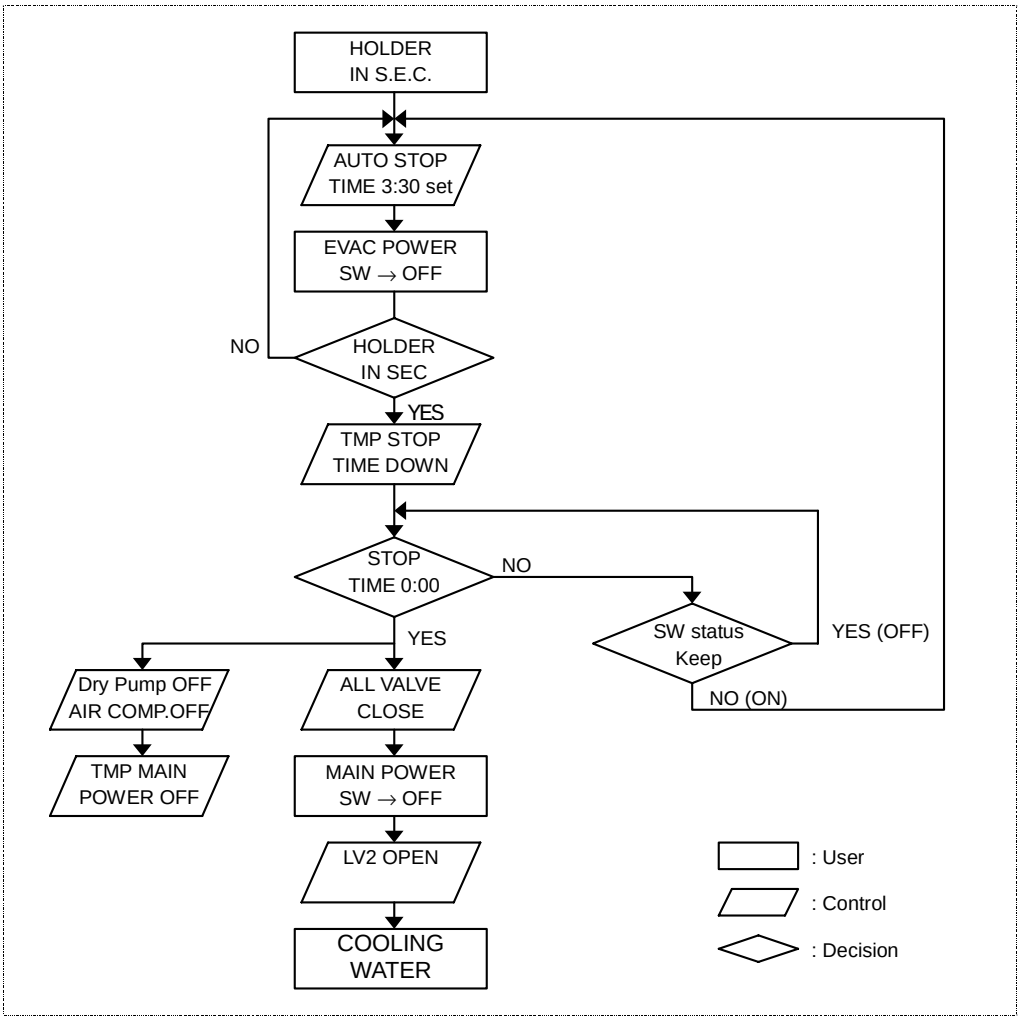

Specimen Removing Operation

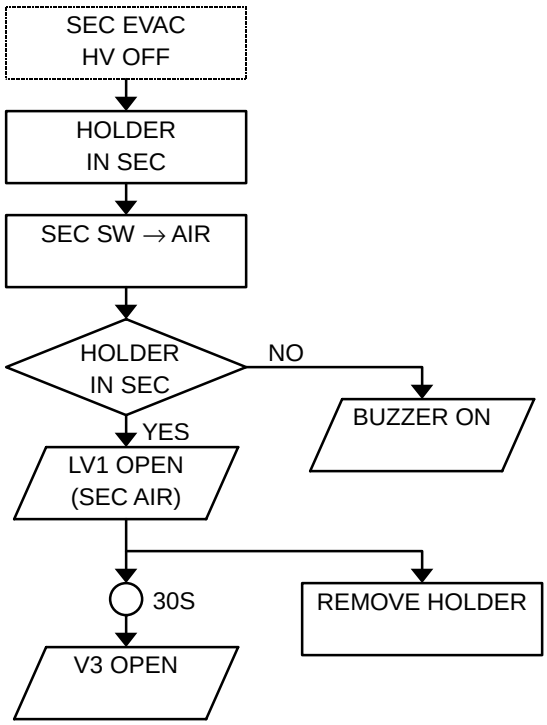

Specimen Inserting Operation

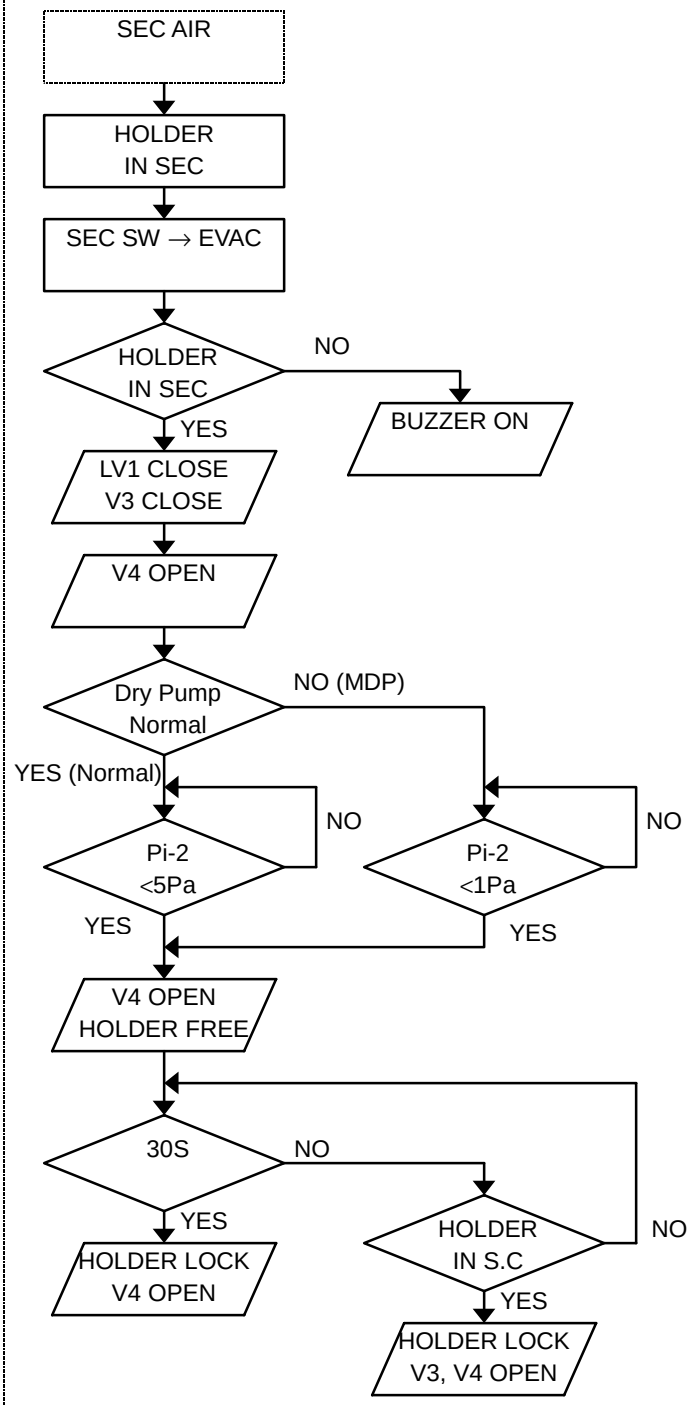

: User operation

: Control

: Decision

SC Leak Operation

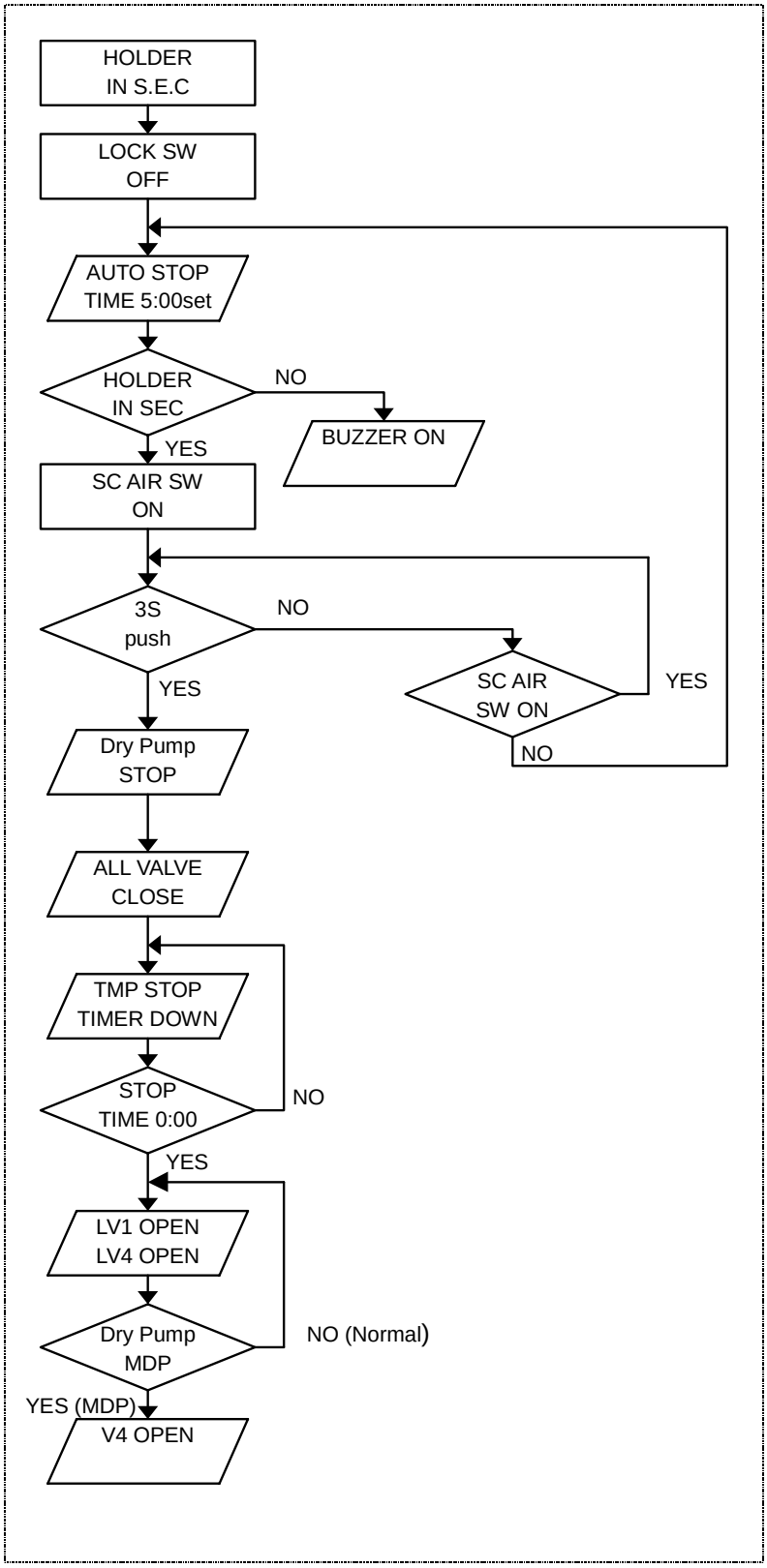

SC Evacuation Operation

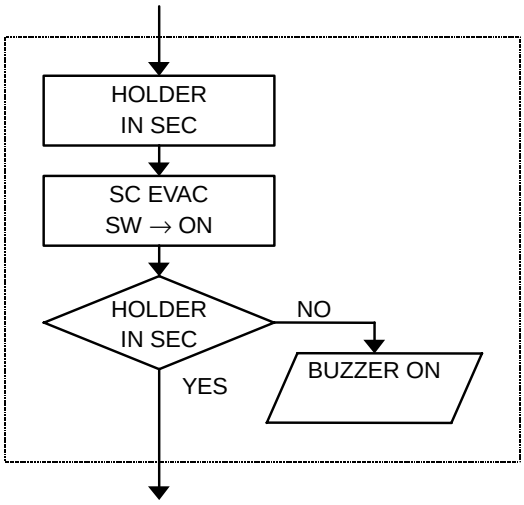

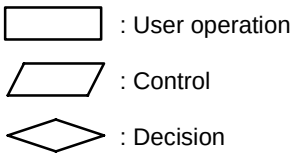

Tandem Configuration Flowchart

Starting Operation

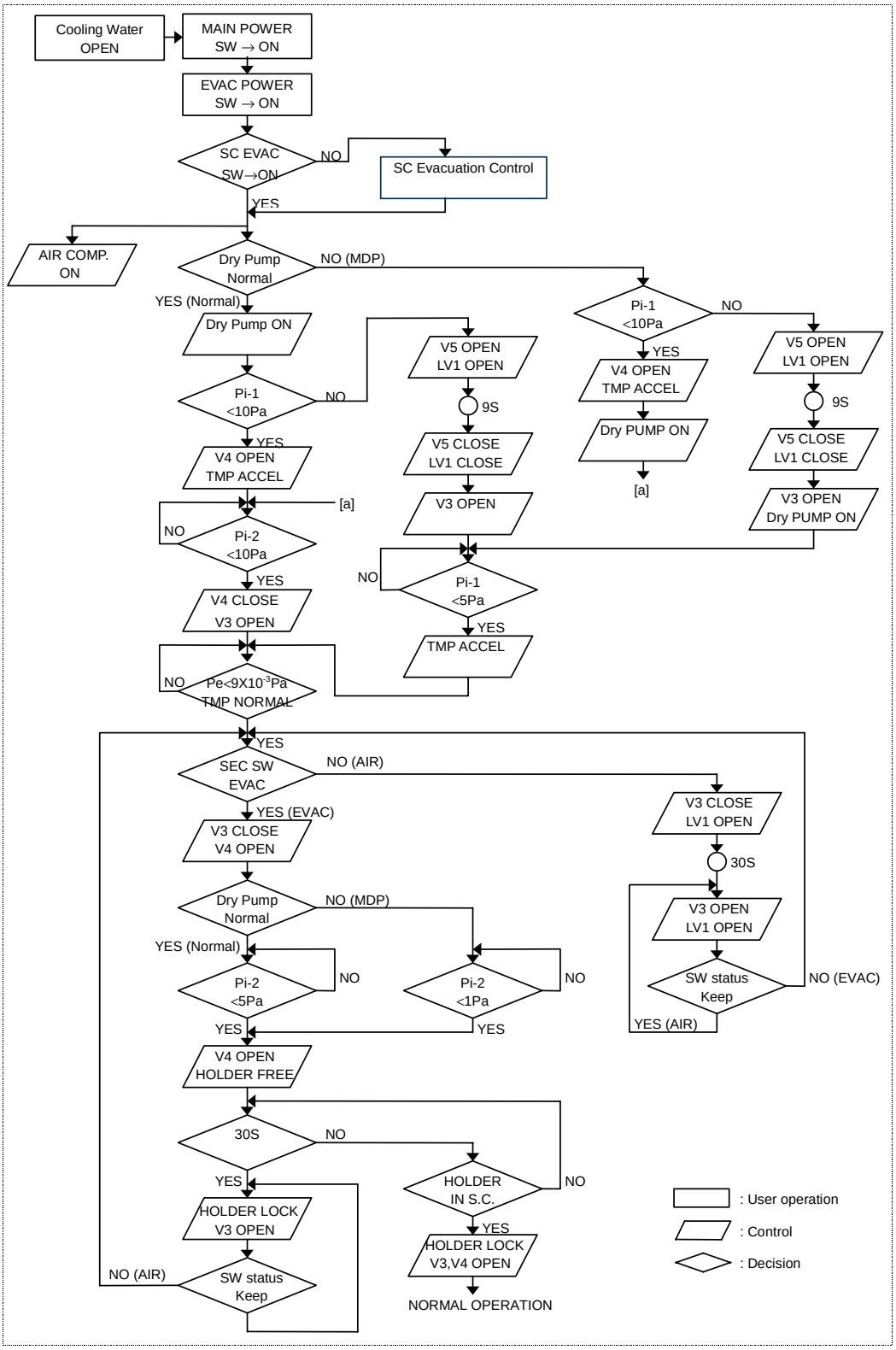

Normal Operation

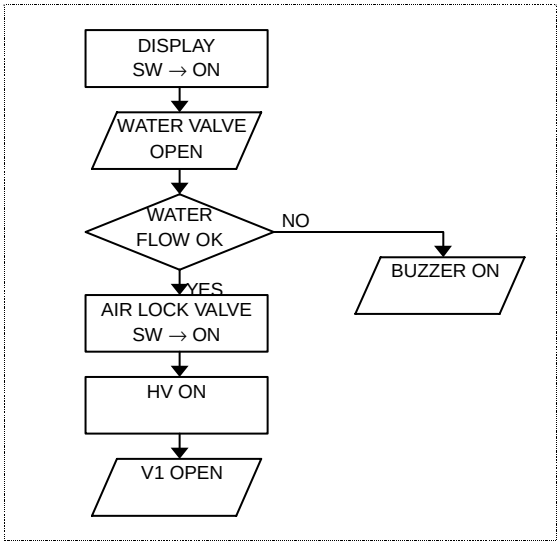

Stop Operation

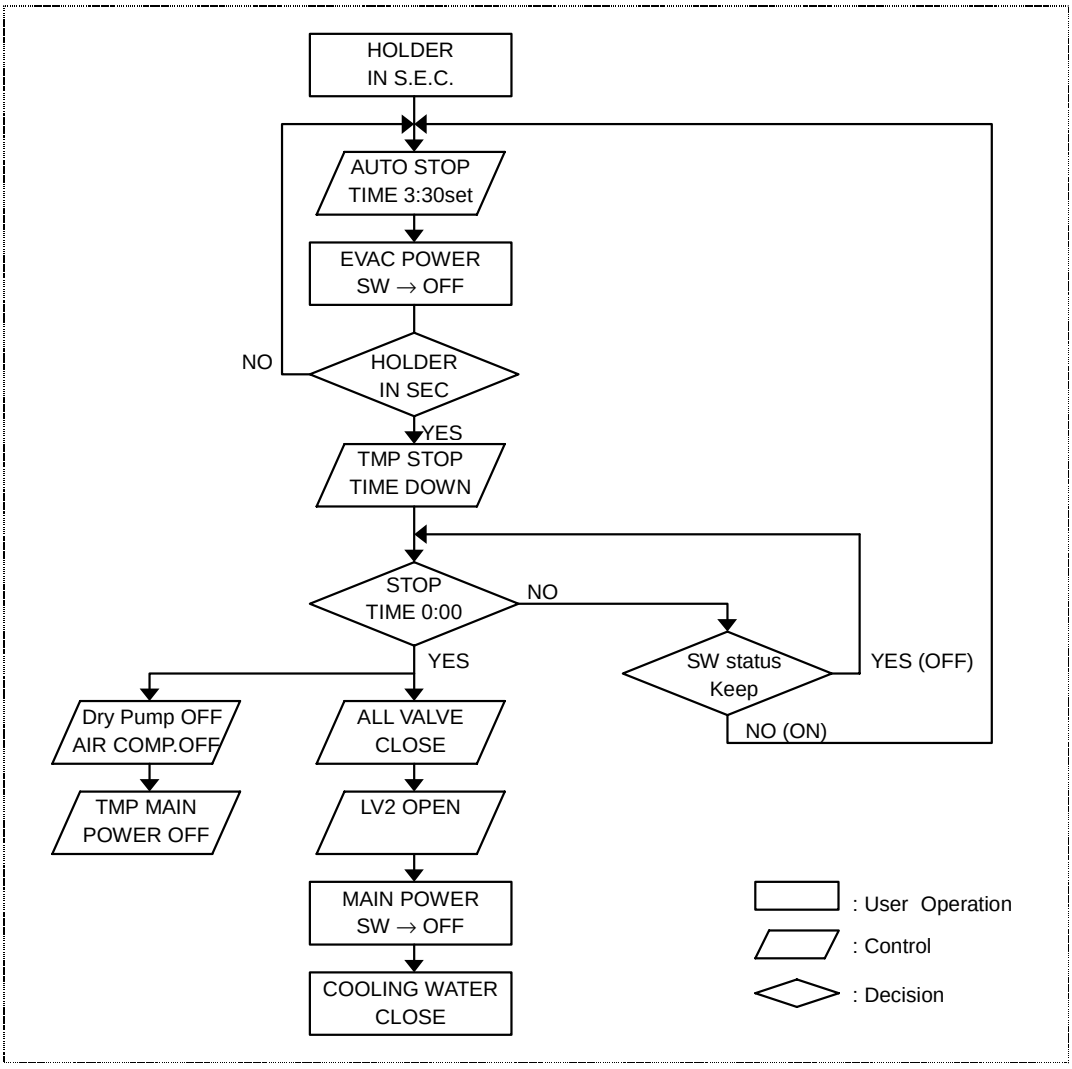

Specimen Removing Operation

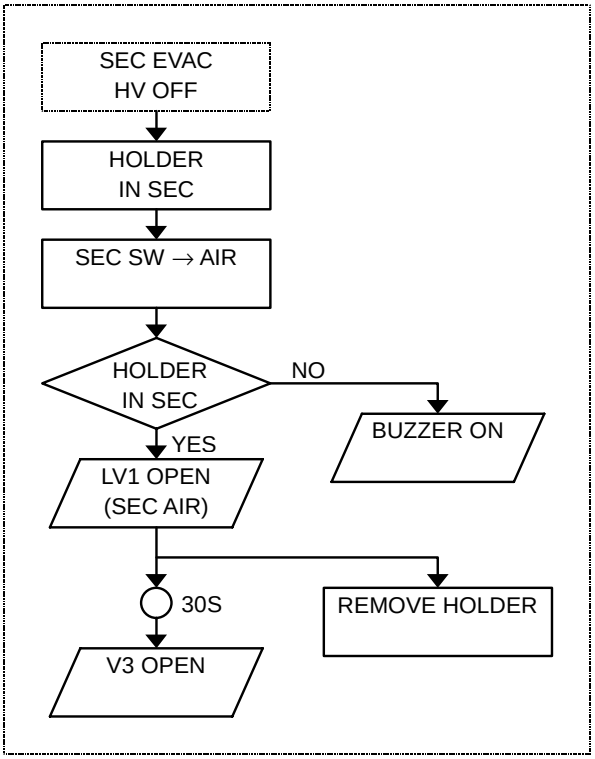

Specimen Inserting Operation

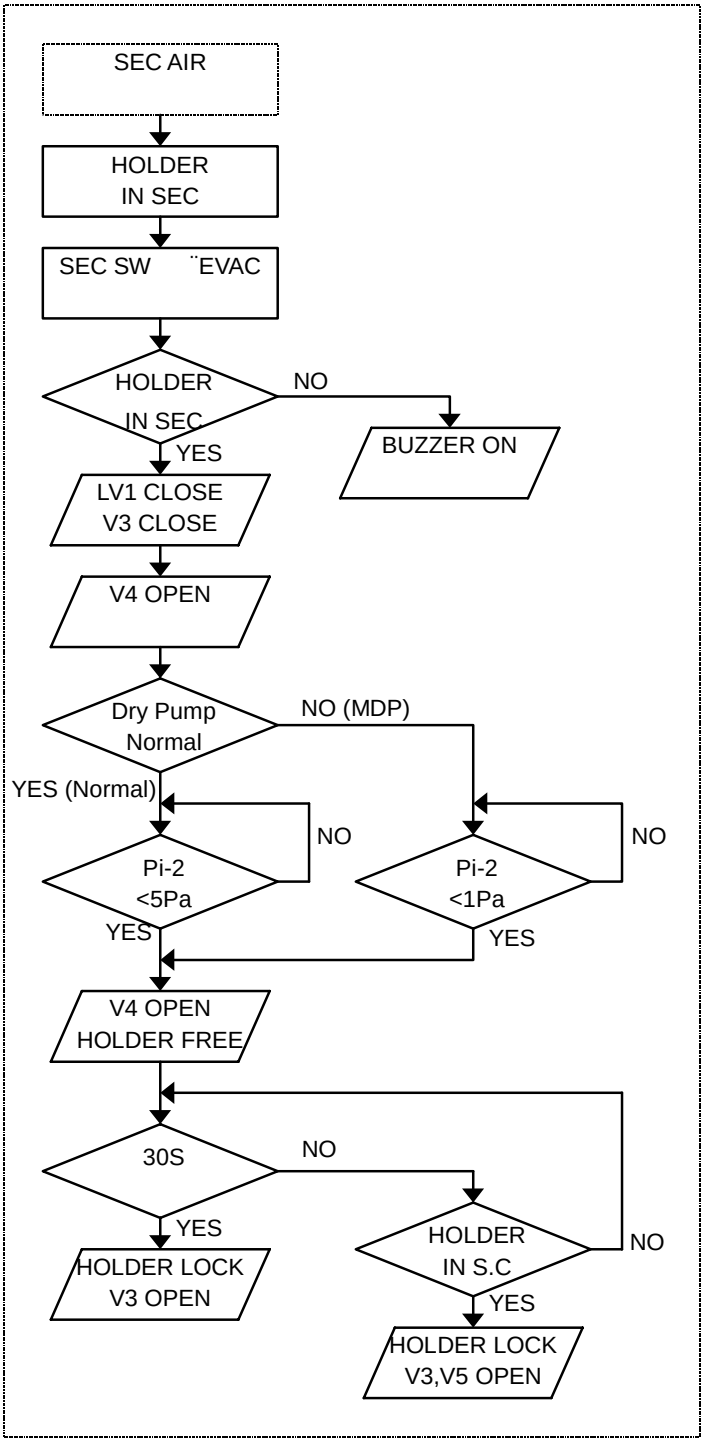

: User operation

: Control

: Decision

SC Leak Operation

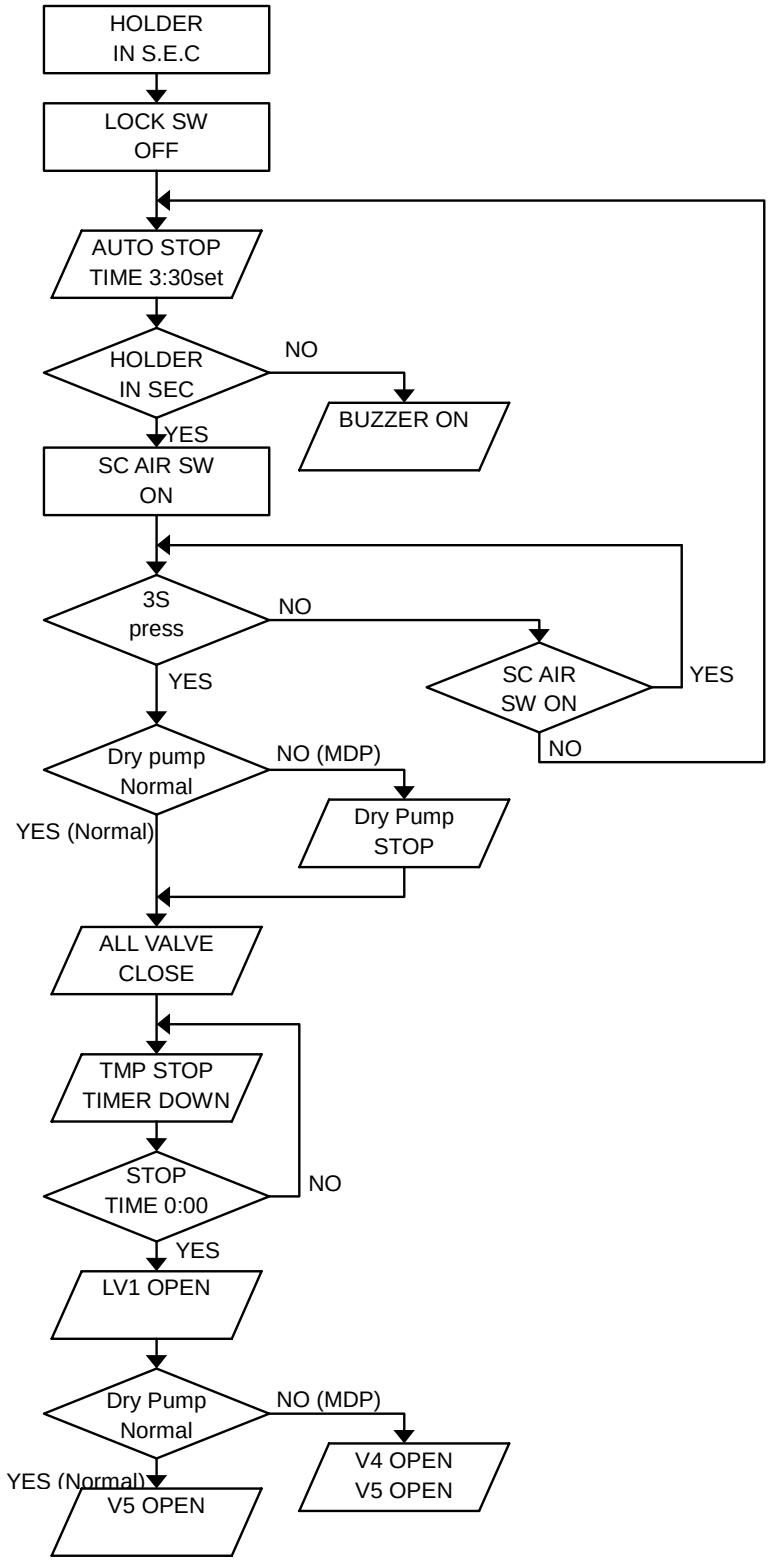

SC Evacuation Operation

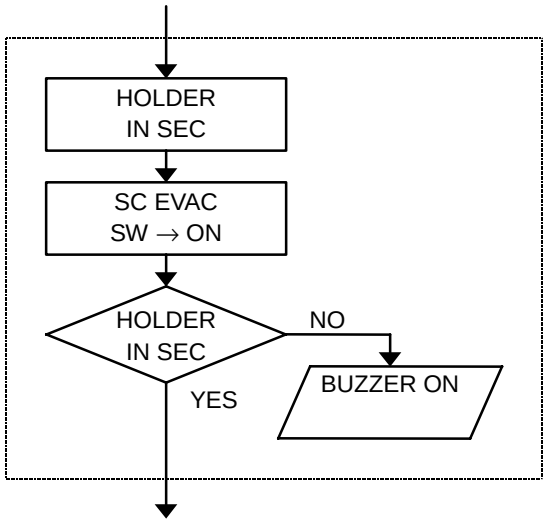

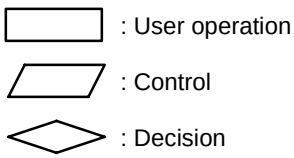

8.3 Operating Procedures

8.3.1 RAS function

A. Cautions on Using the RAS Function

- The RAS function uses a database file (RAS.mdb), which is generated by the SEM function. Therefore, the RAS function should be used after SEM has been launched at least once.
- In step (2) of C, [Display EVAC Condition], the RAS function receives data from the VRT (VME bus Real Time p.c.), which requires a connector.
- After the installation process is completed, execute the file SUM table creation application ("MakesSUM.exe" that is contained in the same installation CD. This application calculates the SUM values of the files coded in a setup log file (St5unst.log: a text file which is the output of files contained in the Installer) and outputs the results as a text file, "SUM table file (★1)".

  (★1) c:\Program Files\Pc_sem\Ras\Ras_FielsSUMTable.txt

  This backup for the original default conditions (normal state) can be useful in identifying problems that may occur later.

B. Explanation of the Maintenance Function and the Maintenance Screen

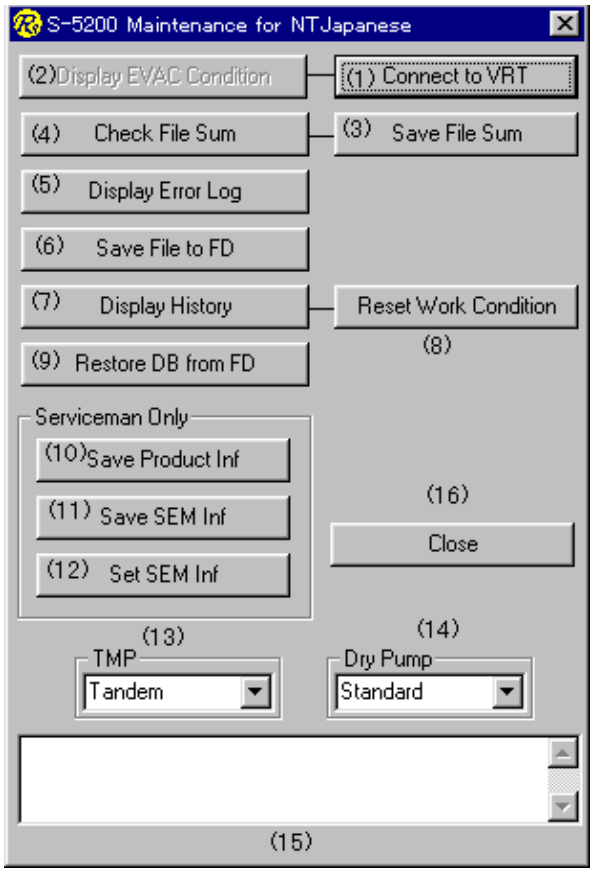

Figure 8-1: Main Screen

(1) **[Connect to VRT] button**

In order to load the data necessary for the display of operating conditions, this button connects the port (VRT) through which commands are sent and received.

(2) **[Display EVAC Condition] button**

This button produces a graphical display of the operating status of the system. When started up, this button is displayed in a cascading fashion (faint color, disabled), in which case you need to perform Step (1) above.

(3) **[Save File Sum] button**

This button determines the SUM value of the file necessary for the SEM function; it also creates and displays the file (SUM table file). Re-doing the file creation process requires the password. (For details, refer to the RasReset manual.)

(4) **[Check File Sum] button**

This button displays on the screen the results of a comparison of the current file status (SUM value) and the SUM value obtained in Step (3) above.

(5) **[Display Error Log] button**

This button displays the contents and meanings of any errors and output messages that are generated at SEM startup time and recorded in a database file (Ras.mdb).

(6) **[Save Log to FD] button**

This button selects and copies the following three files to a floppy disk: the database file (Ras.mdb) created by the SEM function, the file (Ras_EvacCondition.txt) that is created when the "Save" button on the screen is pressed, and the debug file (socket.log) created by the SEM.exe program.

(7) **[Reset WorkCondition] button**

This button resets the table "WorkCondition" (a table of chips used in the SEM and cumulative hours for oil, battery, and other items that need to be replaced) in the database file "Ras.mdb". Pressing this button causes the cumulative data to be zero-cleared and any replacement date to be changed to the current system date and time.

(8) **[Display History] button**

This button displays on the screen the contents of the operating status table that is created and revised based on the Etc table (containing SEM starting/ending times, HV on/off times, and so forth) in the database file "Ras.mdb". This button also displays graphs of the vacuum state created by the SEM function, emission current values, alignment information, files that are created by pressing the "Save" button on the [Display EVAC Condition] screen in Step (2) above, any vacuum data in the socket.log file, and emission data.

(9) **[Restore DB from FD] button**

This button either replaces the database file (Ras.mdb) on a floppy disk with the same file on the hard disk or creates (adds) both files. Execution of this function requires a database file on the floppy disk. This function can be used if the database file is lost or damaged for some reason (e.g., a PC breakdown). In order to use this function, you need to periodically back up the Ras.mdb file to a floppy disk, using the function described in Step (8) above.

(10) **[Save Product Inf] button**

This button creates a file (Ras_Insp.txt) that reflects the factory default settings for the system. The file can be copied to a floppy disk.

(11) **[Save SEM Inf] button**

This button creates a backup file for the information contained in the registry "HKEY_LOCAL_MACHINE\SOFTWARE\S5200".

(12) **[Set SEM Inf] button**

This button creates a SemSetng.REG file from the file created in Step (11) above. Double-clicking on this file causes the registry to be overwritten by the contents stored in the file.

(13) Sets the system and TMP. This button is used in Steps (2) and (10) above.

(14) Sets the system and the Dry Pump. This button is used in Step (10) above.

(15) Text box

Displays the processing status and fault-indicating messages.

(16) **[Close] button**

This button closes the Ras function.

C. Functions of the Buttons

(1) [Connect to VRT] button

Function summary

In order to load the data necessary for the display of operating conditions, described in C (2) below, this button connects the port (VRT) through which commands are sent and received.

Click on the Main Screen - [Connect to VRT] button. When successfully connected, the Main Screen - [Connect to VRT] button is displayed in a cascading fashion (faint color, with the button disabled), and remains disabled until the Ras function is closed (**Figure 8-2**). The port remains connected until the [Close] button on the main screen is pressed and the Ras function is closed.

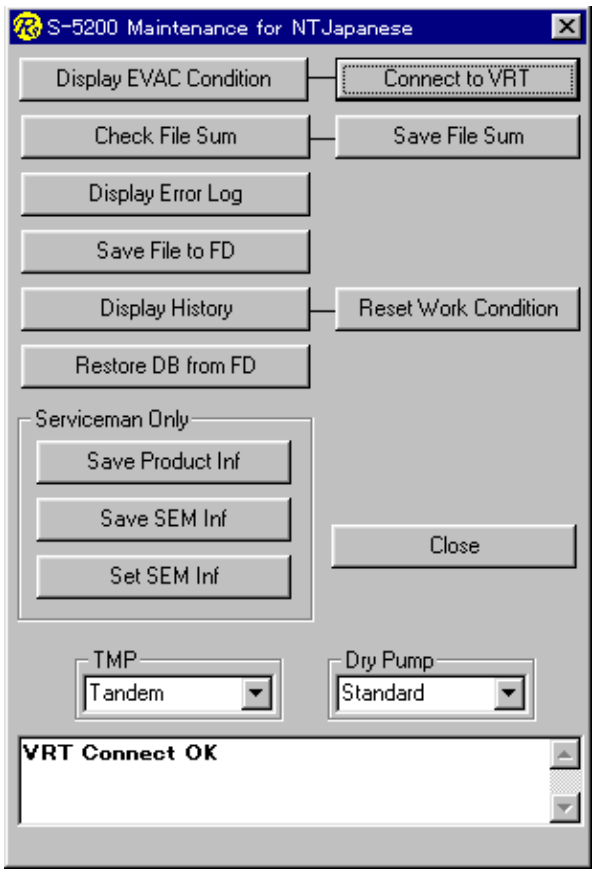

Figure 8-2: Successful connection to the VRT

If a connection fails, commands for requesting data cannot be sent, which prevents the display of system operating status as described in C (2). If a connection failure occurs, check to see whether the SEM.exe program is being started, whether an IP address is set incorrectly, or whether there are any loose wire connections.

(2) [Display EVAC Condition] button

Function summary

This button produces a graphical display of the operating status of the system on the screen.

1. Clicking on the Main Screen - [Display EVAC Condition] button brings up the screen shown in **Figures 8-4** and **8-5.** This button cannot be pressed if a connection to the VRT failed in C (1) above,

in which case you need to perform the operation in **C (1)**. Every time it receives a command, the VRT returns data. This screen allows you to set the timing in which commands are to be sent. The default is to transmit a command once every five seconds.

2. The screen display varies, depending on whether the pump being used is a DP or a TMP (**Figures 8-4**, **8-5**). Pump settings can be changed on the main screen [more on this later in **C (15)**].

3. The system operating status is displayed on the screen in different colors. The vacuum level measured with a vacuum gauge is displayed on the right of the screen. The text box located in the lower portion of the screen displays an illegal state or a comment on illegal data. The READ command is re-issued a specified number of seconds (default: 5 seconds) after it was issued. The time interval for command re-issuance can be changed in the [Command Send Interval] combo box on the screen. When vacuum data are received, the system displays a new screen. In other words, when an operating status screen is displayed, commands are automatically sent at fixed intervals and data are received and displayed until the [Close] button is pressed.

4. Pressing the [Snap Form] button causes the screen to be generated as a bitmap file and saved on a floppy disk, in which case you need to have a floppy disk handy. If there is not enough available space on the floppy disk, a "Copy the bitmap file to hard disk?" message (**Figure 8-3**) appears. Pressing the [Yes] button causes the file to be saved in the directory *c:\Program Files\Pc_sem\Ras* with the file name *EVACCond.bmp*. Pressing the [No] button returns control to the screen shown in **Figure 8-4** or **8-5**.

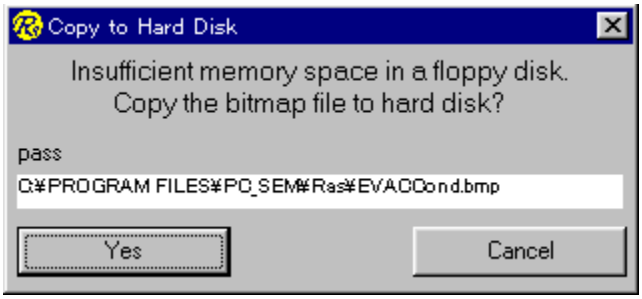

Figure 8-3: Bitmap File Copy

5. Whenever the [Save] button is pressed during the screen display, any subsequently received vacuum data are stored in the file "*c:\Program Files\Pc_sem\Ras\Ras_EvacCondition.txt*". The file created in this step can be used in **C (8)** for trend analysis using the [Display History] option (using the [Vacuum-Save] button) and viewed as a graph. Pressing the [Save] button shifts the display to [End]. Pressing the [End] button terminates the file recording process and returns control to the [Save] button.

6. Click on the [Close] button to terminate the display and return control to the Main Screen.

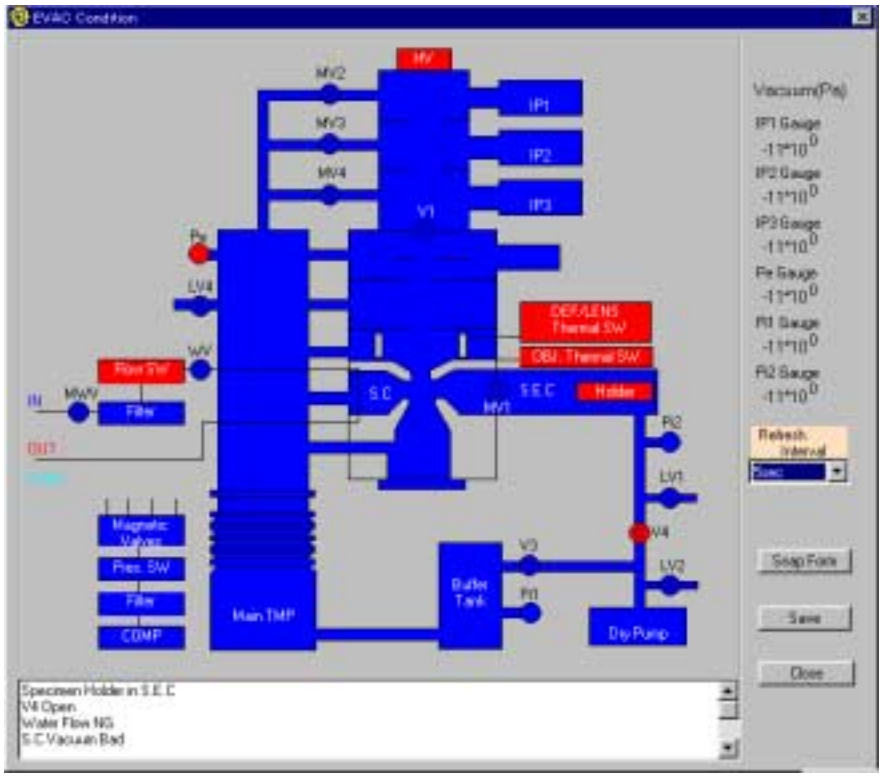

Figure 8-4: TMP is Standard

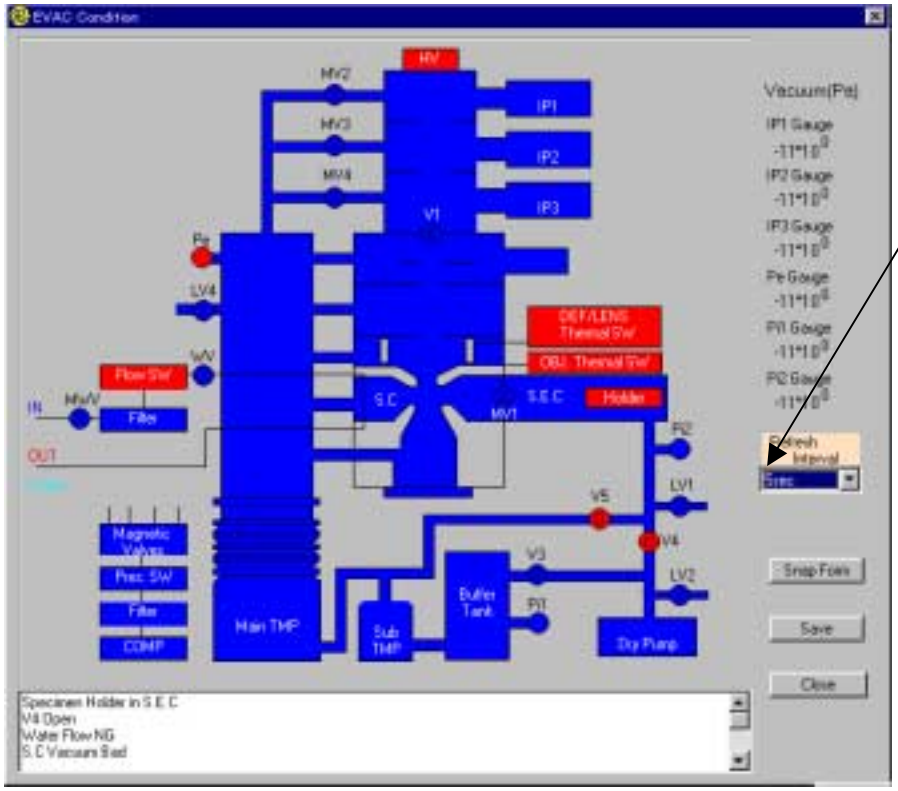

Command retransmission intervals can be changed.

Figure 8-5: TMP is Tandem

(3) [Save File Sum] button

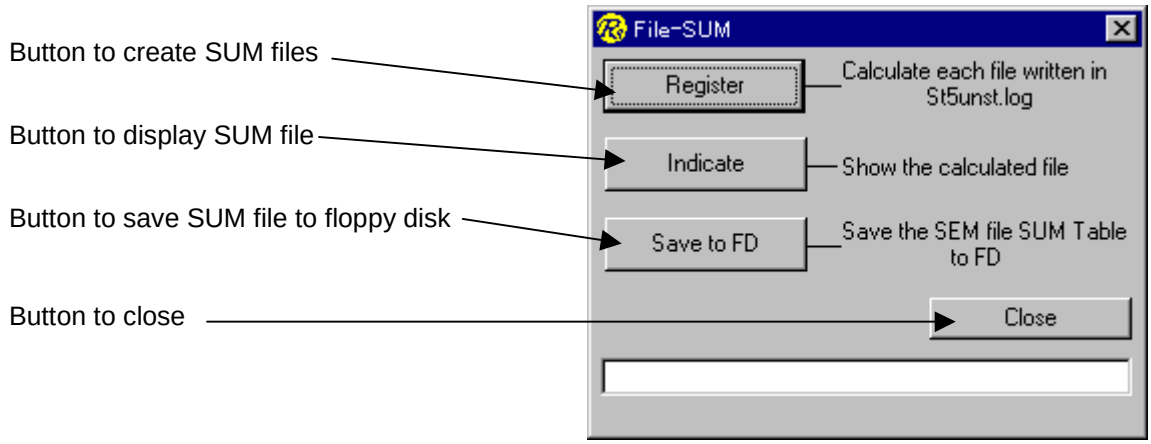

Figure 8-6: File-SUM Screen

Function summary

This button determines the SUM value for the file necessary for the SEM function; it also creates and displays the file (containing the SUM value determination results) and copies it to a floppy disk.

1. Pressing the [Save File Sum] button displays the [File-SUM] screen (**Figure 8-6**).
2. Click on the [Register] button. If a SUM table file (**★1**) does not exist, the system creates one. Version information on the S-5200 is downloaded and saved in the SUM file. The system determines the SUM value of the file recorded in a system log file **(★2)**. The file paths for those files and the SUM value are saved in the SUM file.

   (★2) C:\Program Files\Pc_sem\St5unst.log

3. If the SUM file is already created, the system displays a "Change SUM Table File" screen (**Figure 8-7**). When updating (re-creating) the SUM file, you need to enter the password and click on the [Yes] button. When not updating the file, click on the [Cancel] button. Refer to the Ras Reset manual for details.

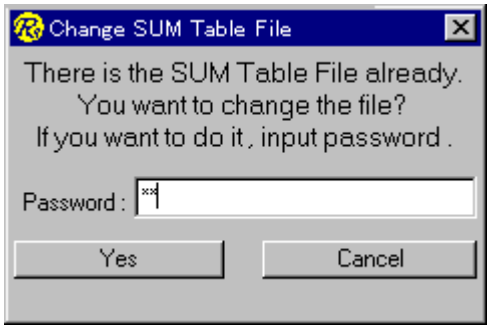

Figure 8-7: Password Input Screen for Over-writing the SUM File

When the SUM file update process is completed, control automatically returns to the screen shown in **Figure 8-6** and a "Complete" message is displayed.

4. Pressing on the [Indicate] button causes the contents of the SUM file to be displayed. If a SUM file is not found, a message to that effect appears. If the SUM file exists, the contents of the SUM table file (the file path and the SUM value), the file created date, and the software version number are

displayed on the “SUM Check Table” screen (**Figure 8-8**). Clicking on the [Close] button returns control to the File-SUM screen (**Figure 8-6**).

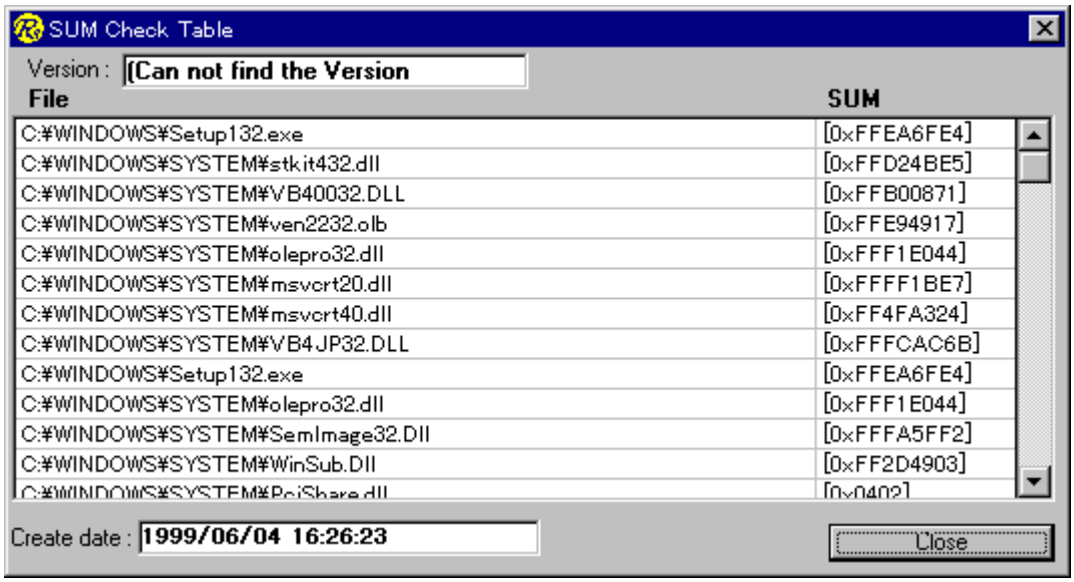

Figure 8-8: SUM Check Table Screen

5. Clicking on the [Save to FD] button causes the SUM table file to be copied to a floppy disk. The floppy disk should be saved as a backup for the table file.
6. Clicking on the [Close] button returns control to the Main Screen.

(4) [Check File Sum] button

Function summary

This button displays on the screen a comparison of the current file status (SUM value) and the SUM table file (★2) created in Step (3) above.

1. Click on the Main Screen-[Check File Sum] button.

   If a SUM file is not found, a message to that effect appears in the text box on the Main Screen, and the processing is terminated (**Figure 8-9**).

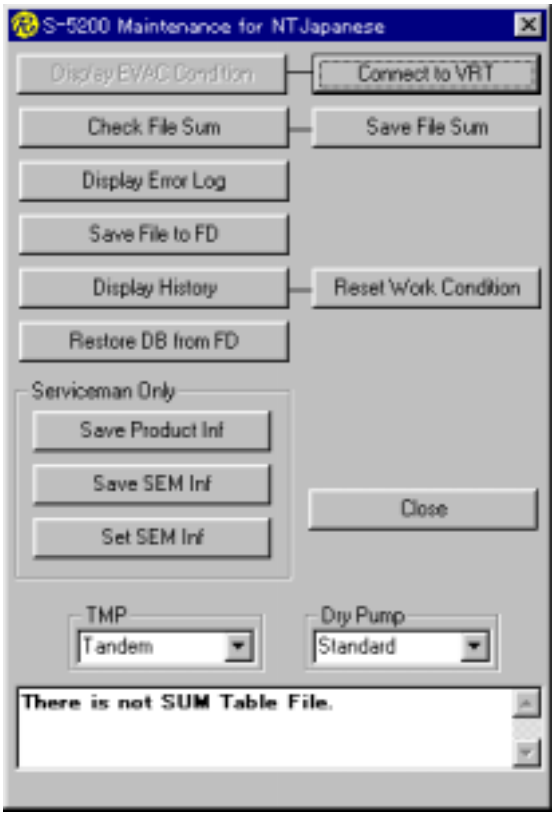

Figure 8-9: "No Sum table file" Message

If a SUM file is found:

(i) The version of the S-5200 as of the time when the SUM file was created and the current version are displayed in the "Table's version" and "Present Register Version" fields on the SEM file comparison screen (**Figure 8-10**).

(ii) Determines the current SUM value of the file recorded in a SUM table file (★2) and compares the result with the SUM value in the SUM file.

2. The result of the comparison is displayed on the SEM file comparison screen.

   The [File] column displays the file paths of the files that are checked.

   The [SUM] column indicates the current SUM value of each file.

   The [Result] column shows the results of comparisons as follows:

"OK"	Matching SUM values
"NG (File Changed)"	Mismatched SUM values
"NG (File not found)"	File not found

The entire results are displayed on the SEM file comparison screen.

All "OK"	"OK"
NG	Number of "NG" files

3. Clicking on the [Close] button returns control to the Main Screen.

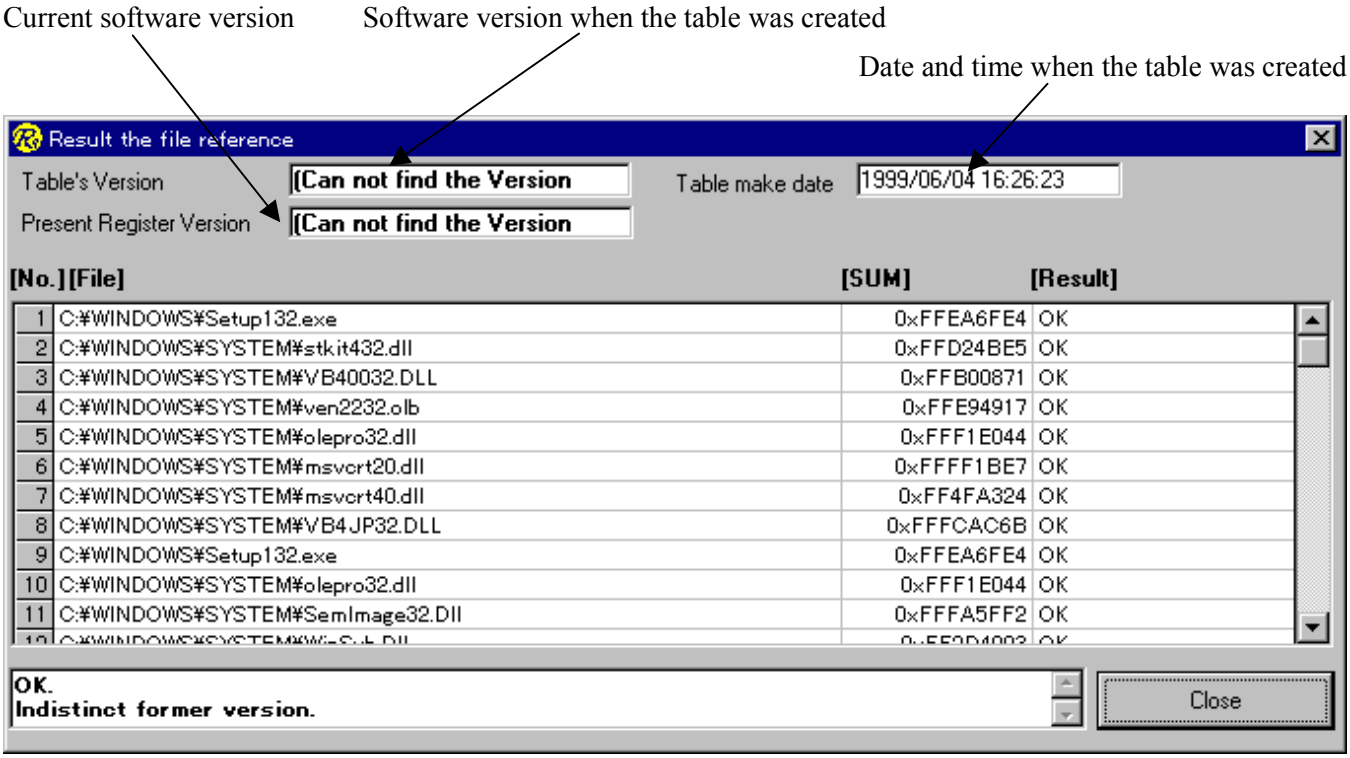

Figure 8-10: Comparison Screen between SUM Files and Current Files

(5) [Display Error Log] button

Function summary

Errors and messages that are generated at the time the SEM function is started are recorded in a database file (Ras.mdb). This button displays the times of error/message generation and the meanings of the message codes.

1. Pressing the Main Screen-[Display Error Log] button causes the system to reference the table [Error] in the database file (c:\Program Files\Pc_sem\Ras.mdb). If this table does not exist, a message to that effect appears on the Main Screen. If the table is found, the dates, the codes, and their meanings are displayed, as illustrated in **Figure 8-11**.

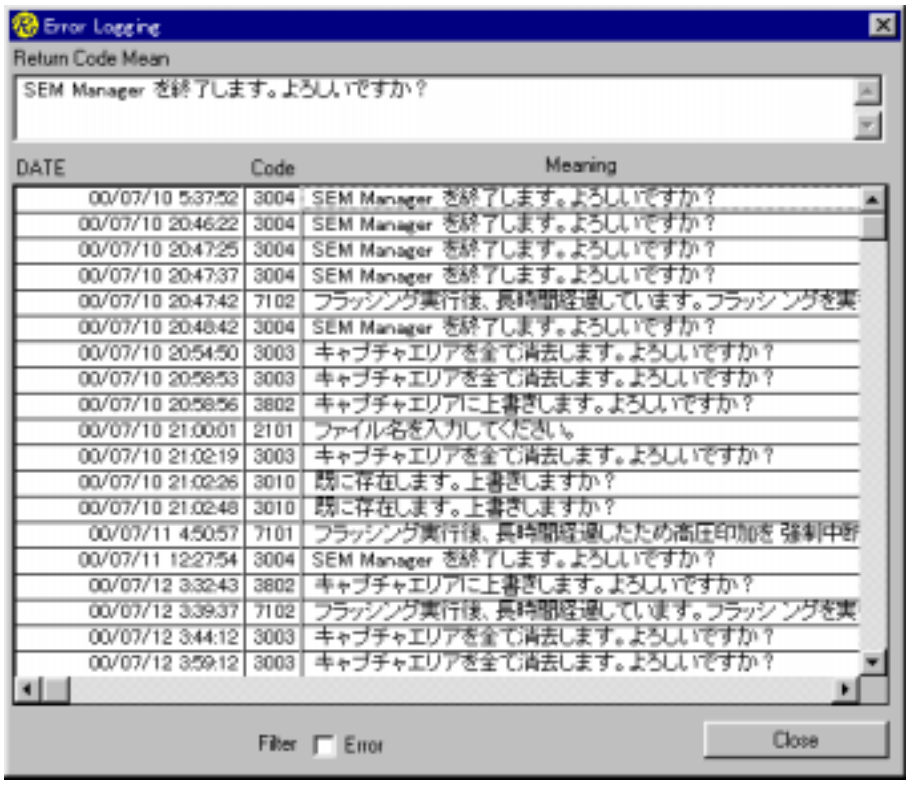

Figure 8- 11: [Error] Table Display Screen

For the meanings of the codes, the system references the file c:\Program Files\Pc_sem\RasCodeJ.mdb in the case of a Japanese operating system; in other cases (English), it references file c:\Program Files\Pc_sem\RasCodeE.mdb. These files, created in the respective operating systems, are provided because an English OS cannot read a file created under a Japanese language OS.

2. Checking the Error checkbox causes the display of errors only.

[Save Log to FD] button

Function summary

This button copies database files and debug files to a floppy disk.

1. Pressing the Main Screen [Save Log to FD] button displays the screen shown in **Figure 8-12**. The required files (★3) are searched for and any non-existing file names are displayed in a faint color (with the button disabled).

(★3) ① C:\Program Files\Pc_sem\Ras.mdb
② C:\Program Files\Pc_sem|Ras\Ras.ini
③ C:\Programs Files\Pc_sem\Ras_EvacCondition.txt
④ C:\Temp\socket.log

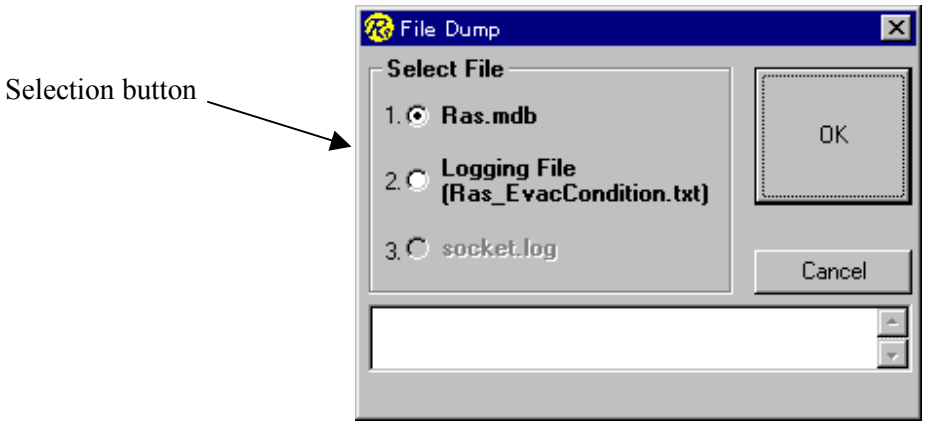

Figure 8-12: File Selection Screen

2. Select the file to be loaded onto the FD, and click on the [Save] button. Only one file can be selected at a time.

3. By selecting option [1.] in **Figure 8-12** and pressing the [Save] button, you can copy the stage and pump settings files (Ras.ini). The reason for the provision of these files is that with these files and the Ras.exe file, maintenance personnel can keep track of the operating status of your system without visiting your site.

   NOTE: Hitachi recommends that you copy the Ras.mdb file to a floppy disk, at regular intervals such as once a week or once a month. As long as the Ras function is saved on a floppy disk as a backup file, in the event of loss or damage to the Ras.mdb file the problem can be repaired. To deal with such an eventuality, you may need to use the function described in Step (11) below.

4. During the execution of option [1.] in **Figure 8-13**, i.e., during the copying of the Ras.mdb file to a floppy disk, if the disk runs out of space or the Ras.mdb file cannot be fitted on one floppy disk, the screen shown in **Figure 8-13** appears.

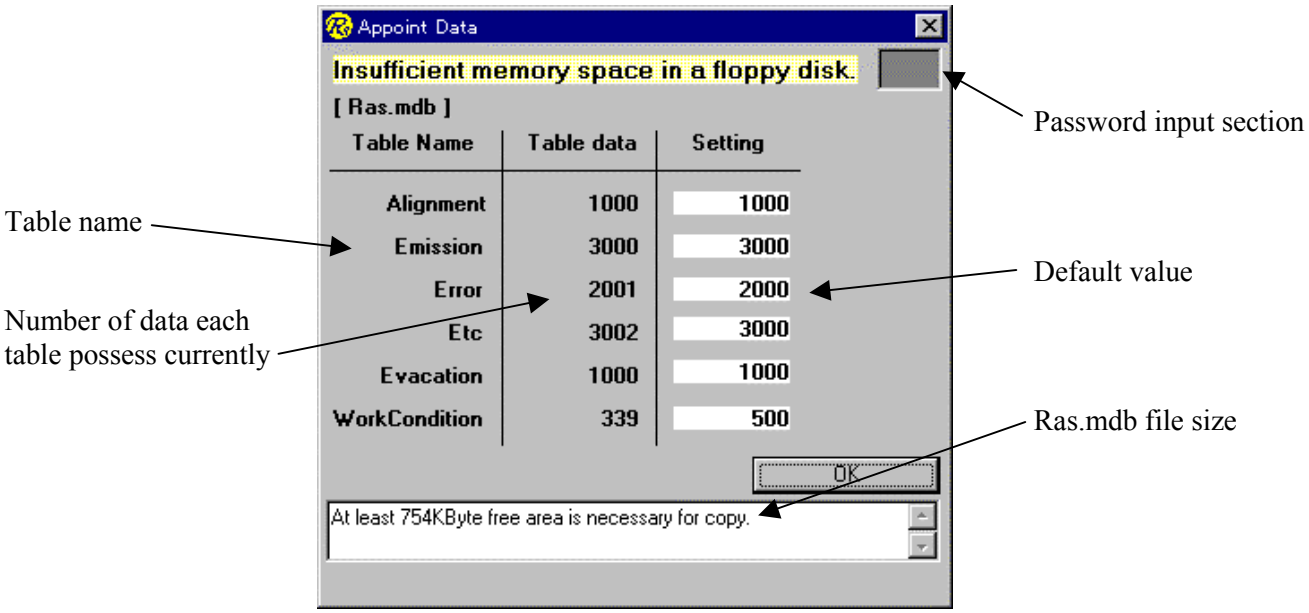

Figure 8-13: Copying to FD Failed

To do nothing, press the [OK] button. In this case, control returns to **Figure 8-13**. For each table, the number of data points to be loaded is given as a default value, as shown in the figure (the Setting column). For example, if the [Alignment] table contains 20,000 data points, the FD copying process loads 1,000 new data points with a date equal to the current date.
In the case of **Figure 8-13**, the copying process requires an available space of 754 kbytes on the floppy disk, which a blank disk can accommodate. Alternatively, you can reduce the file size, provided that you enter the password. In the password column shown in the figure, type "sar", which causes a data count change column to appear on the screen (**Figure 8-14**).

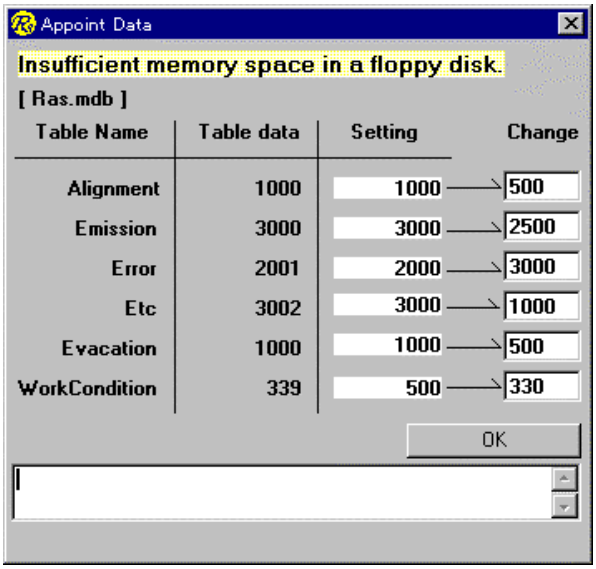

Figure 8-14: Data Count Change Screen

On this screen, you can specify any number of data points. As shown in the [Error] table example of **Figure 8-14**, specifying a data count greater than the actual number of data points will not cause an error. In this case, the system copies all existing data. Although a zero can be entered, a column with nothing specified will cause an error and display a message.

When finished with the input of changes, press the [OK] button. When this happens, the system will restart the copying process according to the specified number of data points. If an error still persists, as shown in **Figure 8-13**, repeat the process by further reducing the number of data points. Upon completion of the copying process, the screen displays "Complete", as shown in **Figure 8-12**.
You can return from the screen in **Figure 8-14** to the screen in **Figure 8-13** by pressing the "x" button located in the upper right portion of the screen.

(7) [Reset WorkCondition] button

Function summary

This button resets the contents of the table [WorkCondition] in the database file c:\Program Files\Pc_sem\Ras.mdb. Refer to the Ras Reset manual for details.

(8) [Display History] button

Function Summary

This button calculates and displays cumulative SUM uptime hours by reading data from the [Etc] table in the database file Ras.mdb.

(a) Displaying the Uptime Status

Press the Main Screen [Display History] button.

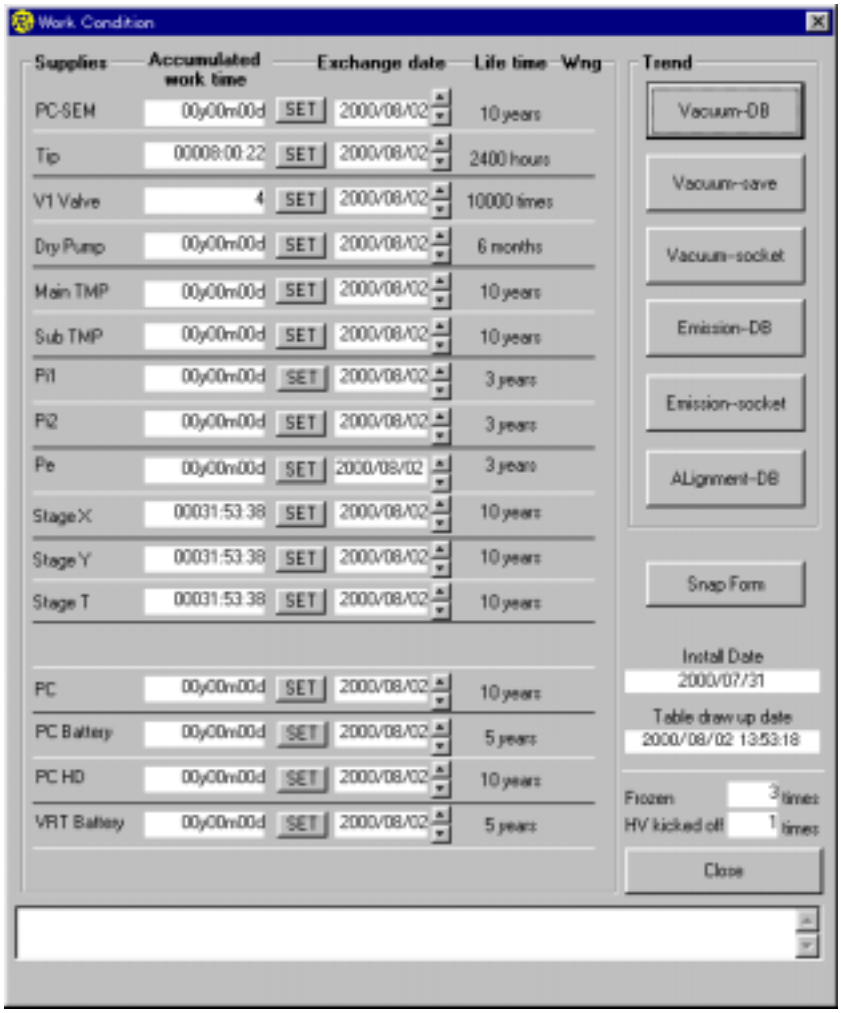

Figure 8-15: Displaying Uptime Status

If the [Etc] table contains data with a date newer than the data loaded into uptime status data (created in the [WorkCondition] table in the Ras.mdb file), the system reads the new data into the uptime status data (by adding them to the cumulative time) and displays them as illustrated in **Figure 8-15**.

- *PC-SEM* and *StageX-T* contain the cumulative hours of SEM uptime, from the time SEM is started until it is closed.
- *Tip* contains the cumulative hours of HV, from the time the HV is turned on until it is turned off.
- *PC-SEM, Dry Pump, TMP, Pi1, Pi2, Pe, PC, PC Battery, PC HD*, and *VRT Battery* display the elapsed time from the time these items were replaced (since the Exchange date in **Figure 8-15**) until the present time.
- *V1 Valve* is a count of the number of times the HV has been turned on.
- "Lock" in the lower right portion of the screen indicates the number of times the SEM.exe program has ended (aborted) without a SEMOFF.
- "HV kicked off" is a count of the number of times in which HV-ON was issued without a corresponding HV-OFF during the execution of SEM.exe.

If there are no uptime status data but some data exist in the [Etc] table, the system creates and displays new uptime status data. Even if a Ras.mdb file does not exist or no uptime status tables exist in that file, the screen shown in **Figure 8-15** is displayed. In this case, however, buttons other than [Vacuum-save], [Vacuum-socket], and [Emission-socket] are disabled.

If TMP on the screen is Standard, no Sub TMP items are displayed. The [Set] button will be explained in **Item (b)** below.

In the warning indicators (Wng), a yellow lamp comes on when usage approaches (85%) the value coded in the "Life Time" column on the screen, and a red lamp lights up when this value is exceeded.

The button in the "Trend" column. from top to bottom, graphically display the following data: Evacuation table data in a database file(Ras.mdb); the file created by the [Save] button on the operating status display screen in Step (2) above **(★3 ③**);

Vacuum data (GET STRD …) in the socket.log debug file;

Emission table data in the database file;

Emission current data (GET EMIS …) in the socket.log debug file; and

Alignment table data in the database file.

The [Set Install Date] button will be explained in **Item (e)** later.

The [Snap Form] button loads the named screen as a bitmap file. Refer to **Item (2) 4**. The file name is WorkCond.bmp.

Clicking on the [Close] button returns control to the Main Screen.

(b) Resetting the Various Parts

The various parts can be reset by pressing the [Set] button on the screen shown in **Figure 8-15**.

1. Pressing the [Set] button brings up the password entry screen (**Figure 8-16**).

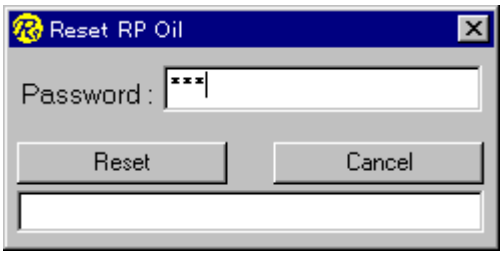

Figure 8-16: Password Entry Screen

2. An invalid password causes a message box to be displayed.
3. When the correct password is entered, **Figure 8-17** appears with respect to Tip, and Stage X-T.

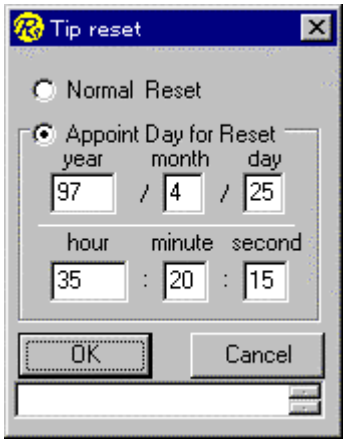

Figure 8-17: Uptime Status Table Time-setting Screen (1)

Selecting the “Normal Reset” option and pressing the “OK” button resets the time to the current date and time, and cumulative hours to zero. By selecting the “Appoint Day for Reset” option and pressing the “OK” button, you can specify the desired date and time. If blank or an invalid value is entered, a message appears in the lower portion of the screen. A date should be entered in a “YYY/MM/DD” or “YY/MM/DD” format.

With regard to *PC-SEM, Dry Pump, TMP, Pi1, Pi2, Pe, PC, PC Battery, PC HD*, and *VRT Battery*, **Figure 8-18** is displayed.

Figure 8-18: Uptime Status Table Time-setting Screen (2)

Selecting the "Normal Reset" option and pressing the "OK" button causes the same action as described above. By selecting the "Appoint Day for Reset" option and pressing the "OK" button, you can set any desired date. In this case, the cumulative time will be the length of time that has elapsed since a date was entered.

With regard to *V1 Valve*, the screen shown in **Figure 8-19** will be displayed.

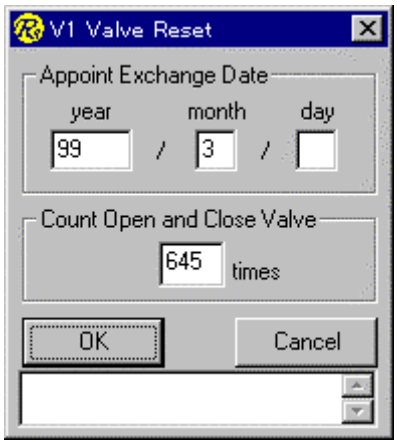

Figure 8-19: Uptime Status Table Time-setting Screen (3)

On this screen, you can change both the replacement date and the number of times the valves are opened and closed.

This part of the uptime status data is reset and stored. For details, refer to the Reset Reference.

(c) Displaying Previous/next Data on Various Parts

By pressing the scrollbar on the screen shown in **Figure 8-15**, you can alternately display the extent to which an older or newer part than a given part has been used. Each time the scrollbar is pressed upward, a newer date will be displayed. Conversely, each time the scrollbar is pressed downward, an older date will be displayed. If you continue to press the scrollbar until the end of data is reached, a "No more data" message appears in the lower portion of the screen.

(d) Trend Function

The buttons on the screen in **Figure 8-15** generate different graphs, as follows:

[Vacuum – DB] button:	The vacuum state of the database file (Ras.mdb)
[Vacuum – Save] button:	The vacuum state created by the Screen "Save" button (★3③)
[Vacuum – socket] button:	The vacuum state of the socket.log created by the SEM.exe program (★3④)
[Emission – DB] button:	The emission current value of the database file (Ras.mdb)
[Emission – socket] button:	The emission current value of the socket.log created by the SEM.exe program
[Alignment – DB] button:	Alignment information on the database file (Ras.mdb)

When a button is pressed, the system confirms the existence of the file; if a file is not found, it displays a message. If a file is found, the system checks the file, and displays the starting and ending dates of the data on the screen (**Figure 8-20**).

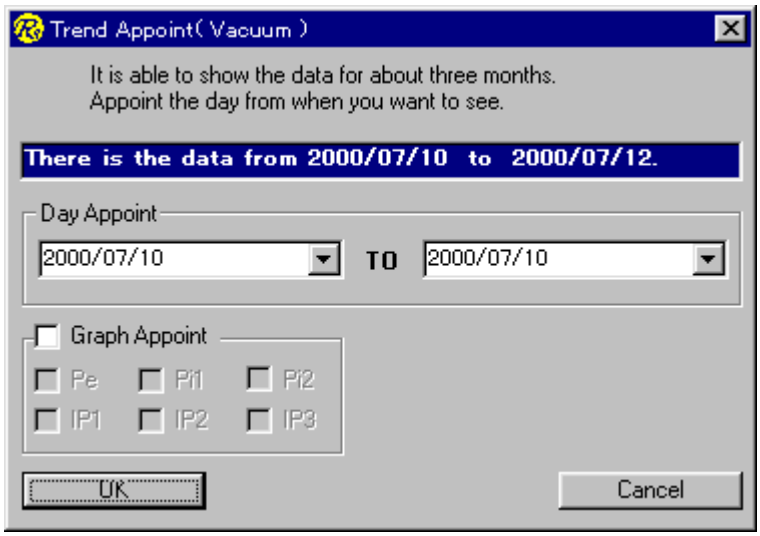

Figure 8-20: Date, Graph, and Time Specification Screen

Clicking on the [OK] button of **Figure 8-20** causes data with a specified time period to be displayed on a full screen. A graph can be specified only for the display of vacuum data.

Display of the [Vacuum–DB], [Vacuum–Save], and [Vacuum–socket] buttons (**Figure 8-21**):

The values of IP-1, IP-2, and IP-3 represent the values of the vertical axis on the left of the screen.

The values of Pe-1, Pi-1, and Pi-2 represent the values of the vertical axis on the right of the screen.

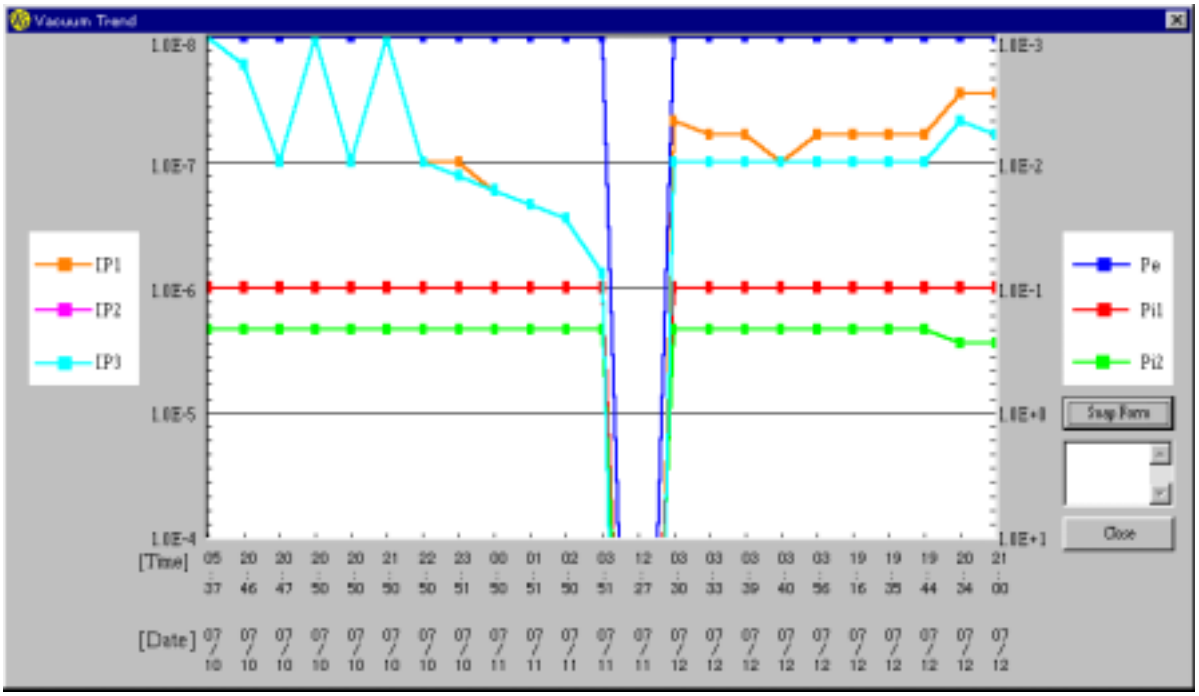

Figure 8-21: Vacuum System Data Display Screen

Display of the [Emission–DB] and [Emission – socket] buttons (**Figure 8-22**):

The vertical axis on the left of the screen represents emission current values.

The vertical axis on the right of the screen represents extracting voltage values.

The red marks on the horizontal axis on the screen indicate flashing.

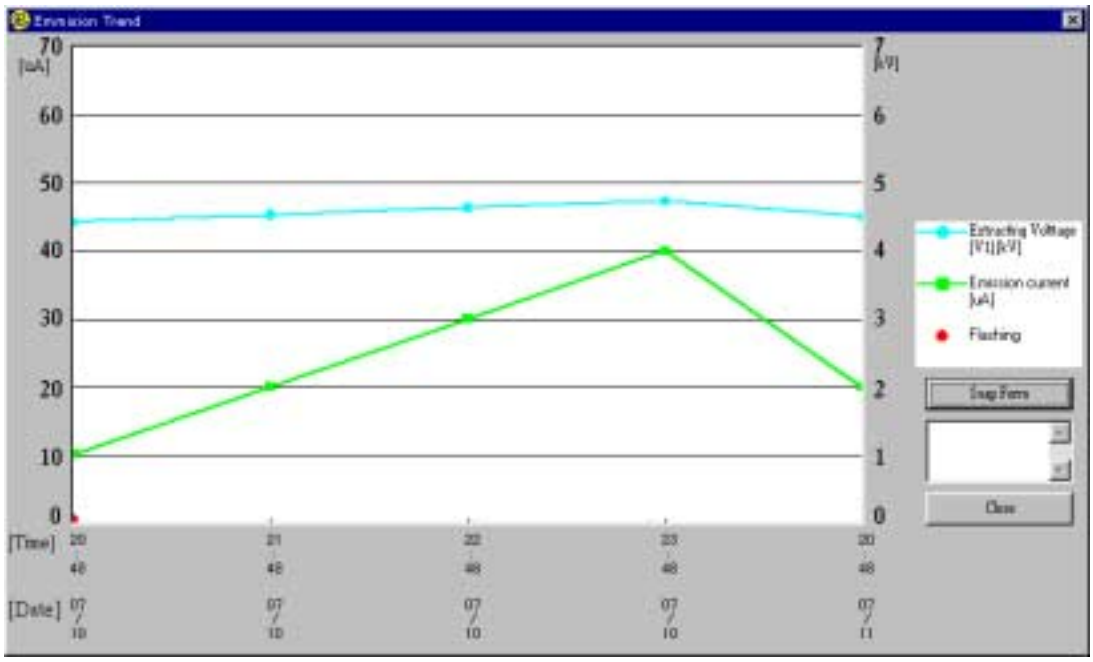

Figure 8-22: Emission Current Display Screen

Display of the [Alignment–DB] button (**Figure 8-23**):

The values of the vertical axis on the left of the screen are in units of digits.

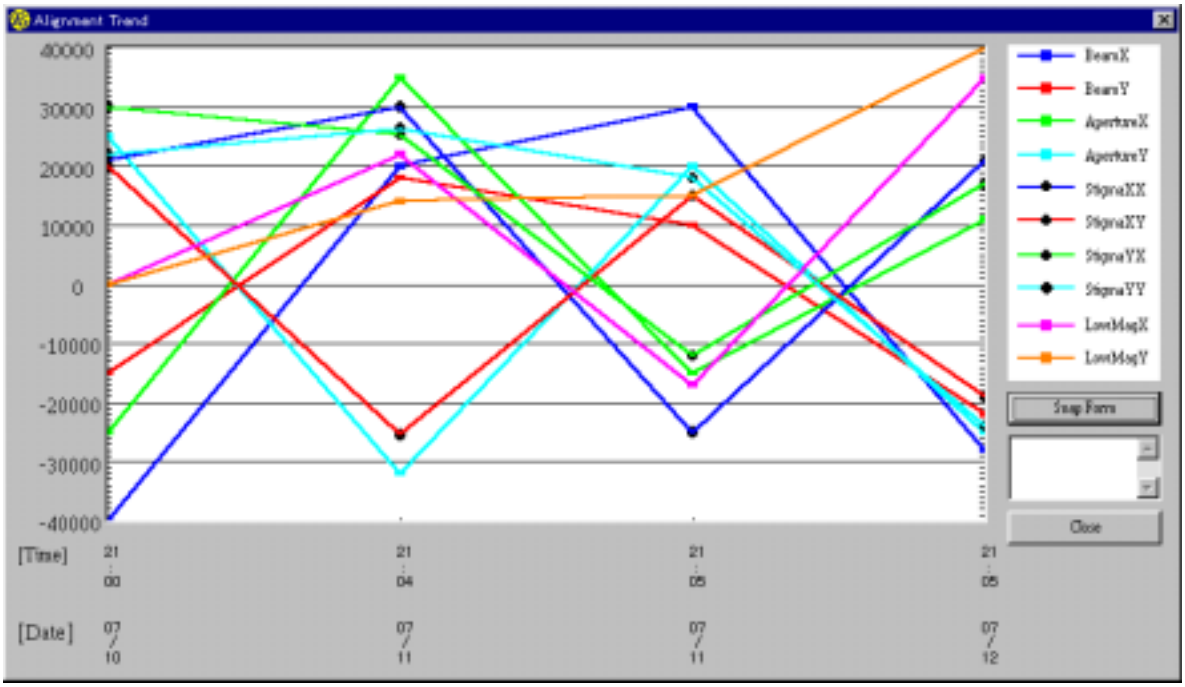

Figure 8-23: Alignment Data Display Screen

The [Snap Form] button shown in **Figures 8-21** through **8-23** represents the function that reads a given screen as a bitmap file. Refer to **C-(2)–4** above. The following file names apply:

The bitmap file from the [Vacuum–DB] button:	EvacDB.bmp
The bitmap file from the [Vacuum–Save] button:	EvacSave.bmp
The bitmap file from the [Vacuum–socket] button:	EvacSock.bmp
The bitmap file from the [Emission–DB] button:	EmisDB.bmp
The bitmap file from the [Emission–socket] button:	EmisSock.bmp
The bitmap file from the [Alignment–DB] button:	AlignDB.bmp

(These files are located in the directory *c:\Program Files\Pc_sem\Ras*.)

On each screen, clicking on the [Close] button returns control to the screen of **Figure 8-15**.

(e) [Set Install Date] button

This button allows you to register the date of SEM installation or version upgrade.

Click on the button. A date entry screen (**Figure 8-24**) appears.

Figure 8-24: Date Entry Screen

When a date is correctly entered and the [OK] button is pressed, the screen of **Figure 8-25** appears. Once a date is set, the [Set Install Date] button disappears from view. A date entered through this button is stored in a setup file (Ras.ini: ★3 ②) For any subsequent change of this date, you need to directly modify the file. If blank or an invalid date is entered, a message will appear. Pressing the [Close] button causes this screen to disappear.

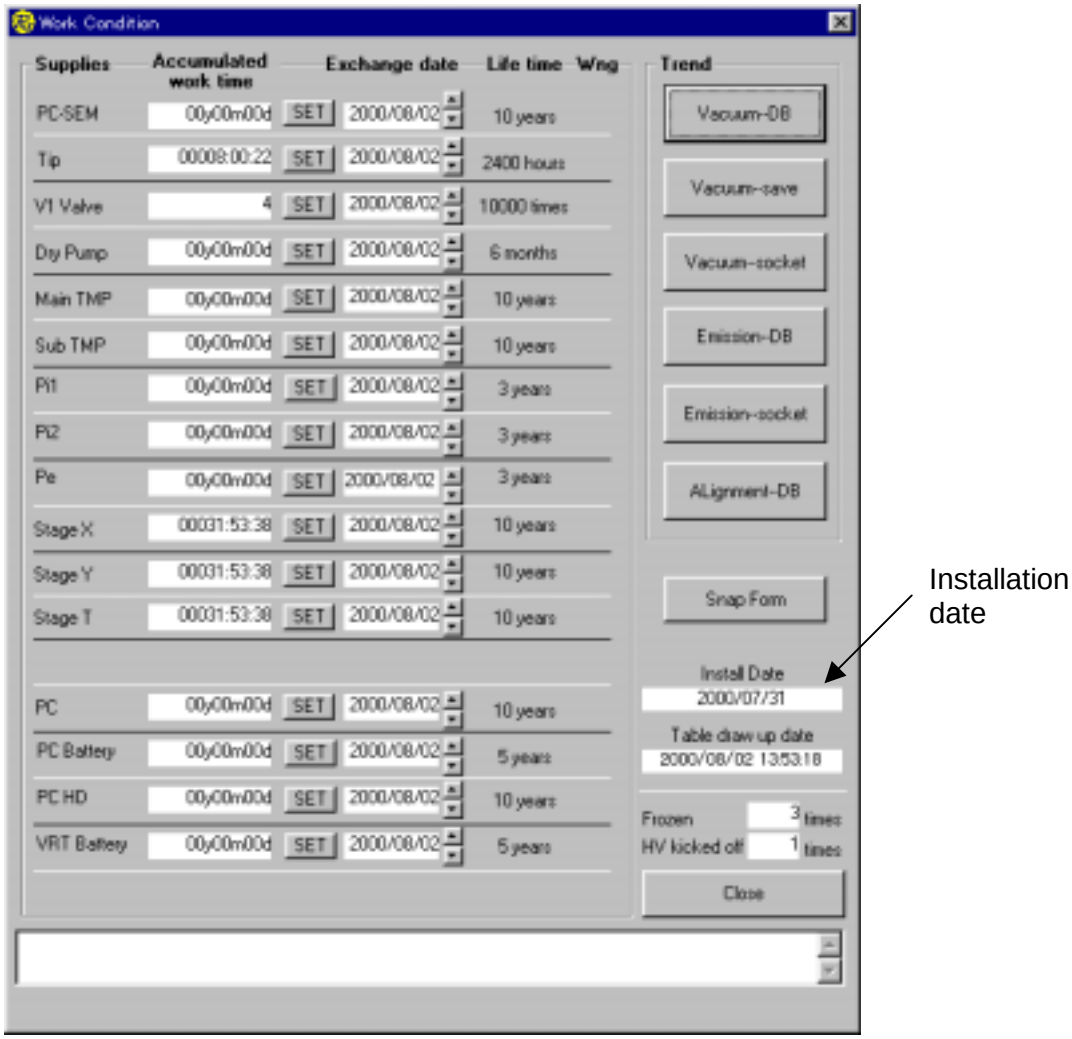

Figure 8-25: After an Installation Date is Set

(9) [Restore DB from FD] button

Function summary

This button loads a database file from a floppy disk and either rewrites the same file on the hard disk or adds it to the hard disk. In the event of damage or loss of the database file (Ras.mdb), this function can be used to restore the file, provided that the file had periodically (e.g., once a week or once a month) been backed up to a floppy disk, using Step (8) above. When completely rewriting an existing database file from a floppy disk, select the [REWRITE] button in **Figure 8-26**. When adding an FD file to a file on the hard disk, select the [SYNTHESIZE] button.

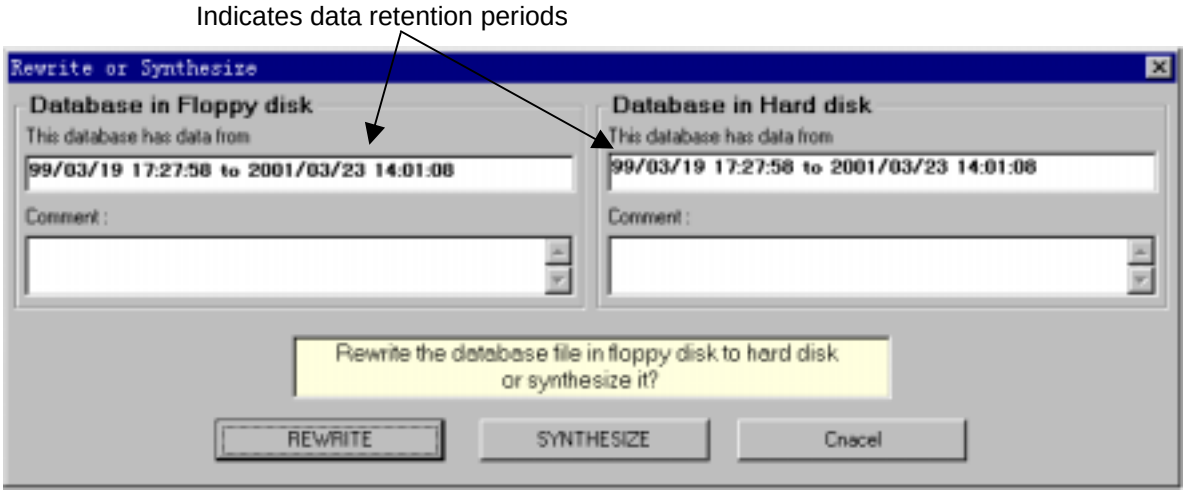

Figure 8-26: Database File Revision Selection Screen

A confirmation screen appears when the [REWRITE] or [SYNTHESIZE] button is pressed (**Figure 8-27**).

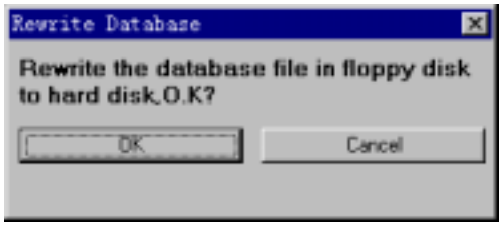

Figure 8-27: Confirmation Screen (the REWRITE button pressed)

The [OK] button executes the command. A message appears on the Main Screen upon completion of the command. Clicking on the [Close] button returns control to the Main Screen.

(10) [Save Product Inf] button

Function summary

This button saves in a file (Ras_Insp.txt) the data necessary for filling out a check sheet before the system is shipped.

- Saved information:
- SEM version
- HV Total time

- Total Flashing time
- NT version information
- Product ID
- CSD (service pack version)
- Time zone settings
- Logos.sys file, yes or no
- Option Setup information
  Serial Number, Stage Axis, STAGE OPTION, Stage Cotnrol/Version, DETECTOR RD500W, AUX-1, AUX-2, AUX-3, AUX-4, FREQUENCY, VIDEO FORMAT, VIDEO AMP, VIDEO PRINTER, FULL PANEL, PHOTO
- Option Setup (Software) information
- Screen Saver settings
  3D TEXT, bulletin board
  As a rule, an "NG" comment is output when a character is set. However, in NT, the characters "Your text goes here" are deemed acceptable.

1. Clicking on the [Save Product Inf] button causes the serial number (★4) to be loaded.

   (★4) Registry value: SerialNumber in the file HKEY_LOACL_MACHINE\SOFTWARE\S5200\OptionSetup

   If the system fails to get this value, a message appears on the screen and the processing terminates prematurely.

2. The item file is created after the serial number is successfully loaded. At the same time, this step makes two copies the EOAdjust.init file (★5), one with the original name and the other with a modified name. Taking a lot number and a subcode from the serial number creates the copy with a modified name. For example, if the serial number is "HI-S004-0005", the last two digits from "S004" and the last two digits from "0005" are taken to form a file name, "EO_04_05.ini" (the "EO" from "EOAdjust").

   (★5) c:\Program Files\Pc_sem\EOAdjust.ini

3. The three files thus created are stored in a special folder, temporarily in the directory "c:\Program Files\Pc_sem\Ras\". The folder is also created by taking a lot number and a subcode from the serial number, as described in step 2 above. In the above example, the folder name would be "52-04-05" (the "52" from "S-5200").

4. Subsequently, a message appears, asking the user whether the file is to be copied to the floppy disk.

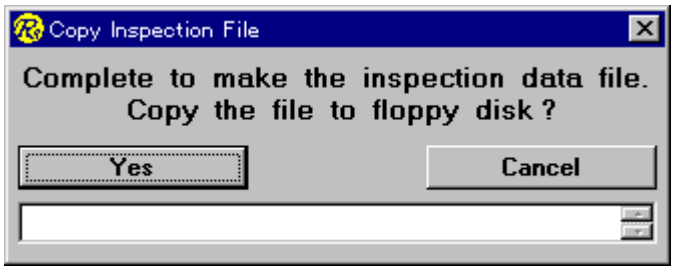

Figure 8-28: Message asking whether the File is to be copied to the FD

Pressing the [YES] button causes the three files to be copied to the FD on a folder-by-folder basis. If a floppy disk is not loaded on drive A, a message to that effect appears in the text box of **Figure 8-28**.

5. Whether you press the [YES] button to end the copying process or the [Cancel] button to abort it, either **Figure 8-29** or **Figure 8-30** appears if a file named EOAdjust.ini is not found or the file is set incorrectly.

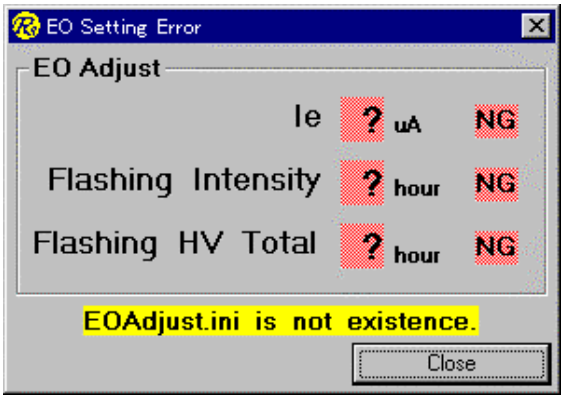

Figure 8-29: EOAdjust.ini File not Found

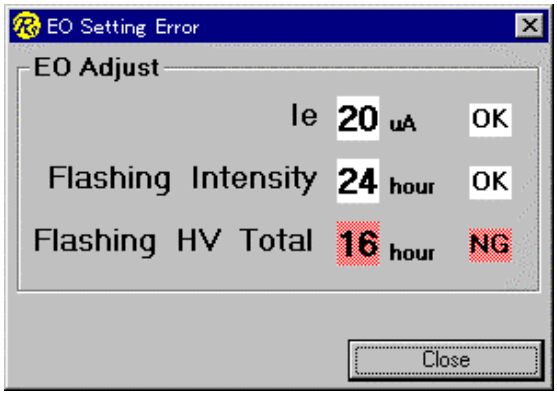

Figure 8-30: EOAdjust Setting Error

Settings:

Ie:	20 µA
Flashing Intensity:	24 hours
Flashing HV Total:	8 hours

If any of the above three parameters is set differently, the screen in **Figure 8-30** appears. Clicking on the [Close] button returns control to the Main Screen.

(11) [Save SEM Inf] button

Function summary

This button creates a backup file for SEM registry settings. By using this file, you can restore the system to normal condition in the event of damage to the registry for some reason. In order for the restoration process to work, you need to create this file when the system is running normally. Hitachi recommends that you press this button at least once after SEM is installed to create a backup file. The actual restoration process is described in **Step (14)** below.

1. Press the [Save SEM Inf] button.

   Pressing this button causes registry information (★6) to be written to a file. Because it can be updated to a new file, this file does not require a password or an overwrite confirmation. The file created in this step will be saved under the name "SemSetng" (no extension, read-only, hidden file) (★7).

   (★6) All information under the directory HKEY_LOCAL_MACHINE\SOFTWARE\S5200

   (★7) c:\Program Files\Pc_sem\Ras\SemSetng

   Upon completion of the file creation process, a "Complete" message appears on the screen.
   If the creation process fails, a message appears indicating that the file has not been set up.

(12) [Set SEM Inf] button

Function summary

Based upon the file created in Step (11) above, this button creates a registry revision file. If the SemSetng file (★7) does not exist, this button is displayed in a cascading fashion (disabled).

1. Press the [Set SEM Inf] button.

   A password entry screen appears (see **Figure 8-16**).

2. When the password is correctly entered, a "c:\Program Files\Pc-sem \Ras\Semsetng.REG file created – to be erased upon termination of RAS function" message appears. For details, refer to the Reset Reference.

(13) TMP setting combo box

TMP settings can be changed according to the specifications on the system. These settings, saved in the Ras.ini file (★3 ②), are used as default values when RAS is started next time.

(14) Dry Pump setting combo box

Dry Pump settings can be changed according to the specifications on the system. These setting, saved in the Ras.ini file as described above, are used as default values when RAS is started next time.

(15) Text box

The text box is used to display the processing status and various messages.

(16) [Close] button

This button closes the RAS function.

D. About the Database File (Ras.mdb)

This section provides a detailed explanation of the database file (Ras.mdb: c:\Program Files\Pc-sem\Ras.mdb) that is created by SEM.

The database file consists of six tables:

(1) Alignment table: maximum of 1,000 records
(2) Emission table: maximum of 3,000 records
(3) Error table: maximum of 2,000 records
(4) Etc table: maximum of 3,000 records
(5) Evacation table: maximum of 1,000 records
(6) WorkCondition table: maximum of 500 records

NOTE: This file cannot exist unless the SEM.exe program is started.

A table-by-table description follows.

(1) Alignment Table

In this table, each record consists of 11 fields.

	Field	Data Type	Meaning
1)	Date	(Date/time)	Record creation date (Date the record was read)
2)	BeamX	(Numeric: Long)	
3)	BeamX	(Numeric: Long)	
4)	ApertureX	(Numeric: Long)	
5)	ApertureY	(Numeric: Long)	
6)	StigmaXX	(Numeric: Long)	
7)	StigmaXY	(Numeric: Long)	
8)	StigmaYX	(Numeric: Long)	
9)	StigmaYY	(Numeric: Long)	
10)	LowMagPositionX	(Numeric: Long)	
11)	LowMagPositionY	(Numeric: Long)	

(2) Emission Table

In this table, each record consists of 3 fields.

	Field	Data Type	Meaning
1)	Date	(Date/time)	Record creation date (Date the record was read)
2)	EmissionCurrent	(Numeric: Long)	Emission current value (µA (microamperes)
3)	Vtext	(Numeric: Long)	Extraction voltage (V)

In graphs, the emission currents are plotted as “value x 0.1”. For example, the value “110” means “11.0 µA”.
In graphs, the extraction voltages are plotted as “value x 0.001”. For example, the value “4359” means “4.359 kV”.

(3) Error Table

In this table, each record consists of 2 fields.

	Field	Data Type	Meaning
1)	Date	(Date/time)	Record creation date (Date the record was read)
2)	Code	(Numeric: Long)	Generated code

Although the table name is “Error”, because all codes generated other than “0000” are loaded, a given code does not necessarily mean an error.

(4) Etc Table

In this table, each record consists of 3 fields.

	Field	Data Type	Meaning
1)	Date	(Date/time)	Record creation date (Date the record was read)
2)	Command	(Text)	
3)	Parameters	(Text)	

Command	Meaning	Applicable Parameters	Meaning
SEMON	SEM.exe started	SYSTEM-SEM	Login name
SEMOFF	SEM.exe ended	SYSTEM-SEM	Login name
HVN	HV On	20000,100:0,110,4435	(Se below.)
HVF	HV Off	0	
FLSH	Flashing	2,0	Flashing intensity

The following HV On parameters apply from left to right:

“High voltage settings (v)”, “emission current setting (x0.1 μA)”, “current high voltage”, “current emission current value”, and “current extraction voltage (v)”

(5) Evacation Table

In this table, each record consists of 10 fields.

	Field	Data Type	Meaning
1)	Date	(Date/time type)	Record creation date (Date the record was read)
2)	Valve	(Numeric: Long)	
3)	Lock	(Numeric: Long)	
4)	Pe	(Numeric: Long)	
5)	Pi1	(Numeric: Long)	
6)	Pi2	(Numeric: Long)	
7)	IP1	(Numeric: Long)	
8)	IP2	(Numeric: Long)	
9)	IP3	(Numeric: Long)	

10) HVStatus (Numeric: Long)

All numeric-type data in this table are converted into the binary format before they are used in Ras.

About Valve in 2):

bit0: Evac Power (0:OFF, 1:ON)
bit1: MV1 (0:OFF, 1:ON)
bit2: V1 (0:OFF, 1:ON)
bit3: V2 (0:OFF, 1:ON)
bit4: V3 (0:OFF, 1:ON)
bit5: V4 (0:OFF, 1:ON)

About Lock in 3)

bit0: DP_THERMAL_SW1 (0: OFF, 1: ON)
bit1: DP_THERMAL_SW2 (0: OFF, 1: ON)
---
bit3: WATER_SW (0: OFF, 1: ON)
bit4: COMP_SW (0: OFF, 1: ON)
---
bit7: Stge_Lock (0: FREE, 1: LOCK)

About HVStatus in 10)

bit0: Gun Evacation (0: Good, 1: Bad)
bit1: Emission Limit
When V1 is open (0: Limiter On, 1: Limiter Off)
When V1 is closed (Limiter Off)
bit2: DEF/LENS Power Over Heat (1: Over Heat)
bit3: Object Lens Over Heat (1: Over Heat)

In items 3) – 9), the high bits represent a coefficient and the low bits an exponent. These values are substituted into the expression “coefficient x a power of 10”.

(6) WorkCondition Table

In this table, each record consists of 55 fields.

Field	Data Type	Meaning
1) PC-SEMSUM	(Text)	Cumulative hours
2) PC-SEMCHGDATE	(Text)	Replacement date
3) PC-SEMNUM	(Numeric)	Index
4) TIPSUM	(Text)	
5) TIPCHGDATE	(Text)	
6) TIPNUM	(Numeric)	
7) VISUM	(Text)	
8) VICHGDATE	(Text)	
9) VINUM	(Numeric)	

	Field	Data Type	Meaning
10)	DPSUM	(Text)	
11)	DPCHGDATE		
12)	DPNUM		
13)	MAINTMPSUM		
14)	MAINTMPCHGDATE		
15)	MAINTMPNUM		
16)	SUBTMPSUM		
17)	SUBTMPCHGDATE		
18)	SUBTMPNUM		
19)	PI1SUM	Text	
20)	PI1CHGDATE	Text	
21)	PI1NUM	Numeric	
22)	PI2SUM	Text	
23)	PI2CHGDATE	Text	
24)	PI2NUM	Numeric	
25)	PESUM	Text	
26)	PECHGDATE	Text	
27)	PENUM	Numeric	
28)	STAGEXSUM	Text	
29)	STAGEXCHGDATE	Text	
30)	STAGEXNUM	Numeric	
31)	STAGEYSUM	Text	
32)	STAGEYCHGDATE	Text	
33)	STAGEYNUM	Numeric	
34)	STAGETSUM	Text	
35)	STAGETCHGDATE	Text	
36)	STAGETNUM	Numeric	
37)	PCSUM	Text	
38)	PCCHGDATE	Text	
39)	PCNUM	Numeric	
40)	PCBATTERYSUM	Text	
41)	PCBATTERYCHGDATE	Text	
42)	PCBATTERUNUM	Numeric	
43)	PCHDSUM	Text	
44)	PCHDCHGDATE	Text	
45)	PCHDNUM	Numeric	
46)	VRTBATTERYNUM	Text	

	Field	Data Type	Meaning
47)	VRTBATTERYCHGDATE	Text	
48)	VRTBATTERYNUM	Numeric	
49)	LASTDATE	Date/time	Date and time of latest data in [Etc] table
50)	LASTCOMMAND	Text	Command for the above item
51)	LASTPARA	Text	Parameter for the above item
52)	SEMOFFERROR	Numeric	Number of times SEMOFF was missing
53)	HVNERROR	Numeric	Number of consecutive HVNs
54)	MAKEDATAE	Date/time	Date last record was created
55)	TABLENUMBER	Numeric	Sequence number of record

In principle, each component (part) consists of three data items: cumulative uptime, replacement date, and index (number of times the item has been replaced).

8.4 Getting Started with the System

8.4.1 Confirming the Vacuum Level

Before starting the operation of the system, confirm the following items regarding the evacuation operation panel:

- The lamps IP1, IP2, and IP3 are on.
- IP1, IP2, and IP3 have a vacuum level that exceed the following levels:

  IP1: $2x10^{-7}$ Pa
  IP2: $2x10^{-6}$ Pa
  IP3: $7x10^{-5}$ Pa

In the case of a poor IP vacuum, baking processing should be conducted.

- The EVAC POWER switch is at the 1 position.
- The DP/MP, WATER, and AIR/PRES lamps are on.
- The HIGH lamp for S.C. VACUUM and S.E.C VACUUM is on.
- The AUTO lamp for GUN VALVE is flashing.
- The HIGH lamp for S.C. VACUUM and S.E.C VACUUM is on.
- The AUTO lamp for GUN VALVE is flashing.
- The OBJ.APT. switch is at the HEAT position.

When the objective lens aperture becomes contaminated due to an electron beam irradiation, the resulting electrical charge can generate an irregular electric field, with a reduction in image quality and an image drift due to micro-electric discharges. This phenomenon is especially pronounced at low accelerating voltages. The amount of contamination can be reduced by more than one order of magnitude by heating the aperture (to approximately 150ºC).

<Normal operating method>

The OBJ.APT switch on the evacuation operation panel should always be set to the HEAT position.

If the evacuation power supply (EVAC POWER) is ON (1), the heating continues even if the display power (DISPLAY POWER) is turned OFF (0).

The switch should be set to the OFF side only when introducing the atmosphere into the specimen chamber. An image drift can occur for 30 minutes after the switch is changed from the OFF side to the HEAT side.

<Maintenance operation>

Introducing air into the specimen chamber

When introducing air into the specimen chamber, such as for cleaning the objective lens aperture, check to see that no liquid nitrogen is in the anti-contamination trap. (The introduction of air into the specimen chamber with the anti-contamination trap still chilled can cause fogging and deterioration of the vacuum.) Turn off the

OBJ.APT. switch, wait for 20-30 minutes, and then let the specimen chamber leak. (This is to prevent the objective lens aperture from coming into contact with hot air and becoming oxidized.) The alarm buzzer will sound off if the SC/SEC switch on the evacuation operation panel is changed to the SC side in order to let the air in with the OBJ.APT. still at the ON position.

After Cleaning the Aperture

When the HIGH lamp of S.C VACUUM lights up after the evacuation has started, set the OBJ.APT. switch to the DEGAS side, wait for one hour, and then set the switch to the HEAT side. The purpose of this step is to maintain the aperture at a temperature higher than the normal operating temperature in order to cause any adsorbed gas to be released.

Aperture Cleaning Method

When using the SEM at a low accelerating voltage and a high magnification (e.g., 1 kV, 20,000 or higher), the aperture should be sputter-coated with materials such as Pt-Pd or Au-Pd after baking.

8.4.2 Starting the DISPLAY

1. Confirm that the EO CONTROL switch is at the 1 position. Set the DISPLAY switch to the 1 position (in normal operations, it is not necessary to set the EO CONTROL switch to the 0 position), and press the PC power supply switch to turn on the PC. (This step may be skipped in the case of a system in which the power for the PC is interlocked with the DISPLAY switch.)
2. Selecting the normal mode on the Boot Selection Screen causes a login screen to be displayed. When this happens, press the Ctrl + Alt + Delete keys simultaneously. When a login name and a password have been entered, Windows NT is started.
3. Clicking on the S-5200 icon (which is automatically launched if it is registered in the [Start Menu]) causes a login dialog window for the S-5200 to be displayed. Enter your login name and the password, and click on OK. The SEM operation screen appears.

8.4.3 Filling the Liquid Nitrogen Trap

For observation conditions that are susceptible to the effects of specimen contamination (due to hydrocarbons), such as high-magnification observations and low accelerating voltage observations, an optional anti-contamination trap should be used. If the system is equipped with an (optional) anti-contamination trap, fill the trap dewar with liquid nitrogen. The trap chilled by liquid nitrogen absorbs the gas surrounding the specimen and thus prevents any contamination of the specimen. The capacity of the trap dewar is approximately 0.9 liter. Filling the trap for the first time may require approximately 1.3 liters of liquid nitrogen. At a 24ºC room temperature, the trap, once filled, can last approximately five hours.

NOTE: When transferring liquid nitrogen into the trap, set a special funnel on the inlet. Be sure to wear leather gloves and protective goggles. To prevent frost-bite, do not let your skin come into direct contact with the liquid nitrogen. To prevent oxygen deficiency, be sure that the environment in which the liquid nitrogen is handled has adequate ventilation.

NOTE: When the anti-contamination trap has been filled with liquid nitrogen, do not let the specimen chamber leak (bringing it into the atmospheric pressure). Leakage can cause the formation of frost on the anti-contamination trap, creating vacuum deterioration. Before letting the specimen chamber leak, empty out any liquid nitrogen and wait for a few hours. The cold trap itself is unaffected by the introduction of air into the specimen chamber even if some liquid nitrogen remains in the trap.

8.5 System Halt

8.5.1 Standard Shutdown

1. Shut down the DISPLAY
   1) Shut down the accelerating voltage.
   2) Return the specimen holder to the “Home Position”.
   3) Close the SEM screen.
   4) Shut down the PC.
   5) Turn off the DISPLAY switch.
2. Set the S.C. AIR LOCK VALVE switch on the evacuation panel to the CLOSE position.
3. Pull out the specimen holder to the specimen exchange chamber (the pre-evacuation position).
4. Set the EVAC POWER switch to the 0 (OFF) position.

   NOTE: The timer (TMP stop time: 5 minutes) operates, after which the power for the evacuation system shuts off.

   NOTE: If the OBJ.APT HEAT/DEGAS mode is on, the HEAT/DEGAS lamp flashes, and the timer (heater cool-off time: 30 minutes) operates, after which the TMP stop timer sets in.
5. Set the IP-1, IP-2, and IP-3 switches for the ION PUMP POWER (the evacuation operation panel) to the OFF position.
6. Set the MAIN breaker for the power unit to the OFF position.
7. Set the power breaker on the power distribution panel to the OFF position to shut off the power supply.
8. Turn off the cooling water.

8.5.2 Emergency Shutdown

If an emergency shutdown is needed for some reason, perform the following procedures to shut the system down:

1. Press the emergency shutdown switch on the evacuation operation panel or the power supply unit.

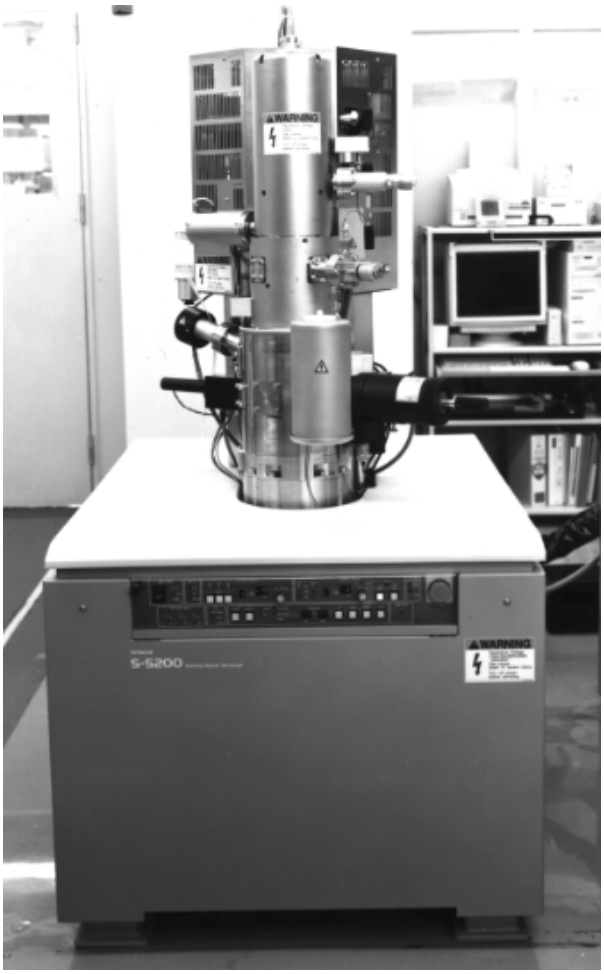

Column Unit Evacuation Control Panel

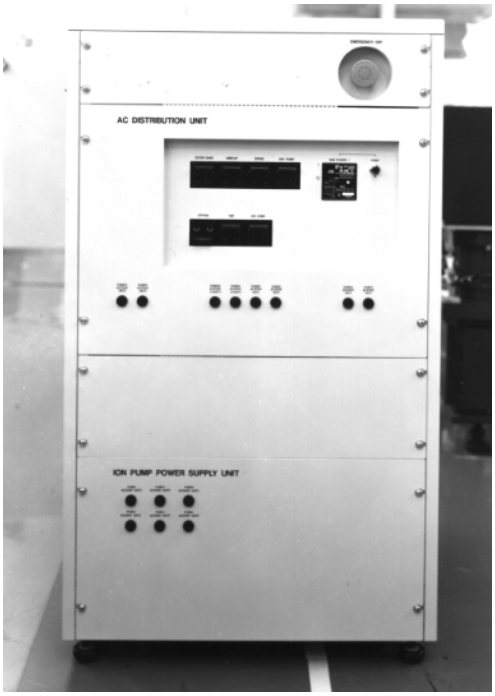

Power Supply Unit

Figure 8-31: Location of the Emergency Shutdown Switches

2. Set the MAIN breaker on the power supply unit to the OFF position.
3. Set the power breaker on the power distribution panel to the OFF position to shut off the power supply.
4. Turn off the cooling water.

8.6 Starting the System

8.6.1 Standard Startup

1. Turn on the cooling water.
2. Set the power supply breaker on the power distribution panel to the ON position.
3. Push in the power leak shutoff indicator button (white) on the MAIN breaker for the power supply unit. While holding the POWER ON switch down, set the MAIN breaker to the ON position.
4. Set the IP-1, IP-2, and IP-3 switches for the ION PUMP POWER on the evacuation operation panel to the ON position.
5. If the IP-1, IP-2, and IP-3 fail to start in Step 4, press the RESET switch for the IP-1, IP-2, and IP-3 on the evacuation operation panel for a few seconds. This should start the IP-1, IP-2, and IP-3.
6. Conduct baking if the vacuum levels of IP1, IP2, and IP3 fail to reach the following levels:

   IP1: $2x10^{-7}$ Pa

   IP2: $2x10^{-6}$ Pa

   IP3: $7x10^{-5}$ Pa
7. Confirm that the specimen holder is in the specimen exchange chamber (at the pre-evacuation position).
8. Confirm that the OBJ.APT switch on the evacuation operation panel is at the OFF position.
9. Set the EVAC POWER switch on the evacuation operation panel to the 0 ON position.
10. If the S.C. LOCK switch is not on the LOCK side, set it to the LOCK side.

8.6.2 Starting the system after an emergency shutdown

1. Confirm that that system is in the normal operating condition. Turn the emergency shutdown switch in the direction indicated in **Figure 8-32** to reset the switch to its original position.

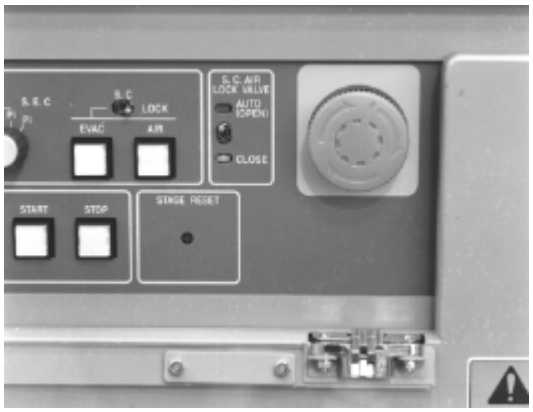

Figure 8-32: Resetting the Emergency Shutdown Switch

2. Turn on the cooling water.

3. Set the power supply breaker on the power distribution panel to the ON position.
4. Push in the power leak shutoff indicator button (white) on the MAIN breaker for the power supply unit. While holding the POWER ON switch down, set the MAIN breaker to the ON position.
5. Set the IP-1, IP-2, and IP-3 switches for the ION PUMP POWER on the evacuation operation panel to the ON position.
6. The IP-1, IP-2, and IP-3 fail to start in Step 4, press the RESET switch for the IP-1, IP-2, and IP-3 on the evacuation operation panel for a few seconds. This should start the IP-1, IP-2, and IP-3.
7. Conduct baking if the vacuum levels of IP1, IP2, and IP3 fail to reach the following levels:

   IP1: $2x10^{-7}$ Pa

   IP2: $2x10^{-6}$ Pa

   IP3: $7x10^{-5}$ Pa
8. Confirm that the specimen holder is in the specimen exchange chamber (at the pre-evacuation position).
9. Confirm that the OBJ.APT switch on the evacuation operation panel is at the OFF position.
10. Set the EVAC POWER switch on the evacuation operation panel to the 0 ON position.

    NOTE: The system will not start if the EVAC POWER switch is at the 0 ON position. If the EVAC POWER switch is at the 0 ON position, set it to the OFF position, and then set it again to the 0 ON position.
11. If the S.C. LOCK switch is not on the LOCK side, set it to the LOCK side.

8.7 Troubleshooting

8.7.1 Error Code

Code	Cause	Status	Countermeasure
E 01	Failure on the DC power supply (+24 V)	Evacuation system will stop.	Pull out the specimen holder to the entrance of the specimen exchange chamber, and turn the EVAC POWER switch off. Then, turn it on again. If the error occurs again, contact a service engineer.
E 03	Over heating of a transformer in the power supply (the temperature sensor is an optional accessory)	Evacuation system will stop.	Pull out the specimen holder to the entrance of the specimen exchange chamber, and turn the EVAC POWER switch off. Wait for about 30 min, and check the cooling water supply. Then, turn the EVAC POWER on. If the error occurs again, contact a service engineer.
E 04	Over heating of the dry pump (the temperature sensor is an optional accessory)	Evacuation system will stop.	Pull out the specimen holder to the entrance of the specimen exchange chamber, and turn the EVAC POWER switch off. Wait for about 30 min. Then, turn the EVAC POWER on. If the error occurs again, contact a service engineer.
E 05	The dry pump stopped.	Evacuation system will stop.	Pull out the specimen holder to the entrance of the specimen exchange chamber, and turn the EVAC POWER switch off. Check if the dry pump circuit breakers are on. Wait until the turbo molecular pump stops. Then, turn the EVAC POWER on. If the error occurs again, contact a service engineer.
E 06	Blown out the fuse connecting to the penning gauge unit.	Evacuation system will stop.	Pull out the specimen holder to the pre-pumping position, and turn the EVAC POWER switch off. Then, replace the fuse and turn the EVAC POWER switch on again. If the error occurs again, contact a service engineer.
E 07	The turbo molecular pump stopped. (TMP-2) (The turbo molecular pump of 50 liter/second is an optional accessory)	Evacuation system will stop.	Turn the EVAC POWER switch off. Wait until the turbo molecular pump stops. Then, turn the EVAC POWER on. If the error occurs again, contact a service engineer.
E 08	The turbo molecular pump stopped. (TMP-1)	Evacuation system will stop.	Turn the EVAC POWER switch off. Wait until the turbo molecular pump stops. Then, turn the EVAC POWER on. If the error occurs again, contact a service engineer.
E 12	Flow of the cooling water is larger than specified rate. (The water lamp blinking)	The evacuation system will be working normally. The cooling water is used for cooling the objective lens.	Check the cooling water supply. The Water lamp is lit when water is supplied.

Code	Cause	Status	Countermeasure
E 13	Flow of the cooling water is smaller than specified rate. (The water lamp goes out)	The evacuation system will be working normally. The cooling water is used for cooling the objective lens. Objective lens current will be shut off.	Check the cooling water supply. The Water lamp is lit when water is supplied.
E 14	Insufficient air pressure for the pneumatic valves.	The Air lamp on the evacuation control panel will be off. The power of the turbo molecular pumps will be shut off.	When the system is using an air compressor, check its power supply and pressure. When using house air, check the source of the air pressure. The system will recover when the air recovers at specific pressure.
E 17	S.E.C.AIR switch is on when the specimen holder is in the specimen chamber.	All valves are closed.	Pull out the specimen holder to the entrance of the specimen exchange chamber. Or set to EVAC the EVAC/AIR switch on the specimen exchange chamber.
E 18	S.C. LOCK switch on the evacuation control panel is released when the specimen holder is in the specimen chamber	Alarm buzzer only.	Pull out the specimen holder to the entrance of the specimen exchange chamber. Or set to LOCK the S.C. LOCK switch on the evacuation control panel.
E 19	The specimen holder is not at the entrance of the specimen exchange chamber when EVAC process was started.	The evacuation system will not be working normally.	Pull out the specimen holder to the entrance of the specimen exchange chamber.
E 20	S.C. LOCK switch on the evacuation control panel is set to LOCK when the specimen chamber is in the air leak process.	Alarm buzzer only.	Release the S.C. LOCK switch on the evacuation control panel until air leak is completed.
E 25	EVAC power is on when the specimen holder is out the specimen chamber.	The evacuation system will not be off.	Insert the specimen holder to the entrance of the specimen exchange chamber.
E 31	Gun baking was started while the HV cable head is not removed.	Gun baking power supply is shut off.	Press the Baking stop switch. Remove the HV cable from the electron gun and insert it to the HV cable holder at the side of the display unit. And then start gun baking again.
E 32	Covers around the electron gun are not attached.	Gun baking power supply is shut off.	Press the Baking stop switch. Attach covers to the electron gun part. And then start gun baking again.
E 33	Over heating of baking heaters. (when optional temperature sensor is installed)	Baking power supply will be shut off.	Stop gun baking. Contact a service engineer.

Code	Cause	Status	Countermeasure
E 34	Ion pump 1 power supply is shut off while gun baking. The gun baking may cause deterioration of gun vacuum and in some cases ion pump power supply will be shut off.	Baking power supply will be shut off.	Stop gun baking. Wait for a few hours. Restart ion pumps. And then, start gun baking again.
E 35	Ion pump 1 vacuum degraded.	When vacuum of the ion pump 1 degraded to lower than the specified value, baking power supply will be stopped.	Stop gun baking. Wait for a few hours. Restart ion pumps. And then, start gun baking again.
E 36	Cover around the trap heat is not attached. (the trap heat is an optional accessory)	Trap heat power supply is shut off.	Press the Trap Heat stop switch. Attach covers to the trap heat part. And then start trap heat again.
E 37	Gun baking was started while the ECO mode is carrying out.	Baking power supply will be shut off.	Stop gun baking. Wait for a few hours. Restart ion pumps. And then, start gun baking again.
E 38	Baking timer is not correct. (Condition INNER TIME > OUTER TIME + 2)	Baking power supply will be shut off.	Press the Baking stop switch. Set the baking timer correctly, and then start gun baking again.
E 51	Failure of the PI1		Contact a service engineer.
E 52	Failure of the PI2		Contact a service engineer.
E 97	EVAC power is off when the specimen holder is in the specimen chamber.	The evacuation system will not be off.	Pull out the specimen holder to the entrance of the specimen exchange chamber.
E 99	Error of ECO mode caused by: 1. EVAC power off 2. The specimen holder is in the specimen chamber. 3. While the baking is carrying out. 4. SEC EVAC/AIR switch is set to AIR. 5. Timer setting is failed	ECO mode will not start.	Settle the problem, and then start ECO mode

9 Adjustments

9.1 Adjustment Overview

Prior to being shipped, the S-5200 is adjusted so that it can be used in optimal conditions. Because the adjustments are made using special tools and measurement devices, if the need for further adjustments arises, please adjust only the affected part.

9.2 Tolerances

9.2.1 Evacuation System Specifications

Ultimate Vacuum

Specimen Chamber	6×10^{-5} Pa max. (Reference Value)
IP-1	5×10^{-8} Pa max.
IP-2	5×10^{-7} Pa max.
IP-3	5×10^{-5} Pa max.

Checking the Evacuation of the Specimen Chamber

- When the EVAC LOCK switch for the S.C. is in the LOCK position (right), the specimen chamber should never leak even when the AIR button is pressed.
- Even when the EVAC LOCK switch for the S.C. is on the left side, the specimen chamber should not leak when the AIR button is pressed momentarily. Leaking should occur only after the AIR button is pressed for at least two seconds.
- The specimen chamber should leak only when the specimen holder is pulled out (when the specimen exchange chamber is in a leak-enabled state). The specimen chamber should not leak when the holder is in any other position.
- The AIR, LOW, and HIGH lamps should not come on simultaneously.
- The AUTO (OPEN) – CLOSE lamp for the S.C. AIR LOCK VALVE switch should come on and blink without any problems.

Checking the Evacuation of the Specimen Exchange Chamber

Specimen Exchange Chamber Evacuation time (ESDP12)

For the specimen exchange chamber, the EVAC lamp should light up within 15 seconds of evacuation from the atmospheric pressure.

Anti-rotation Solenoid Stopper Operation for the Specimen Holder (Miss-operation Interlock)

- The insertion of the specimen holder when the specimen exchange chamber is at the atmospheric pressure should never cause the specimen holder to rotate under the AIR condition.
- The stopper should operate in 20-45 seconds after the specimen exchange chamber is evacuated and the EVAC lamp flashes (the EVAC lamp remains continuously lit).
- The specimen holder can move from the specimen exchange chamber to the specimen chamber only when the EVAC lamp for the specimen exchange chamber is flashing. (When the EVAC lamp remains lit, the specimen holder should not be insertable into the specimen chamber.)

Checking the Evacuation

- The EVAC-AIR switch should operate normally and the EVAC-AIR lamp should be lit normally.
- The AUTO (OPEN) side lamp should flash only when the S.C. AIR LOCK VALVE switch is on the Close side ad the specimen holder is inserted into the specimen chamber.
- When the specimen holder is inserted into the specimen chamber, setting the EVAC-AIR switch to the AIR position should never cause the specimen exchange chamber to leak.
- The specimen exchange chamber should AIR-leak only when the specimen holder is withdrawn and is in the specimen exchange position.

9.2.2 Micro-motion Specifications

See the "**Specimen Micro-motion Test**" section of **9.3.4**.

9.2.3 Electronic Engineering Specifications

Accelerating Voltage

- The system should permit the application of an accelerating voltage corresponding to the Sample Height mode.

Sample Height Mode	Applicable Accelerating Voltage Range
+2.0	0.5 ~ 5 kV
+1.5	0.5 ~ 10 kV
+1.0	0.5 ~ 25 kV
+0.5 ~ -1.5	0.5 ~ 30 kV

- When the Accelerating voltage is applied, the HV indicator lamp located in the column unit should come on.

Flashing

- Flashing should be actuated when the Flashing → Execute sequence on the HV Control is executed. The flashing operation should be cancelable.
- The flashing intensity should be displayed in the emission indicator.
- INT (intensity) should be set using the Column SetUp option (INT2 is normally used).
- Check the flashing intensities.

  Flashing intensity: 1 ⇨ Specification: 0 ~ 10 μA
  Flashing intensity: 2 ⇨ Specification: 30 ~ 40 μA
  Flashing intensity: 3 ⇨ Specification: 40 ~ 50 μA

Axis Adjustment

- The Gun axis and the condenser lens axis should be smoothly adjustable.
- The BM and the objective movable aperture should be smoothly adjustable.
- The electromagnetic alignment operation should work at the full accelerating voltage and in various modes.
- During the beam alignment, the aperture shadow should be round.
- Astigmatism should be corrected at the full accelerating voltage and in various modes.
- The alignment knob and image motions should behave appropriately as follows:

[Conditions]: Sample Height: 0.0 mm
Probe Current mode: Normal mode
C1 No.: 5
RR=0º

	X Knob turned Clockwise		Y Knob turned Clockwise	
	Cursor Motion	**Image Motion**	**Cursor Motion**	**Image Motion**
	(RR Off)		**(RR Off)**	
Beam Alignment	→	→	↑	↑
LM Position	→	→	↑	↑

NOTE: The motion is reversed when a knob is turned counterclockwise.

Beam Monitor

- The signal should switch to the BM movable aperture at an accelerating voltage of 7.4 kV or less, and to the Objective movable aperture at 7.5 kV or greater.
- When the emission increases or decreases and deviates from the safe region, the Beam Monit. lamp (red) on the Scanning Image window should flash. When the Adjust switch is pressed, the BMC should operate and the lamp (green) should come on.
- When the accelerating voltage ≥ 10 KV, the beam monitor should turn off when the Adjust switch is pressed.

AFC, AST, ABC

- The Auto Focus (AFC) should operate normally.
- The Auto Stigma (AST) should operate normally.
- The Auto Brightness Contrast Control (ABCC) should operate normally.

Baking

- The Baking Heater terminal should be covered.
- The INNER/OUTER BAKE timer should operate normally.

- The INNER BAKE HEATER should operate normally.
- The INNER BAKE should have an AC 70V±10% power supply.

Name Plate

- The main unit has the correct name plate and lot number.
- Products intended for export should have patent plate attached.
- Products to be shipped to NSA should have FCC labels attached.
- The VRT side connector in the Display must be removed and a “Service Only” label must be affixed.

Other

- In all modes, no shade should be generated at the lowest magnification rate.
- Switching the SE Detectors (SE, BSE, Mix) should not cause a problem (BSE is optional).
- The TMP, WATER, and AIR PRESS lamps should light up normally.
- The TMP lamp and the TMP controller should display normally.
- The evacuation sequence should be manually operable.
- When switched to IP-1, 2, or 3, the IP vacuum meter should operate normally.
- When the specimen exchange chamber is switched from EVAC to AIR, the PE meter should operate normally.
- When the vacuum level in the specimen chamber declines, the high-pressure OFF indicator should come on.
- Cautions on specimen exchange should be provided on the name plate.
- Exchange of specimens (specimen holder in/out operations) should occur smoothly.
- When the main valve is manually closed, the compressor should not start in less than 2 hours.
- Check the heater objective aperture (Specifications: Heat: 12V±10%, Degas: 13.2V±10%).
- The menus and icons should operate normally.
- The magnetic field canceller should operate normally.
- The voltage applied to the electrodes (Vse1, Vse2) in the objective lens unit should be within the normal range:

  Vse1: -200 V ~ 0 V, +100 V
  Vse2: 0 V, +50 V

- The maximum Ie setting in the HV Control should be at 20 μA.
- There should be no leakage of the cooling water for the objective lens.

Focus (Relative to Sample Height and Accelerating Voltage)

Relative to Accelerating Voltage

[Conditions]: Sample Height: 0.0 mm
Probe Current mode: Normal mode
C1 No.: 5

[Procedures]: Read off Focus indicator values under accelerating voltages of 0.8 kV, 5 kV, and 30 kV.

[Specification]: The difference between the maximum and minimum measured Focus values should be within 0.1 mm.

Relative to Sample Height

[Conditions]: Accelerating voltage: 5 kV
Probe Current mode: Normal mode
C1 No.: 5

[Procedures]: Read off Focus indicator values under sample heights +2.0, 0.0, and -1.5 mm.

[Specification]: The difference between the maximum and minimum measured Focus values should be within 0.1 mm.

Magnification (High Mag)

Reference magnification

[Conditions]: Accelerating voltage: 5 kV
Sample Height: 0.0 mm
Probe Current mode: Normal mode
C1 No.: 5
Magnification: 20 k
Specimen: Measure micro-scale 10 pitch (2.4 μm).

[Specification]: Magnification accuracy ≤±5% (2.28 μm ~ 2.52 μm)

Relative to Probe Current Mode

[Conditions]: Accelerating voltage: 5 kV
Sample Height: 0.0 mm
C1 No.: 5
Magnification: 20 k
Specimen: Measure microscale 10 pitch (2.4 μm).
Scanning speed: Slow3
Probe Current mode: Analysis mode

[Specification]: Magnification accuracy ≤±5% (2.28 μm ~ 2.52 μm)

Relative to Accelerating Voltage

[Conditions]: Sample Height: 0.0 mm
Probe Current mode: Normal mode
C1 No.: 5
Magnification: 20 k

Specimen: Measure micro-scale 10 pitch (2.4 μm).
Scanning speed: Slow3
Accelerating voltage: 0.5 kV, 1 kV, 5 kV, 15 kV, 30 kV

[Specification]: 0.5 ~ 4 kV ≤ ±10% (2.16 μm ~ 2.64 μm)
5 ~ 30 kV ≤ ±10% (2.28 μm ~ 2.52 μm)

Relative to Cond1 No.

[Conditions]: Sample Height: 0.0 mm
Probe Current mode: Normal mode
Magnification: 20 k
Specimen: Measure micro-scale 10 pitch (2.4 μm).
Scanning speed: Slow3
C1 No.: 1, 16
Accelerating voltage: 1, 5, 30 kV

[Specification]: ≤ ±10% (2.16 μm ~ 2.64 μm)

Relative to Sample Height Mode

[Conditions]: Probe Current mode: Normal mode
C1 No.: 5
Magnification: 20 k
Specimen: Measure micro-scale 10 pitch (2.4 μm).
Scanning speed: Slow3
Accelerating voltage, Sample Height mode: See the table below:

HV	Sample Height Mode	
1 kV	+2.0	-1.5
5 kV	+2.0	-1.5
30 kV	+0.5	-1.5

[Specification]: ≤ ±10% (2.16 μm ~ 2.64 μm)

Magnification (Low Mag)

Reference Magnification

[Conditions]: Accelerating voltage: 5 kV
Sample Height: 0.0 mm
Probe Current mode: Normal mode
C1 No.: 5
Magnification: 1000
Specimen: Measure mesh 2 pitch (50.8 μm).
LM Mode Select: Normal

[Specification]: Magnification accuracy ≤ ±5 % (48.26 μm ~ 53.34 μm)

Relative to LM Mode Select

[Conditions]: Accelerating voltage: 5 kV
Sample Height: 0.0 mm
Probe Current mode: Normal mode
C1 No.: 5
Magnification: 1000
Specimen: Measure mesh 2 pitch (50.8 μm).
Scanning speed: Slow3
LM Mode Select: Wide/X-Ray

[Specification]: Magnification accuracy ≤ ±5 % (48.26 μm ~ 53.34 μm)

Relative to Accelerating Voltage

[Conditions]: Sample Height: 0.0 mm
Probe Current mode: Normal mode
C1 No.: 5
Magnification: 1000
Specimen: Measure mesh 2 pitch (50.8 μm).
Scanning speed: Slow3
LM Mode Select: Normal
Accelerating voltage: 0.5 kV, 1 kV, 5 kV, 15 kV, 30 kV

[Specification]: 0.5 ~ 4 kV ≤ ±10 % (45.72 μm ~ 55.88 μm)
5 ~ 30 kV ≤ ±5 % (48.26 μm ~ 53.34 μm)

Relative to Sample Height Mode

[Conditions]: Probe Current mode: Normal mode
C1 No.: 5
Magnification: 1000
Specimen: Measure mesh 2 pitch (50.8 μm).
Scanning speed: Slow3
Accelerating voltage, Sample Height mode: See the table below:

HV	Sample Height mode	
0.5 kV	+2.0	-0.5
1 kV	+2.0	-1.5
5 kV	+2.0	-1.5
30 kV	+0.5	-1.5

[Specification]: ≤ ±10 % (45.72 μm ~ 55.88 μm)

Split/Dual MAG

Magnification Ratio

[Conditions]: Accelerating voltage: 5 kV
Sample Height: 0.0 mm
Magnification: 1300 (x 1)
Specimen: Mesh
Scanning speed: Slow1

[Specifications]: x 5: Magnification ratio ≤ ±5 % [x (5 ± 0.25)]
x 10: Magnification ratio ≤ ±10 % [x (10 ± 0.5)]

Misalignment of Masks and High Magnification Images

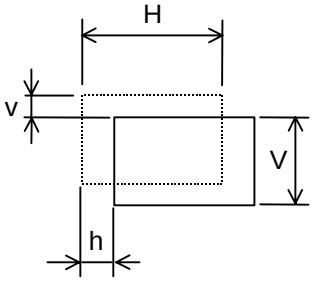

[Specifications]: For both x5 and x10:
v/V ≤ 20 %
h/H ≤ 20 %

Current Center

Measuring the Normal Mode

[Conditions]: Accelerating voltage: 5 kV
Sample Height: 0.0 mm
Probe Current mode: Normal mode
Magnification: 5000

[Procedure]: Adjust the axis (electromagnetic) at C1:5. Measure image shifts at C1: 5→1, 5→16.

[Specification]: < 5 μm

Measuring the Analysis Mode

[Conditions]: Accelerating voltage: 5 kV
Sample Height: 0.0 mm
Probe Current mode: Normal mode
Magnification: 5000

[Procedure]: Adjust the axis (electromagnetic) at C1: 5. Measure image shifts at C1: 5→1, 5→ 16.

[Specifications]: < 5 μm

Compatibility between Normal Mode and Analysis Mode Images

[Conditions]: Accelerating voltage: 5 kV
Sample Height: 0.0 mm
Magnification: 5000

[Procedures]:
1. In the Normal and Analysis modes, adjust the axis (electromagnetic) at C1: 5 and adjust the image (astigmatism, focus), respectively.
2. Measure the image shift when the Normal mode is switched to the Analysis mode (focus and perform astigmatism adjustments in each mode).

[Specifications]: < 10 μm

Voltage Center

[Conditions]: Accelerating voltages: 15 kV, 5 kV, 30 kV
Sample Height: 0.0 mm
Magnification]: 5000

[Procedures]:
1. Perform electromagnetic alignments under accelerating voltages 15 kV, 5 kV, and 30 kV
2. Measure image shifts when the Accelerating voltage is changed from 15 kV to 5 kV, and from 15 kV to 30 kV.

[Specifications]: < 15 μm

Magnification Center

[Condition]: Accelerating voltage: 5 kV
Sample Height: 0.0 mm
Magnification: 1500

[Specifications]: Slow scanning: within a 10 mm diameter from the center of the SEM screen
TV scanning: within a 10 mm diameter from the center of the SEM screen

Image Shift

Between Scanning Speeds

[Conditions]: Accelerating voltage: 5 kV
Sample Height: 0.0 mm
Probe Current mode: Normal mode
C1 No.: 5
Magnification: 1500

[Procedures]: Measure the shift based on Slow-3 as a reference.

[Specifications]:

	Left side	Center	Right side
Slow-1	< 1.0 mm	< 0.5 mm	< 1.0 mm
Slow-2	< 0.5 mm	< 0.5 mm	< 0.5 mm
Slow-3	< 0.5 mm	< 0.5 mm	< 0.5 mm

Between TV-1 and Slow1

[Conditions]: Accelerating voltage: 5 kV
Sample Height: 0.0 mm
Probe Current mode: Normal mode
C1 No.: 5
Magnification: 5000

[Procedures]: Measure the shift based on Slow-3 as a reference.

[Specifications]:

	Left side	Center	Right side
X direction	< 3.0 mm	< 2.0 mm	< 3.0 mm
Y direction	< 3.0 mm	< 2.0 mm	< 3.0 mm

Line Analysis

[Conditions]: Accelerating voltage: 5 kV
Sample Height: 0.0 mm
Probe Current mode: Normal mode
C1 No.: 5
Magnification: 1500

[Procedures]: X direction: Measure any shift between the image and the waveform.
Y direction: Measure the position shift in the Y direction. (Use a line set to align the image flush with the mesh, and determine the position using a line profile).

[Specifications]: X direction: In all scanning speeds: < 1.0 mm
Y direction: ≤ 1.0 mm

Power Supply Frequency

[Procedures]: Products to be shipped to regions where the power supply frequency is 60 Hz, modify the products for 60 Hz compliance, and then take pictures of them.

[Specifications]: No Data Display deviations

Image Shift

Image Shift/RISM Accuracy (a shift 70-100% of the maximum shift)

- Relative to Accelerating Voltage
  [Conditions]: Sample height: 0.0 mm (Focus: 0.0 mm)
  Accelerating voltage: 1 kV, 5 kV, 30 kV
  [Specifications]: ± (4.5 μm ± 0.45 μm) max.
- Relative to Sample Height Mode
  [Conditions]: Accelerating voltage: 5 kV
  Sample height: +2.0, -1.5 mm (Focus: 0.0 mm)
  [Specifications]: Sample Height Shift
  +2.0 ± (2.0 μm ± 0.2 μm) max.
  -1.5 ± (7.0 μm ± 0.7 μm) max.

Direction of Image Shifting

[Specifications]: Appropriate movements of the image shift knob and the image are as follows:

	Clockwise turn of X Knob		Clockwise turn of Y Knob	
	Cursor Movement (RR Off)	Image Movement	Cursor Movement (RR Off)	Image Movement
Image Shift	→	→	↑	↑

NOTE: When the knobs are turned counterclockwise, the motions are reversed.

Shift Direction Misalignment

[Specifications]: ≤ ±5º

Orthogonality

Orthogonality under Adjustment Conditions (HM/LM)

[Conditions]: Accelerating voltage: 5 kV
Sample Height: 0.0 mm
Probe Current mode: Normal mode
C1 No.: 5
Specimen: Mesh

[Specifications]: Both HM, LM ≤ ±0.5º

Orthogonality under Other Conditions

- High Mag Mode
  [Conditions]: Accelerating voltage: 1, 5, 30 kV
  Sample height: +2.0, 0.0, -1.5 mm
  Specimen: Mesh
  [Specifications]: ≤ ±2º
- Low Mag Mode
  [Conditions]: Accelerating voltage: 1, 5, 30 kV
  Sample height: 0.0 mm
  Specimen: Mesh
  [Specifications]: ≤ ±2º

Image Rotation Correction

High Mag Mode

[Conditions]: Accelerating voltage: 1, 5, 30 kV
Sample height: +2.0, 0.0, -1.5 mm

[Specifications]: ≤ ±5º based on an accelerating voltage of 5 kV and a sample height of 0.0

Low Mag Mode (between Accelerating Voltage and Sample Height)

[Conditions]: Accelerating voltage: 1, 5, 30 kV
Sample height: +2.0, 0.0, -1.5 mm
LM Mode Select: Normal

[Specifications]: ≤ ±5º based on High Mag, when High Mag is switched to Low Mag

Low Mag Mode (between LM Mode Selects)

[Conditions]: Accelerating voltage: 5 kV
Sample height: 0.0 mm
LM Mode Select: Normal, Wide, X-ray

[Specifications]: ≤ ±5º based on High Mag, when High Mag is switched to Low Mag

Raster Rotation Function

- ◁ ▷: 0.1º; 1º over scrollbar; freely variable on the scrollbar track; numeric value input
- No image rotation at a rotational angle of 0º
- Image rotation magnification ratio

  [Conditions]: Accelerating voltage: 5 kV
  Sample height: 0.0 mm
  Magnification: 2000
  R.R.: 0º, 90º

  [Specifications]: Magnification ratio ≤ 5 % for both X and Y
- Dynamic focus correctable at a maximum specimen tilting angle
- Verification of tilt compensation operation

  [Conditions]: Accelerating voltage: 5 kV
  Sample height: 0.0 mm
  Magnification: 1300
  Specimen tilt angle: 20º, 40º

  [Specifications]: Y correction ≤ 10%

Condition Memory

When any condition is saved, the following items are modified, and the previous condition is re-loaded, the Save and Load operations should work properly. (This can be verified by substantially shifting the alignment data and checking to see that they return to the original condition.)

- Accelerating Voltage
- Probe Current Mode
- SE Detector
- Low Pass/High Pass
- Brightness
- Stigma
- Stigma Alignment X
- Low Mag Wobble
- Emission Current
- C1 Notch
- Signal Mix Ratio
- Mag Mode
- Contrast
- Beam Alignment
- Sigma alignment Y
- Sample Height
- Focus Depth
- Signal Condition Number
- LM Mode Select
- Focus (Coarse/Fine)
- Aperture Alignment
- Low Mag Position

Performance

Guaranteed Resolution (30 kV)

[Conditions]: Accelerating voltage: 30 kV
Objective movable aperture: No. 2 or 3 (50 µm diameter)
Sample height: 0.5 mm
Probe Current mode: Normal mode
Magnification: 600 k
Specimen: Platinum sputtering particles on carbon
Image recording: Polaroid film, Capture image (1280 x 960)

[Specifications]: Resolution: 0.5 nm (limited sample)

Guaranteed Resolution (1 kV)

[Conditions]: Accelerating voltage: 1 kV
Objective movable aperture: No. 2 or 3 (50 µm diameter)
Sample height: 1.5 mm
Probe current mode: Normal mode
Magnification: 150 k
Specimen: Gold particles on carbon
Image recording: Polaroid film, Capture image (1280 x 960)

[Specifications]: Resolution: 1.8 nm resolution (limited sample)

Image Drift Measurement

[Conditions]: Accelerating voltage: 5 kV
Sample height: 0.0 mm
Probe Current mode: Normal mode

[Procedures]: Take measurements 1.5 hours after the display and the HV are turned on.

[Specifications]: Drift < 30 nm/10 minutes max.

Tip (Emission) Stability Measurement

[Conditions]: Accelerating voltage: 30 kV
Sample height: 0.5 mm
Probe current mode: Normal mode
Magnification: 600 k
Specimen: Platinum sputtering particles on carbon

[Procedures]: Record images on Capture (1280 x 960) 1 hour and 2 hours after flashing.

[Specifications]: See the limited sample.

Tip Rounding

[Procedures]: Apply an accelerating voltage of 15 kV (emission current: 10 μA) after flashing; re-set the emission current value 2 hours later.

[Specifications]: Extracting voltage < 5.3 kV
(The default flashing value should be in the 3.5 ~ 4.0 kV range when the system is shipped.)

9.3 Adjustment Procedures

9.3.1 Evacuation System Adjustment Procedures

Adjusting Pi-1 (Specimen Chamber)

1. Bring the specimen chamber to the atmospheric pressure.
2. Adjust the volume VR5 so that the voltage of TP12 will be 5.1 ± 0.1 [V].
3. Set the vacuum level display to S.C-Pi; confirm that the display shows 9×10^4.

Adjusting Pi-2

1. Bring the specimen chamber to the atmospheric pressure.
2. Adjust the volume VR6 so that the voltage of TP13 will be 5.1 ± 0.1 [V].
3. Set the vacuum level display to S.E.C-Pi; confirm that the display shows 9×10^4.

Adjusting Pe

1. Adjust the volume VR4 to a mid-point.

Adjusting IP1

1. Confirm that the switch for IP1 is OFF.
2. Adjust the volume VR3 so that the voltage of TP7 will be 0 ± 0.1 [V].
3. Adjust the volume VR1 so that the voltage of TP6 will be 0 ± 0.1 [V].
4. Set the vacuum level display to IP1; confirm that the display shows $- \times 10^{-}$ [Pa].
5. Turn the switch for IP1 ON.
6. Confirm that the IP1 LED comes on.
7. Confirm that the vacuum level display shows a normal value ($2 \times 10^{-8} \sim 2 \times 10^{-6}$ [Pa]).

Adjusting IP2

1. Confirm that the switch for IP2 is OFF.
2. Adjust the volume VR201 so that the voltage of TP200 will be 0 ± 0.1 [V].
3. Adjust the volume VR2 so that the voltage of TP9 will be 0 ± 0.1 [V].
4. Set the vacuum level display to IP2; confirm that the display shows – x 10^{--} [Pa].
5. Turn the switch for IP2 ON.
6. Confirm that the IP2 LED comes on.
7. Confirm that the vacuum level display shows a normal value (2 x 10^{-8} ~ 9 x 10^{-6} [Pa]).

Adjusting IP3

1. Confirm that the switch for IP3 is OFF.
2. Adjust the volume VR202 so that the voltage of TP201 will be 0 ± 0.1 [V].
3. Adjust the volume VR200 so that the voltage of TP10 will be 0 ± 0.1 [V].
4. Set the vacuum level display to IP3; confirm that the display shows – x 10^{--} [Pa].
5. Turn the switch for IP3 ON.
6. Confirm that the IP3 LED comes on.
7. Confirm that the vacuum level display shows a normal value (2 x 10^{-8} ~ 9 x 10^{-6} [Pa]).

Confirming the Ultimate Vacuum Level

Close the AV-1 valve. Perform checks three hours later.

Specimen chamber: 6 x 10^{-5} Pa or less
IP-3: 1 x 10^{-5} Pa or less
(When the S.C.AIR LOCK VALVE is opened, the vacuum level should not be worse than 1 x 10^{-5}.)
IP-2: 5 x 10^{-7} Pa or less
IP-1: 5 x 10^{-8} Pa or less

Checking the Evacuation in the Specimen Chamber

- When the EVAC Lock switch for the S.C. is in the LOCK position (right), the specimen chamber should never leak even when the AIR button is pressed.
- Even when the EVAC Lock switch for the S.C. is on the left side, the specimen chamber should not leak when the AIR button is pressed momentarily. Leaking should occur only after the AIR button is pressed for at least two seconds.
- The specimen chamber should leak only when the specimen holder is pulled out (when the specimen exchange chamber is in a leak-enabled state). The specimen chamber should not leak when the holder is in any other position.
- The AIR, LOW, and HIGH lamps should not come on simultaneously.
- The AUTO (OPEN) – CLOSE lamp for the S.C. AIR LOCK VALVE switch should come on and blink without any problems.

Checking the Evacuation of the Specimen Exchange Chamber

Specimen Exchange Chamber Evacuation Time (ESDP12)

For the specimen exchange chamber, the EVAC lamp should light up within 15 seconds of vacuum-evacuation from the atmospheric pressure.

Operation of the Anti-rotation Solenoid Stopper for the Specimen Holder (Mis-operation Interlock)

- The insertion of the specimen holder when the specimen exchange chamber is at the atmospheric pressure should never cause the specimen holder to rotate under the AIR condition.
- The stopper should operate in 20 - 45 seconds after the specimen exchange chamber is evacuated and the EVAC lamp flashes (the EVAC lamp remains continuously lit).
- The specimen holder can move from the specimen exchange chamber to the specimen chamber only when the EVAC lamp for the specimen exchange chamber is flashing. (When the EVAC lamp remains lit, the specimen holder should not be insertable into the specimen chamber.)

Checking the Evacuation

- The EVAC-AIR switch should operate normally and the EVAC-AIR lamp should be lit normally.
- The AUTO (OPEN) side lamp should flash only when the S.C. AIR LOCK VALVE switch is on the Closed side and the specimen holder is inserted into the specimen chamber.
- When the specimen holder is inserted into the specimen chamber, setting the EVAC-AIR switch to the AIR position should never cause the specimen exchange chamber to leak.
- The specimen exchange chamber should AIR-leak only when the specimen holder is withdrawn and is in the specimen exchange position.

9.3.2 Superimposer Adjustment Procedures

Preliminary Steps

- Jumper pins
  Short: J7
  Open: J3
- Confirming PC settings
  Open [Properties] on the screen. Confirm that the settings are at 1024*768, 75Hz, True Color. Verify that the power management function is disabled.

Chroma Key Adjustment

1. Start the SEM as SYSTEM-SEM.
2. Rotate the reference voltage adjustment VR2 for the chroma key comparator in the image display area. A SEM image appears in the image display area. Turning the VR2 right and left causes a noise to appear. Set the VR at an intermediate value. If a SEM image fails to appear, open the Adjustment window for the Superimposer, and provisionally set the chroma key to R = 80, G = 10, B = 80 (**Figure 9-2**).
3. When values higher or lower than the default value are entered, a noise appears. For chroma key settings, enter an intermediate value of those values.

Adjusting the Display Area

1. Use the Data Manager to open a previously created BMP file, 640 x 480 in size, and transfer it back to the image memory. For ease of adjustment, the BMP file should be one in which a box cursor is drawn on its outermost frame. On the Standard Mode screen, set the PLL division ratio for the Superimposer Adjustment window so that the width of the frame for the area in which the SEM image is displayed is closest to the width of the frame for the area that the Superimposer displays. For ease of adjustment, use the Windows application Paint to create a canvas substantially larger than 640 x 480, fill it with F = 128, G = 0, B = 128 colors, and display this area by superimposing it on the SEM Manager (**Figures 9-1**, **9-2**).
2. Adjust the Horizontal Start Offset for the IMP Register on the Superimposer Adjustment window so that the left edge of the frame in which the SEM image is displayed is coincident with the left edge of the area displayed by the Superimposer.
3. Adjust H-start and V-start of the IP register so that the box cursor is coincident with the SEM display area.

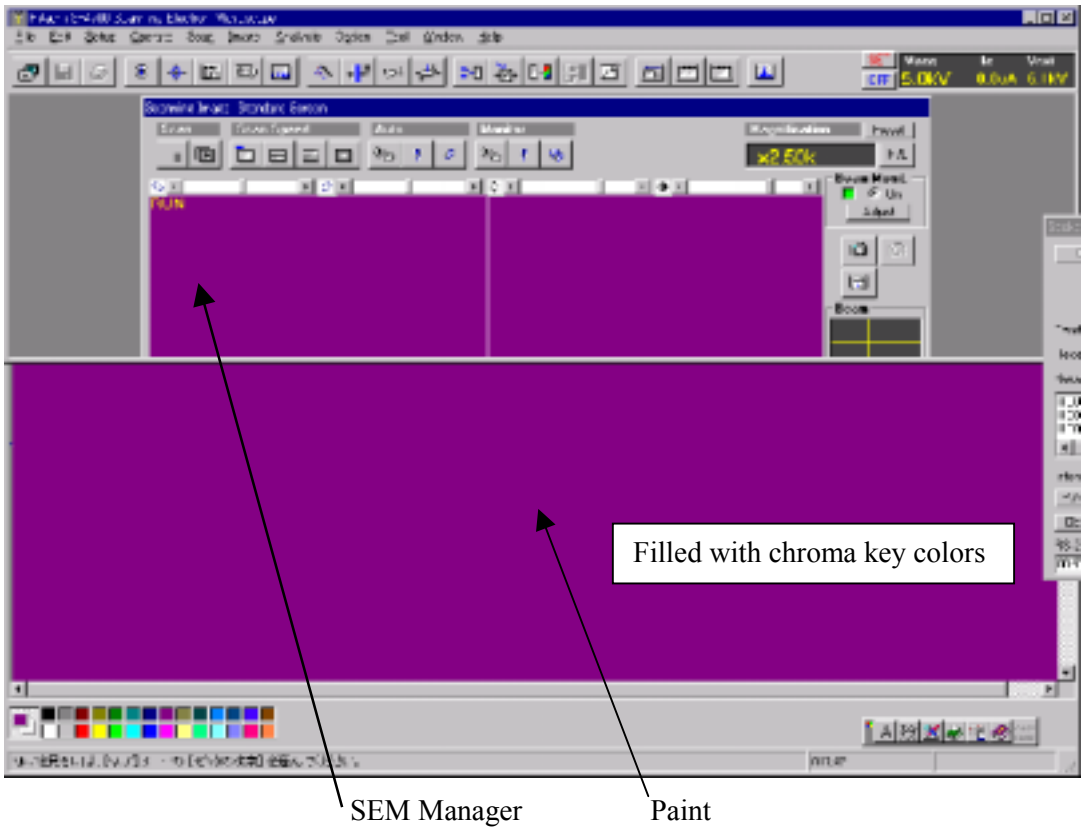

Figure 9-1: Chroma Key Adjustment

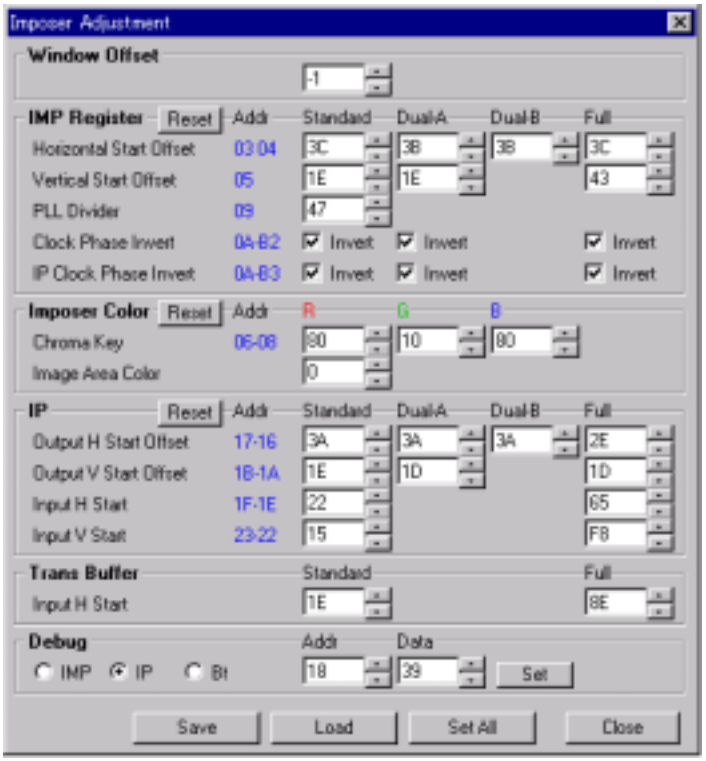

Figure 9-2: Imposer Adjustment Screen

4. If the noise extends to the vertical edge of the display area when the PLL division ratio is changed, turn the *Clock Phase Invert* and *IP Clock Phase Invert* checkboxes inside the adjustment window on and off. Confirm the waveform. Fix the phase adjustment so that the fall edges of *V-sync* and *H-sync* and the rise edge of *Clk* are not close to each other. **Figure 9-3** shows the phases of the H-sync fall edge and the Clk rise edge. In (a), the *Clock Phase Invert* is turned ON because of an inadequate amount of available margin.

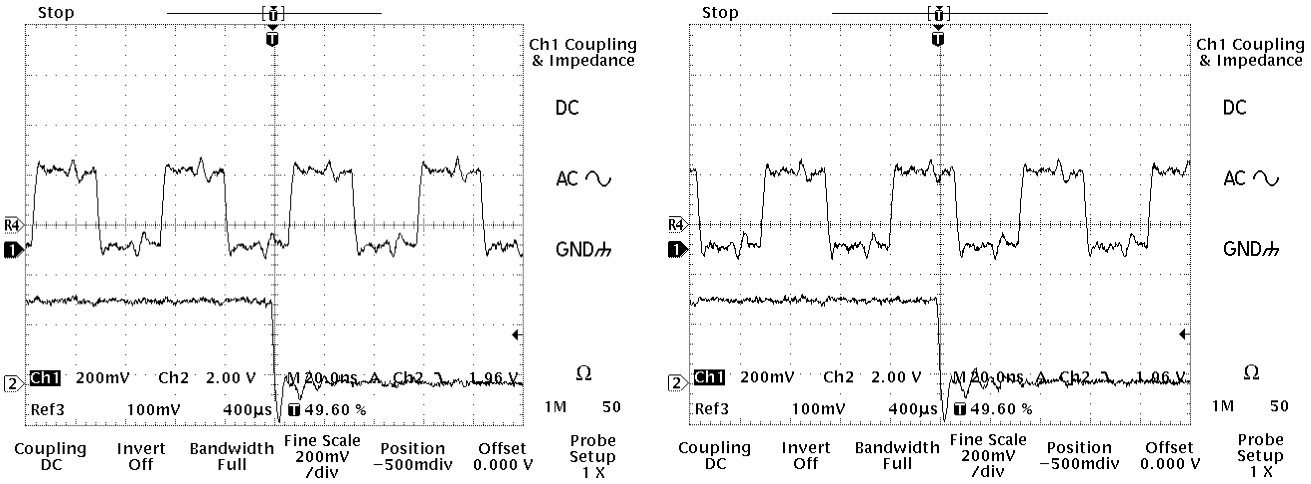

(a) No margin (b) Adequate margin

Figure 9-3: Phase Adjustment between Synchronization Signals and Clocks

Table 9-1 shows the signals to be checked and the places where adjustments are to be made.

Table 9-1: Phase Adjustments

Signals to be Checked		Adjustment Locations (Adjustment Window)	Remarks
Signal-1	**Signal-2**		
LD-CLK (TP2)	H-sync (TP1)	IP clock phase	Both H and V must be satisfied.
	V-sync (TP15)		
Count-CLK (TP3)	H-sync (TP1)	Clock phase	Both H and V must be satisfied.
	V-sync (TP15)		

5. After adjusting the phase, re-adjust the offset value on the adjustment window so that the display area matches the SEM display frame.
6. Adjust the value of Window Offset for the adjustment window between -2 and +2 so that the gap between the SEM display area and the area displayed by the Imposer will be smallest. Check by moving the screen from the left to the center to the right.
7. Save the adjusted value.

Phase Adjustment for GUI Video and Video Switch Signals

1. Using a simple method (coarse adjustment) and the SEM data entry function, enter vertical white lines and characters at any position on the screen. Adjust the phases of video signals and switch signals so that these characters will be white, rather than violet.

2. Following are the procedures for accurately adjusting the waveform levels.

NOTE: Because this adjustment is made before the system is shipped from the factory, it is normally not required. The following procedures are intended as a reference only.

Launch PAINT from Windows [Accessories]. On the full screen, completely paint the background color with the aforementioned chroma key data. In the next step, draw a vertical white line that is one pixel wide (**Figure 9-4**). After that, hide all toolbars.

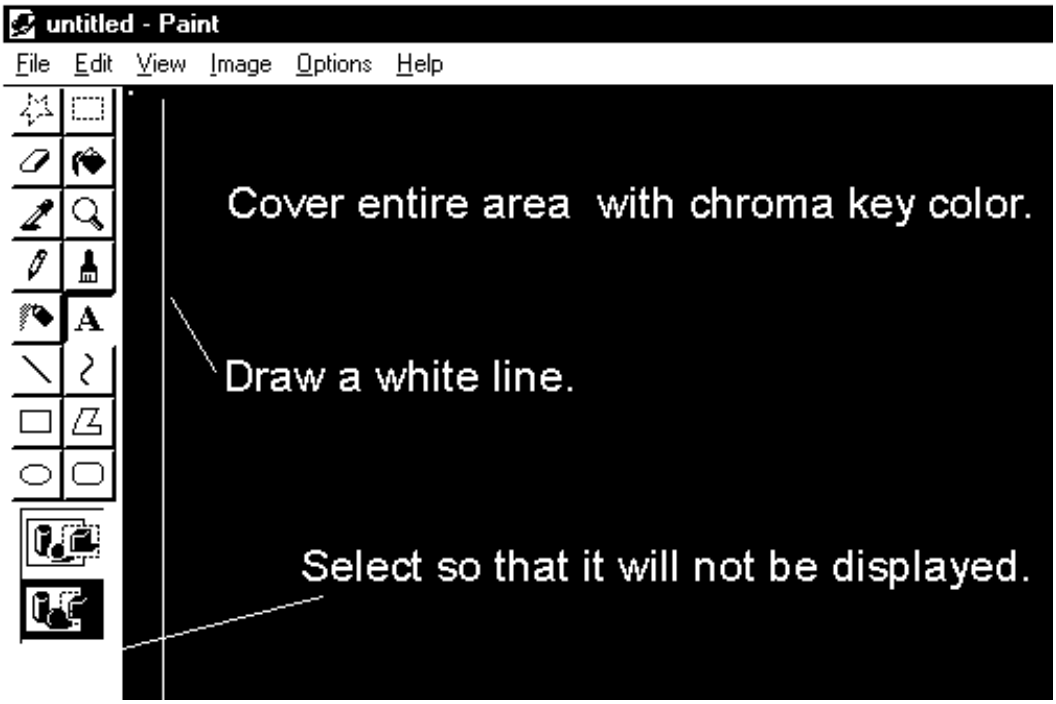

Figure 9-4: Phase Adjustments between Synchronization Signals and Clocks

Observe the vertical video signal using an oscilloscope. Apply synchronization using H-sync (TP1) as well as *Delay*; observe the white line signal. While monitoring the video switch signals on the oscilloscope, adjust (DL7, DL8) for the delay line. **Figure 9-5** shows an example where synchronization is applied with H-sync and video signals are observed. In the case of a 1024 x 768 75 Hz GUI property, the width of one pixel is approximately 10 ns. Therefore, make adjustments so that the output signal width will be close to that width. An inadequate adjustment causes the white line to be smudged in violet. Use the SEM data entry function to enter characters and lines on the image. Confirm that the white line does not smudge. Make similar checks by increasing and decreasing the brightness of the SEM image.

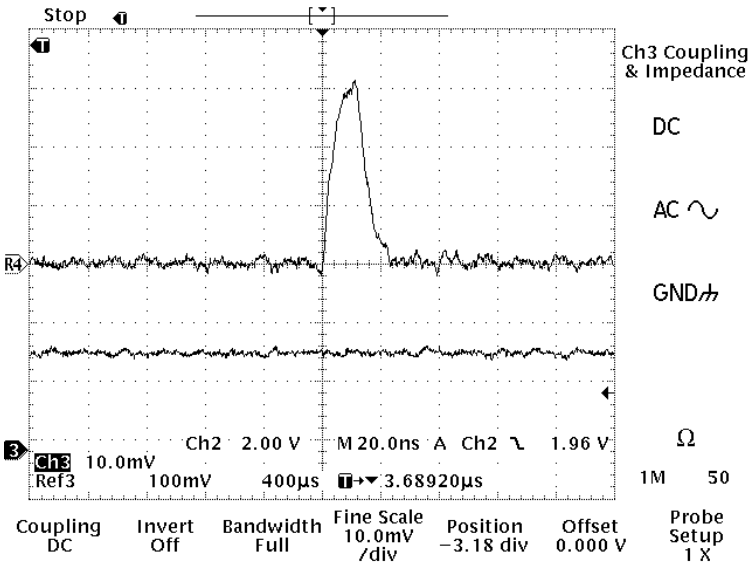

Figure 9-5 (a): Video Signal (ICG12-3)

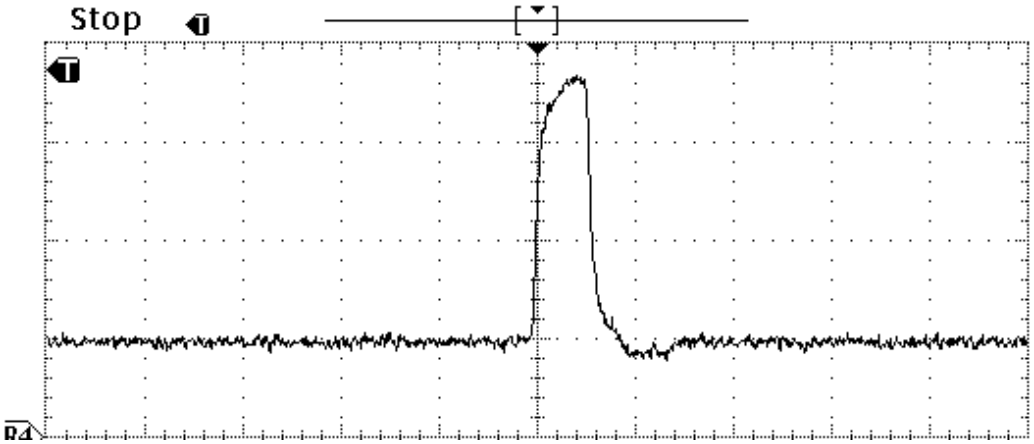

Figure 9-5 (b): Video Switch Signal (ICG12-16)

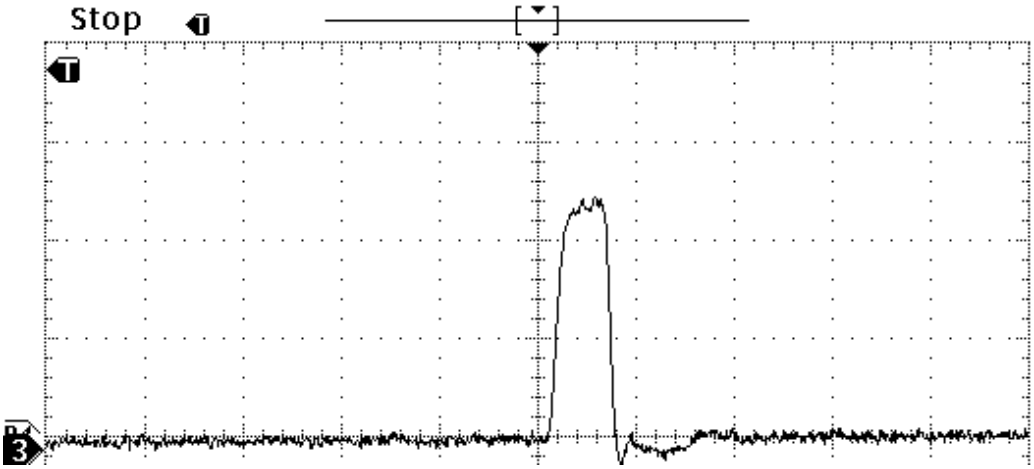

Figure 9-5 (c): Video Signal Output (ICG12-1)

Adjusting the Display Area in the Dual and Full Screen Mode

1. Use the Data Manager to open a 640 x 480 size BMP file with a 512 x 480 box cursor drawn at the center. Transfer this file back to the image memory.
2. Perform a *Dual* display position alignment on the adjustment window so that the size of the box cursor matches the frame for the SEM display area.
3. As in the case of the standard adjustment, if a noise is produced over the vertical edge of the display area, turn the Clock Phase Invert checkbox on the adjustment window on and off. Confirm the waveform. Fix the phase adjustment so that the fall edges of *V-sync* and *H-sync* and the rise edge of *Clk* are not close to each other (as in the case of the standard screen).
4. Confirmation Operation 1:

   If Dual-B in IMP-H-Start is small, a horizontal noise stripe is generated when any of the signals is unselected during the color synthesis process. Confirm that this condition does not occur.
5. Confirmation Operation 2:

   If the value of Dual-B in IP-Output-H-Start is incorrect, an image deviation occurs when the same image is color-synthesized. Confirm that this condition does not occur.
6. The correct vertical display position at Full (IP-Output V Start Offset) is when the lower edge of the GUI matches the lower edge of the image. However, because it is difficult to effect an accurate adjustment of the display position, in the coarse adjustment, use the same values as the Standard and Dual adjustments and perform the following procedures in a final adjustment:
   1) Freeze an appropriate SEM image at Full display. Use the data entry function to measure the size of the image.
   2) Save the image. If a regenerated size line agrees with the line before it was saved, the result is considered acceptable.

Capture an Image using a Trans-Buffer Size

1. Capture a screen in a 1280 x 960 size.
2. Save the results and re-display them using the Data Manager. Make *Input H-Start* adjustments on the adjustment window so that the joints at every 640 horizontal pixels match.

When changing the TV Mode from NTSC to PAL, perform the Following Operations:

1. Change image memory jumpers. Replace XTAL (See PAL Modification Assembly.)
2. On TOOL-Imp-Adj of SEM Manager, change IP Input V start to 15 → 1B.
3. In TOOL-Option Setup of SEM Manager, change NTSC to PAL. Then, Close → Open the SEM Manager.

9.3.3 Magnet Field Canceller

Block Diagram

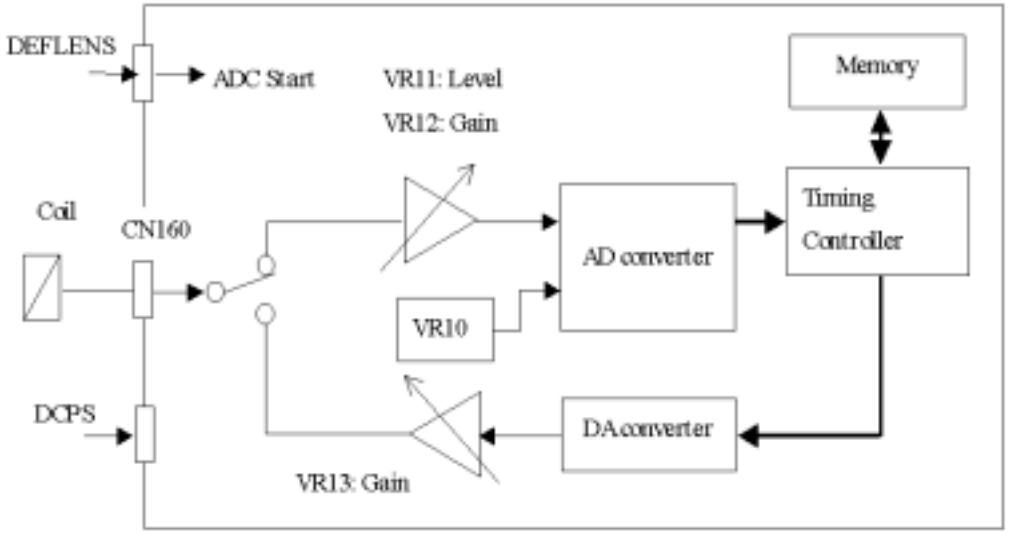

Figure 9-6: Magnet Field Canceller Block Diagram

Adjusting the Magnetic Field Canceller

1. When the push button switch SW1 is pressed, check to see that the relay RY10 comes on and turns off in approximately 3 seconds.
2. Observe TP11 on the oscilloscope. Adjust VR11 and VR12 so that the waveform level remains between 0 and 4 V.

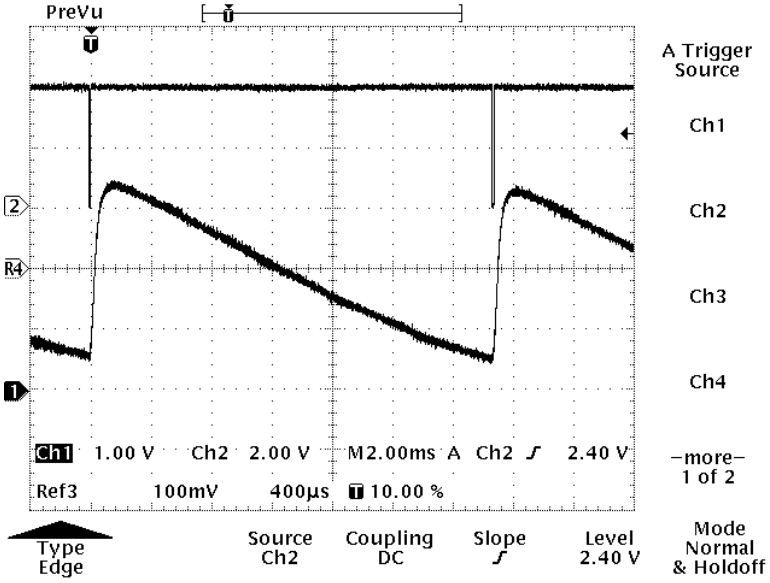

Figure 9-7: Input Waveform

3. Place a flux meter near the column unit. While monitoring TP12 on an oscilloscope, simultaneously observe the output waveform from the flux meter.

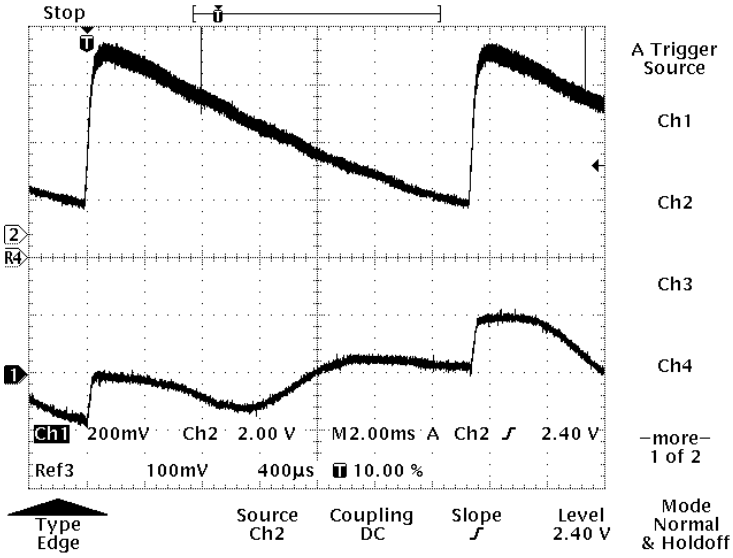

Figure 9-8: Observed State

4. Adjust the VR13 so that the magnetic field waveform is at a minimum when V-sync on the monitor is at the beginning of another cycle.

5. Adjust the VR10 so that the phase of the waveform of the canceller magnetic field matches the waveform of the monitor magnetic field.

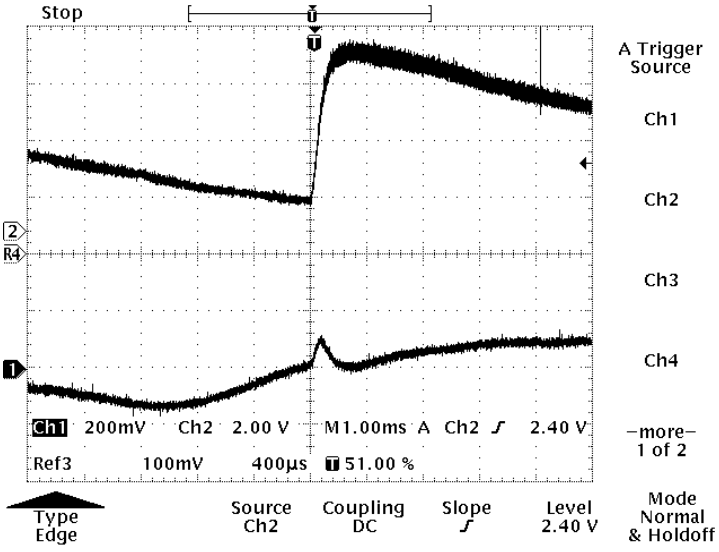

Figure 9-9: Inadequate Adjustment

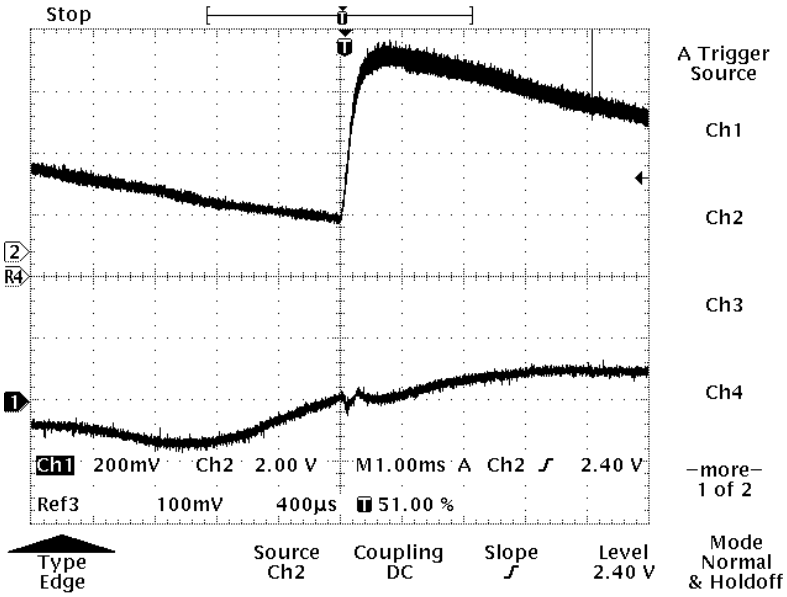

Figure 9-10: Complete Adjustment

9.3.4 Micro-adjustment Procedures

[Adjustment conditions]: Accelerating voltage: 15 kV
Sample height: 0.0 mm
R.R.: ON (0º)
Specimen holder: Rotation holder with mesh

Micro-motion Zero-center Adjustment (Adjusting the Origin of Micro-motions)

The zero-center position, in terms of both X and Y, is determined by detecting the position of the photocoupler. Therefore, this adjustment can be made by aligning the light-shielding plate for the photocoupler. The origin of the X axis can be adjusted by adjusting the light-shielding plate. Similarly, the origin of the Y-axis can be adjusted by adjusting the position of the photocoupler.

NOTE: After the eucentric position is adjusted (tilted axis adjustment), any adjustment of the zero-center should be re-checked. The position of the zero-center can be shifted by eucentric adjustments. If the zero-center position becomes mis-aligned, it should be re-adjusted.

1. Turn off the image shift option.
2. After performing image adjustments in the HM mode, set the magnification to the lowest power.
3. Using the trackball, align the target on the specimen to the center of the Scanning Image window (SEM screen).
4. Adjust the image in the LM mode. Use the Low Mag Position function of the Alignment window to bring the target in Step 1 above to the center of the Scanning Image window (SEM screen).
5. Press the Stage Reset switch on the evacuation panel to set the stage coordinates, X and Y, to (0.000, 0.000).
6. Set the magnification to the lowest power. Perform micro-adjustments (X, Y, mechanism) of the specimen so that the center of the rotation holder will be at the center of the SEM screen.

Adjusting the Center of the Specimen Micro-motion Tilt Axis (Eucentric Position)

1. Loosen the four specimen screws to an extent that does not cause a vacuum leak.
2. Set a 1300 magnification rate. Move the target specimen to the center of the Scanning Image window (SEM screen). (Use the Area Maker to display the center.)
3. Turn the tilt drive mechanism counterclockwise. Release the Tilt gear so that manual tilt adjustments can be made.
4. Manually tilt the image. Using the Z-axis knob, return the target, which has shifted from the center of the SEM screen, to the center.
5. Return the tilt angle to 0º. Return the target that has shifted from the center of the SEM screen to the center by means of specimen micro-motions.
6. Tilt the image to +20º. Use the tilt axis center adjustment screw to return the target that has shifted from the center of the SEM screen to the center.
7. Tilt the image to +20º. Return the target that has shifted from the center of the SEM screen to the center by means of specimen micro-motions.
8. Repeat the above steps, 4 through 7. Perform adjustments so that ultimately the shift of the target from the center of the SEM screen is less than ±2 µm. (Use the length measurement cursor.)
9. At a tilt angle of 0º, press the Reset button in the Column SetUp. Use the specimen position correction screw to focus. Return the target that has shifted from the center of the SEM screen to the center by means of specimen micro-motions.
10. Repeat the above steps, 4 through 9. Perform adjustments with the target in focus so that the shift of the target from the center of the SEM screen is less than ±3 µm.
11. Turn the tilt drive mechanism clockwise to reset the Tilt gear.
12. At a tilt angle of ±5º (auto mode), confirm that the shift by the target is less than ±1 µm.
13. While performing adjustments using the specimen position correction screw so that the center of the specimen tilt matches the in-focus position when the Reset button of the Column SetUp is pressed, gradually tighten the specimen micro-motion fixing screws (four screws).

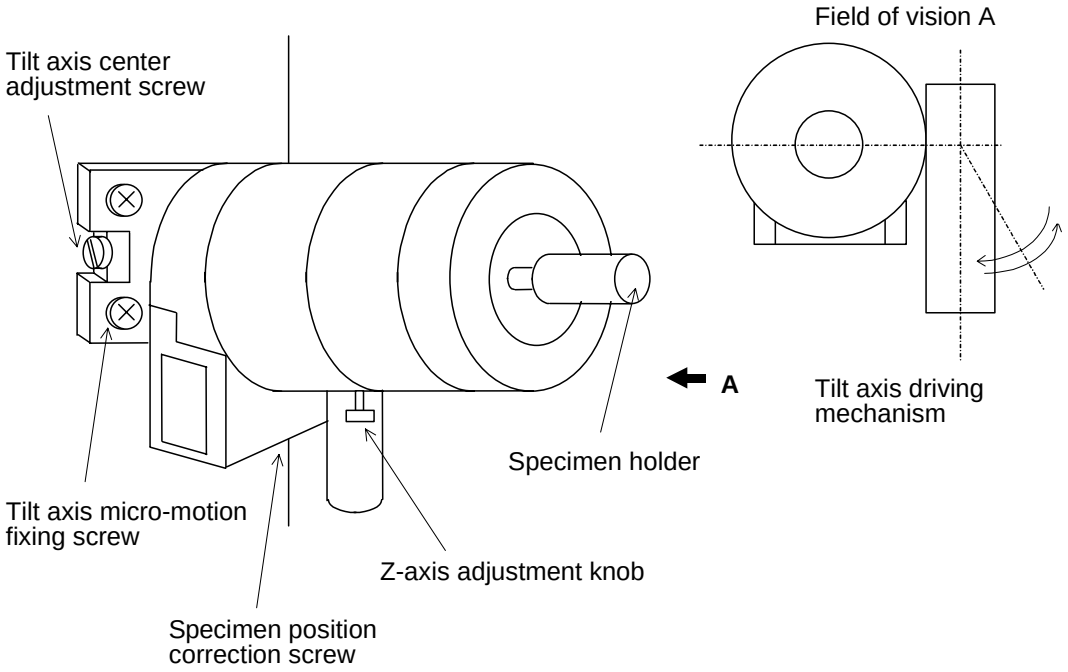

Figure 9-11: Micro-motion Adjustment Method

Adjusting the TILT Board

Determining the Angle

NOTE: Do not start the VRT during this adjustment. If the VRT is started before this adjustment, the board will tilt more than necessary, resulting in damage to the potentiometer.

1. Adjust the VR2 so that the voltage of TP7 will be 2.3 V (41.4º).
2. Adjust the VR1 so that the voltage of TP8 will be -2.3 V (-41.4º).

Adjusting the 0º

1. Adjust the VR5 so that the voltage of TP9 will be the same as TP6.
2. Adjust the VR3 and VR4 so that the voltage of TP11 will be +5 V.

Checking the Operation

1. Start the VRT. (If tilted, the axis will automatically return to 0º.)
2. Start the SEM. Open the Stage Control Panel.
3. Move the angle of the axis. Confirm that the voltage of TP9 conforms to the figures given in **Table 9-2**.

Table 9-2: Tilt Board Adjustment Specifications

No.	Angle (ºC)	TP9 Voltage (V)
1	0	0
2	-5	-0.278
3	-10	-1.111
4	5	0.278
5	10	1.111

4. Set the angle of the axis to -40º or greater. Confirm that the motor does not move more than -40º.
5. Set the angle of the axis to 40º or greater. Confirm that the motor does not move more than 40º.
6. Set the angle of the axis to an appropriate non-zero value. Turn off both the SEM and VRT.
7. Reboot the VRT. Confirm that the axis moves to 0º.
8. Start the SEM. On the display, confirm that the angle is at 0º.
9. Turn off both the SEM and VRT again. Reboot the VRT. Confirm that the axis does not move.

X-Y Stage Controller

The adjustment VRs for the X-Y stage controller are adjusted at the time the system is delivered. Therefore, they should not be rotated by unauthorized personnel. If any adjustment of the VR is needed, please contact the factory.

Confirming the Micro-motions of the Specimen

1. Confirm that the following position settings are in effect when the *Go to Home* button on the Stage Control window is pressed:

   X-axis: 0.000

   Y-axis: 0.000

   Tilt: 0.0 ± 0.1
2. Confirm the following: when the STAGE RESET switch on the evacuation control panel is pressed, a short buzzer sounds off and the stage moves; upon completion of the motion, the short buzzer sounds again, and the stage is set to the position indicated in step 1 above.
3. Confirming the limiter.

   Set the lowest magnification power in the LM mode. Confirm the items below.

   - When the trackball is continuously moved to the left, a buzzer sounds when the X position indicator on the Stage Control window exceeds +3.600, and the indicator window lights in red.
   - When the trackball is moved further to the left, both the position indicator and the micro-motions stop in the +3.600 ~ -3.650 range.
   - Similarly, when the trackball is continuously moved to the right, the buzzer sounds when the position exceeds -3.600, and the indicator window lights in red; when the trackball is moved further to the right, both the position indicator and the micro-motions stop in the -3.600 ~ -3.650 range.

- When the trackball is continuously moved upward, a buzzer sounds when the Y position indicator on the Stage Control window exceeds +2.000, and the indicator window lights in red.
- When the trackball is moved further upward, both the position indicator and the micro-motions stop in the +2.000 ~ +2.050 range.
- Similarly, when the trackball is continuously moved downward, the buzzer sounds when the position exceeds -2.000, and the indicator window lights in red; when the trackball is moved further downward, both the position indicator and the stage stop in the -2.000 ~ -2.050 range.

4. Confirming the micro-motions and the direction of motion of the CRT screen
   - When the trackball is turned to the right, the image should move to the right.
   - When the trackball is turned upward, the image should move upward.
5. When values 40 and -40 are entered in the Tilt input box of the Stage Control window and the specimen is tilted, the Tilt indicator should be within the ranges of 40.0±0.3º and -40.0±0.3º.

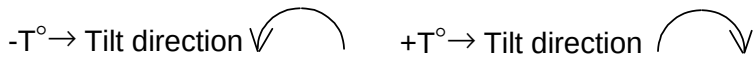

Specimen Micro-motion Test

This test is performed by pressing the Reset button with Vacc=15 kV, Sample Height=0.0 mm

Micro-motion Shift

Read off the limit display value on the Stage Control window. Attach an angle indicator plate to the stage, compare it with the value displayed on the window, and confirm that the extent of Tilt error is within ±1º.

Specifications	X	Y	T
	± 3.600 – ± 3.650 mm	± 2.000 – ± 2.050 mm	± 40° – ± 0.3°

Amount of Micro-motion Flow

Check the amount of micro-motion flow using the following method and parameters:
Magnification: 50,000; Probe Current mode: normal; C1: 5; both X and Y within ±1 mm

1. Fix a specimen target on the SEM screen. Move the trackballs X and Y independently to move the target approximately 1 µm, and then stop it.
2. Set the scanning speed to Slow-3 (20 seconds). Using the length measurement cursor, measure the amount of shift produced by one minute of motion. The amount of shift should be no more than 0.2 µm.

   NOTE: Do not freeze the image during the measurement.
3. Hysteresis (reproducibility of parallel movement)
   When the magnification is 50,000, the hysteresis should be no more than 0.2 µm.

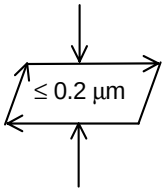

Figure 9-12: Hysteresis Measurement Method

Backlash

The backlash should be no more than 8 µm when the magnification is 2,000 and the amount of shift is approximately 50 µm.

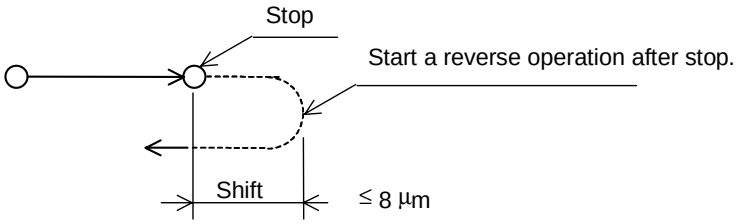

Figure 9-13: Backlash Measurement Method

Shift of Image when the Image is Tilted

- Shift in image position when the image is tilted
  At 30,000x magnification and T = ±5º, the shift should be no more than 1 µm.
- Amount of image jump with image tilt reversed
  At 30,000x magnification and T = ±5º, the jump should be no more than 1 µm.

Micro-motion Zero Center

Magnification: 100 (LM mode)

Measurements should be made using an adjustment rotation holder.

At the mid-point of X, Y, T (X = 0.000, Y = 0.000, T = 0.0º), the center of the specimen holder should be visible on the SEM screen.

9.3.5 Electronic Engineering System Adjustment Procedures

Explanation of Abbreviations

C1 lens: First condenser lens
C2 lens: Second condenser lens
R.R.: Raster rotation
LM mode: Low magnification mode
HM mode: High magnification mode

Adjustment Procedures (Items)

Following are adjustment guidelines to be followed before the system is shipped. Because adjustments are made using special tools and measurement devices prior to shipment, if the need for further adjustments arises, please perform adjustments only on the affected part.

- Setting the flashing intensity
- Confirming the EO Adjustment default value
- Entering current values for the C1 and C2 lenses
- Adjusting the offset between deflection magnification ranges
- Adjusting ExB
- Adjusting the position in which the electronic gun is to be mounted (mechanical)
- Adjusting the axes and registering axis correction values
- Adjusting the orthogonality
- Coarse adjustment of scanning amplitudes (HM/LM modes)
- Adjusting the deflection top/bottom row ratio
- Adjusting the low-magnification distortion (adjusting peripheral blurring – normally confirmation only)
- Checking the Focus Comp condition
- Adjusting the Focus Comp (normally confirmation only)
- Adjusting the HM mode reference magnification (second range)
- Adjusting the magnification between HM mode ranges
- Adjusting the LM mode magnification
- Adjusting the image shift top/bottom row ratio
- Correcting the image shift axis
- Adjusting the maximum image shift value
- Adjusting the HM mode image rotation
- Adjusting the LM mode image rotation
- Correcting for TV distortion
- Correcting out-of-axis color aberration (ExB-3 correction)

Setting the Flashing Intensity

Regarding flashing intensity values 1, 2, and 3, adjust the trimmer (see below) for HV tank: PC HVC board so that the emission display during the flashing will show the following values:

<Emission Display Specifications at Flashing>

Intensity 1: 0 ~ 5 µA · · · VR3: FL1
Intensity 2: 30 ~ 40 µA · · · VR2: FL2
Intensity 3: 40 ~ 50 µA · · · VR1: FL3

Confirming the EO Adjustment Default value

Until the adjustment of EO Adjustment items is completed, perform adjustments using the following default values (EO1, EO2, EO3):

([Ic1, Ic2 Adjustment] on the EO Adjustment 2 screen indicates stand-alone Display adjustment values.)

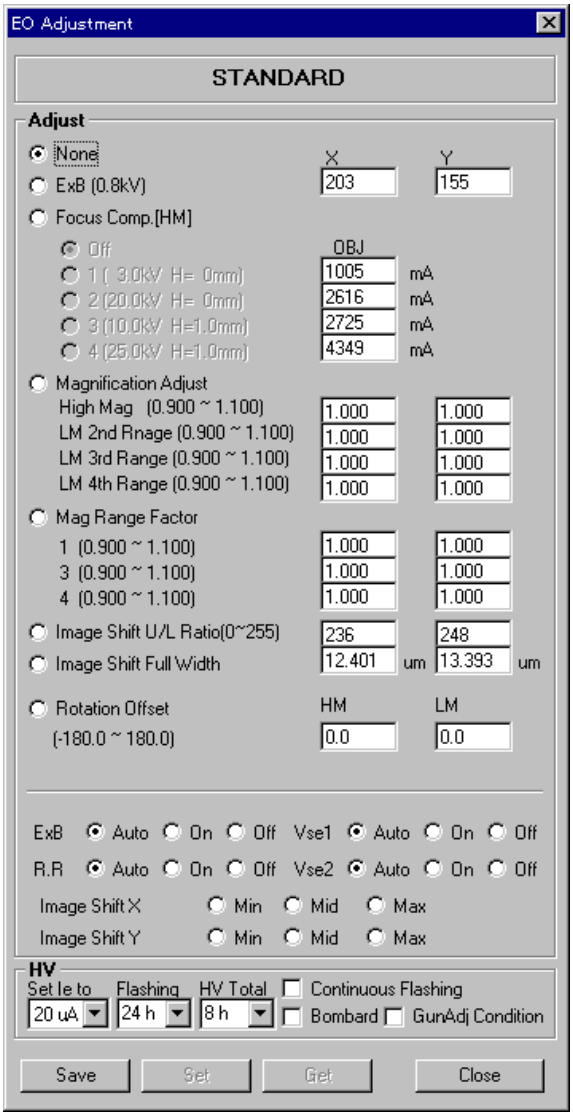

Figure 9-14: EO Adjustment 1 Screen

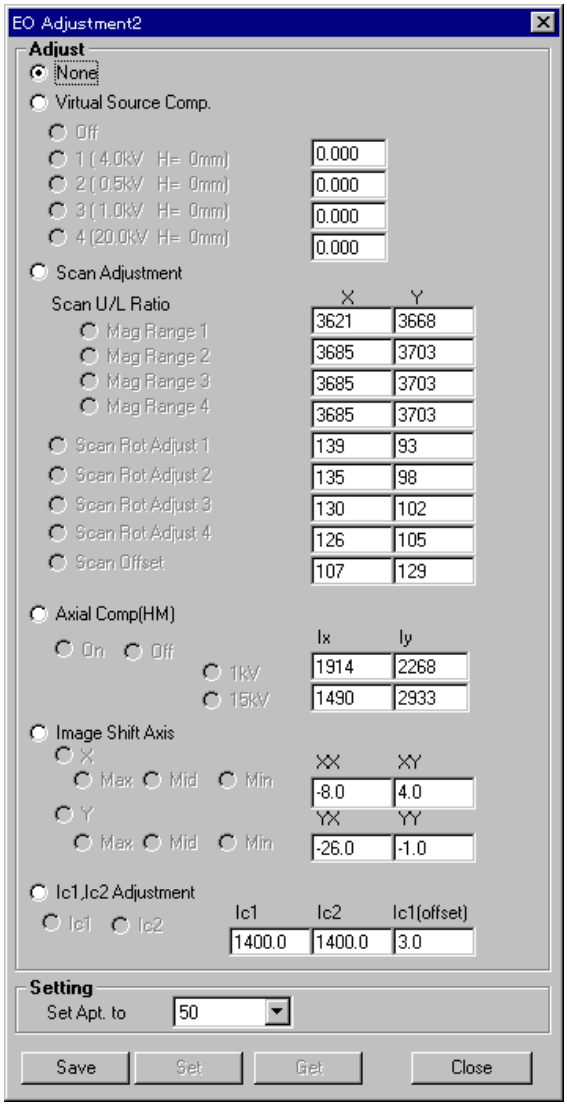

Figure 9-15: EO Adjustment 2 Screen

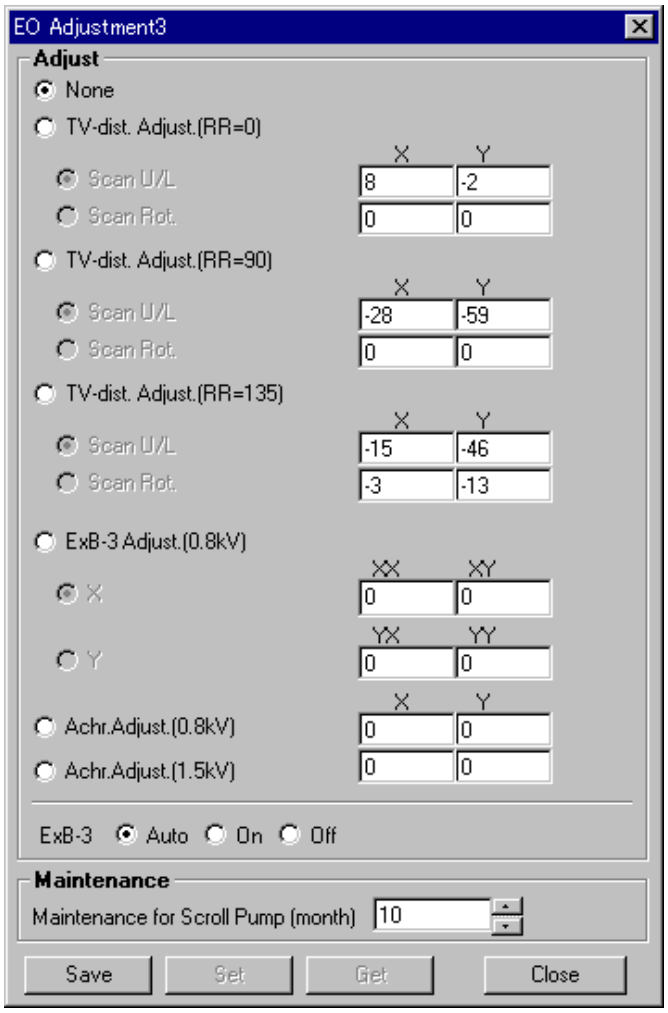

Figure 9-16: EO Adjustment 3 Screen

Entering Current Values for the C1 and C2 Lenses

Confirm that the C1, C2 lens current values on the Display adjustment recording paper agree with the Ic1, Ic2 adjustment settings on the EO Adjustment 2 screen.

Adjusting the Offset between Deflection Magnification Ranges

[Adjustment Conditions]: Accelerating voltage: 3 kV
Emission: 10 µA
Probe Current mode: Normal
Aperture: No. 1 (100 µm diameter)
Specimen holder: Spring-actuated standard specimen holder
Specimen: Specimen stub (with mesh)
Sample Height: 0.0 mm
Electrical alignment: All mid-points (execute “Reset All” on the alignment screen)
Image shift: Mid-point (the reset condition)
R.R.: Off

Axis Adjustment (Coarse Adjustment)

1. Perform a mechanical shaft adjustment (brightness control) of the electron gun under C1=Off, C2=Off conditions.
   (Perform this step under normal observation conditions without using the Beam AL mode.)
2. Perform a mechanical shaft adjustment (brightness control) of the C1 lens by setting C1=5.
   (Perform this step under normal observation conditions without using the Beam AL mode.)
3. By setting the objective lens aperture to No. 1 (100 µm diameter), perform an aperture brightness control (mechanical adjustment).
   (Perform this step under normal observation conditions without using the Beam AL mode.)
4. By setting C2=ON, perform the mechanical axis adjustment of the C2 lens in the Apert. AL mode. (Coarse adjustment acceptable)

Deflection Offset Adjustment between Magnification Ranges

1. By setting the LM mode (normal), click on Scan Offset (L) for EO Adjustment 2.
2. Adjust the alignment knob (X, Y) so that the image shift will be at a minimum when the magnification is switched from 180 (third range) to 150 (second range). Perform the adjustment by aligning the position of the 150-magnification image to the position of the 180-magnification image.
3. Upon completion of the adjustments, click on *Get, Set*, and *Save*, in that order.
4. Click on *None* (disconnect)
5. In the HM mode, set the magnification to 3.0 k, set the Apert. AL mode, and perform shaft adjustments using the alignment knob. If the image distortion and peripheral blurring are significantly large in this step, release the Apert. AL mode, and perform the procedure, "**Adjusting the Deflection Top/Bottom Row Ratio**" using the current adjustment conditions.
6. By setting the magnification to 2.5k (first range), click on Scan Offset (U) for EO Adjustment 2.
7. Start the Apert. AL mode. Adjust the alignment knob (X, Y) so that the objective lens current centers are aligned.
8. Upon completion of the adjustments, click on *Get, Set*, and *Save*, in that order.
   [Adjustment Specifications]: The scanning center deviations on the CRT before and after the magnification rate change must be within 2 mm.
9. Click on *None* (disconnect).

Adjusting ExB

[Adjustment Conditions]: Accelerating voltage: 0.8 kV
Emission: 10 µA
Probe Current mode: Normal
Specimen holder: Spring-actuated standard specimen holder
Specimen: Specimen stub (with mesh)
Sample Height: 0.0 mm
Electrical alignment: All mid-points (the reset condition)
Image shift: Mid-point (the reset condition)

Axis Adjustment (Coarse Adjustment)

1. From [Tool], open the EO Adjustment 1 screen. Turn off ExB.
2. Perform a Beam AL (mechanical shaft adjustment) of the electron gun under C1=C2=Off, objective aperture = Off conditions.
3. Perform a Beam AL (mechanical shaft adjustment) of the C1 lens by setting C1=5.
4. By setting the BM aperture to No. 1 (400 µm diameter), perform an aperture Beam AL (mechanical shaft adjustment).
5. By setting the objective lens aperture to No. 1 (100 µm diameter), perform an aperture Beam AL (mechanical shaft adjustment).
6. By setting C2=On, perform Apert.AL (mechanical adjustment) (coarse adjustment acceptable).

NOTE: When adjusting ExB, always use an accelerating voltage of 0.8 kV.

Setting ExB

1. In the LM mode, perform focus and stigmator adjustments (ExB: off).

   NOTE: When the EO Adjustment 1 screen is closed, ExB will be on. In this case, re-open the EO Adjustment 1 screen and reset ExB to off.
2. Move the stage and move the mark to the center of the CRT (using the crossbar cursor).
3. Turn on the ExB on the EO Adjustment 1 screen. Click on [ExB adjustment item].
4. Adjust the alignment knob so that the mark in step 2 will be at the center of the CRT.
5. If the image shifts extensively when ExB is turned on and off, perform a coarse adjustment at a low magnification, increase the magnification to 1.0 k (LM mode), turn the ExB on and off again, and perform adjustments so that the amount of image shift will be at a minimum. After the adjustment, turn the ExB ON.

   [EXB Adjustment Specifications]: When the ExB is turned on and off, the amount of image shift should be less than 5 mm on the CRT at an LM mode magnification of 1.0 k (less than 5 µm on the specimen).
6. Upon completion of the adjustment process, click on *Get* and *Set*, in that order. This operation saves the ExB adjustment data.
7. On the Adjustment Screen, click on *Save* to save the adjustment data.
8. Click on *None* (disconnect) on the Adjustment screen.

Adjusting the Position in which the Electronic Gun is to be mounted (mechanical)

[Adjustment Conditions]: Accelerating voltage: 1 kV
Emission: 10 µA
Probe Current mode: Normal
Specimen holder: Spring-actuated standard specimen holder
Specimen: Specimen stub (with mesh)
Sample Height: 0.0 mm
Electrical alignment: All mid-points (the reset condition)
Image shift: Mid-point (the reset condition)

1. Set C1 = C2 = Off, BM aperture = Off, objective aperture = Off. Perform a Beam AL (mechanical axis adjustment) on the electron gun (FE tip).
2. In the Beam AL mode, adjust the electron gun-mounting location by rotating the adjustment screw so that the outline flair is uniform when a round image is displayed on the CRT.
3. After making the adjustment, fasten the fixing screw for the electron gun to secure it. Fix another screw on the adjustment screw (double screws).
4. Install a magnetic shield on the electron gun. (Note that the axis correction condition described below [registered value] can vary depending upon whether or not a magnetic shield is provided in the electron gun unit.)

Adjusting the Axes and Registering Axis Correction Values

The following operation should be performed in the HM mode with an magnetic shield for the electron gun installed. If a magnetic shield needs to be installed later due to baking requirements, provisionally perform the following axis adjustment without a magnetic shield, and re-do the axis adjustment after a magnetic shield has been installed.

[Adjustment Conditions]: Probe Current mode: Normal
Specimen holder: spring-actuated standard specimen holder
Specimen: Specimen stub (with mesh)
Sample Height: 0.0 mm
Image shift: mid-point (the reset condition)

1. Set the accelerating voltage to 1 kV. Pull out the BM aperture and the objective aperture (the 0 position).
2. Click on *Reset All* on the Alignment screen to set the electromagnetic alignment to a mid-point.
3. Set C1 = C2 = Off. Perform a Beam AL (mechanical axis adjustment) on the electron gun.
4. Set the BM aperture to 1. Perform a Beam AL (mechanical axis adjustment) on the BM aperture.
5. Set the objective aperture to No. 2 (50 µm diameter). Perform a Beam AL (mechanical axis adjustment) on the objective aperture. The C2 lens should remain Off.
6. Set C1=5. Perform a Beam AL (mechanical axis adjustment) on the C1.
7. Open the EO Adjustment 2 screen. Click on *1 kV* on *Axial Comp (HM).*
8. Start the Apert. AL mode. Rotate the alignment knob (X,Y). Adjust the current center of the objective lens.
9. On the EO Adjustment 2 screen, click on *Get, Set*, and *Save*, in that order.
10. On the EO Adjustment 2 screen, click on *None* to disconnect the adjustment knob.
11. Turn on the C2 lens. Perform an Apert. AL (mechanical adjustment) on the C2 lens. Perform the operation by adjusting the focus and the stigmator as necessary.
12. Adjust the stigma alignment (X, Y).
13. Perform the normal Apert. AL (electromagnetic adjustment) again. (A mechanical axis adjustment performed after a stigma alignment will cause the stigma alignment to shift. Therefore, any axis misalignment following the stigma alignment should be adjusted by means of an electromagnetic alignment.)
14. Apply an accelerating voltage of 15 kV. Click on *Reset All* on the Alignment screen.

15. Perform a Beam AL (electromagnetic adjustment).
16. Open the EO Adjustment 2 screen. Check the *15 KV* entry on the *Axial Comp (HM)*.
17. Start the Apert. AL mode. Rotate the alignment knob (X,Y). Adjust the current center of the objective lens.
18. On the EO Adjustment 2 screen, click on *Get, Set*, and *Save*, in that order.
19. On the EO Adjustment 2 screen, click on *None*

    [Axis Adjustment Specifications]: Electromagnetic alignments (Beam AL, Apert. AL, Stig. AL) should work properly on accelerating voltages: 0.5 kV, 5 kV, and 30 kV.

Adjusting the Orthogonality

[Adjustment Conditions]: Accelerating voltage: 5 kV
Emission: 10 µA
Probe Current mode: Normal
Magnification mode: HM/LM modes
Specimen holder: Rotation holder
Specimen: Mesh
Sample Height: 0.0 mm
Image shift: Mid-point (the reset condition)
R.R.: Off

1. Set the magnification mode to the HM mode. Sample Height = 0.0 mm.
2. On the EO Adjustment 1 screen, click on *Off* for R.R. Completely turn off the Raster rotation.
3. Adjust the image. Align the specimen rotation angle using the adjustment rotation holder so that the mesh line on Slow-2 matches the horizontal line on the CRT. If there is a significant image distortion or blurring on the periphery to an extent that impairs the adjustment process, perform the procedure, "**Adjusting the Deflection Top/Bottom Row Ratio**" using the current adjustment conditions.
4. Select *Too/Debug/Menu/Measure* to display the length measurement cursor. Use this cursor as a reference line for the determination of orthogonality.
5. Set the magnification to 2.0 k (first range). Adjust the following trimmer so that the horizontal and vertical mesh lines are parallel to the horizontal and vertical lines of the length measurement cursor:

   SGVA board: VR1 (HM)

   [Adjustment Specifications]: an orthogonality of ±0.5º maximum at the adjustment point
6. Set the magnification mode to the LM mode.
7. Adjust the image. Align the specimen rotation angle using the adjustment rotation holder so that the mesh line on Slow-2 matches the horizontal line on the CRT
8. Set the magnification to 500. Adjust the following trimmer so that the horizontal and vertical mesh lines are parallel to the horizontal and vertical lines of the length measurement cursor:

   SGVA board: VR2 (LM)

   [Adjustment Specification]: an orthogonality of ±0.5º maximum at the adjustment point

Trimmer Adjustment of Scanning Amplitudes (HM/LM Modes)

[Adjustment Conditions]: Accelerating voltage: 5 kV
Emission: 10 μA
Probe Current mode: Normal
Magnification mode: HM/LM modes
Specimen holder: Rotation holder
Specimen: Mesh
Sample Height: 0.0 mm
Image shift: Mid-point (the reset condition)
R.R.: Off

The following adjustments should be performed after confirming that both *Magnification Adjust* and *Mag Range Factor* are 1.000 on the EO Adjustment 1 screen.

1. Perform image adjustment in the HM mode.
2. Set Slow-2 and magnification = 2.0 k. Using a length measurement cursor, measure the mesh pitch. Adjust the following trimmers so that the measured value will be 25.4 ± 1.0 μm:
   Amplitude in X-direction: VR3 (HM) for SGVA board
   Amplitude in Y-direction: VR5 (HM) for SGVA board
3. Perform image adjustment in the LM mode.
4. Set Slow-1 and magnification = 500. Using a length measurement cursor, measure 4 pitches of the mesh. Adjust the following trimmers so that the measured value will be 100 ± 5 μm:
   Amplitude in X-direction: VR4 (LM) for SGVA board
   Amplitude in Y-direction: VR6 (LM) for SGVA board

Adjusting the Deflection Top/Bottom Row Ratio

[Adjustment Conditions]: Accelerating voltage: 3 kV
Emission: 10 μA
Probe Current mode: Normal
Magnification mode: HM mode
Specimen holder: Spring-actuated standard specimen holder
Specimen: Specimen stub (with a micro-scale)
Sample Height: +2.0 mm
Image shift: Mid-point (the reset condition)
R.R.: Off

Adjusting the First Range

1. Set the magnification to 5.0 k (minimum magnification, first range). Perform an axis adjustment.
2. Click on *Scan Adjustment* on the EO Adjustment 2 screen.
3. Click on *Mag Range 1* in *Scan U/L Ratio* on the EO Adjustment 2 screen.

4. Using a Slow-2 or even slower scanning speed (e.g., Reduce-2), adjust the alignment knob X so as to minimize the peripheral blurring in the X direction at the center of the screen.
5. Upon completion of the adjustment in the X direction, click on *Get* and *Set*, in that order.
6. Similarly, adjust the alignment knob Y so as to minimize the peripheral blurring in the Y direction at the center of the screen.
7. Upon completion of the adjustment in the Y direction, click on *Get* and *Set*, in that order.

   NOTE: If a magnification is changed before step 7 (*Get, Set*), the adjustment condition will be cleared to the initial state before the adjustment was made. Therefore, the magnification should not be changed during the adjustment process. (This is also true of other magnification range adjustments.)

Adjusting the Second Range

1. Select 1 kV Acceleration and set the magnification to 7.0 k (minimum magnification for the second range).
2. Click on *Mag Range 2* in *Scan U/L Ratio* on the EO Adjustment 2 screen.
3. As in first range adjustment procedures 4 – 7, adjust the deflection top/bottom row ratio for the second range.

Adjusting the Third Range

1. At 1 kV Acceleration, set the magnification to 70 k (third range) (no image adjustments required).
2. Click on *Mag Range 3* in *Scan U/L Ratio* on the EO Adjustment 2 screen.
3. Enter from the keyboard the top/bottom row ratio adjustment value (the registered value for *Mag Range 2*) for the second range on the display window for *Mag Range 3*. Click on *Set*.

Adjusting the Fourth Range

1. Set the magnification to 700 k (fourth range) (no image adjustments required).
2. Click on *Mag Range 4* in *Scan U/L Ratio* on the EO Adjustment 2 screen.
3. Enter from the keyboard the top/bottom row ratio adjustment value (the registered value for *Mag Range 2*) for the second range on the display window for *Mag Range 4*. Click on *Set*.

Saving the Adjustment Conditions

Upon completion of the deflection top/bottom row ratio adjustments for the magnification ranges, click on *Save* and *None*, in that order.

[Adjustment Specifications]: The image distortion should be the same as the limit sample. If these adjustments fail to satisfy the distortion limit sample specifications, the following low-magnification distortion adjustments should be performed:

Adjusting the Low Magnification Distortion (adjusting peripheral blurring – normally confirmation only)

NOTE: This step should be performed only if the distortion limit sample specifications of "Adjusting the Deflection Top/Bottom Row Ratio", are not satisfied.

[Adjustment Conditions]: Accelerating voltage: 3 kV
Emission: 10 µA
Probe Current mode: Normal
Magnification mode: HM mode
Specimen holder: Spring-actuated standard specimen holder
Specimen: Specimen stub (with micro-scale/mesh)
Sample Height: +2.0 mm (micro-scale), +0.5 mm (mesh)
Image shift: Mid-point (the reset condition)
R.R.: Off

1. Set the micro-scale to the position Sample Height=+2.0 mm. Perform image adjustments.
2. Click on *Scan Adjustment* on the EO Adjustment 2 screen.
3. Click on *Scan Rot Adjust (H=2.0)* on the EO Adjustment 2 screen.
4. Set the magnification to 5.0 k. Under a *Reduce-2* scanning condition, move the scanning area to the upper part of the screen. Adjust the alignment knob X,Y so as to minimize the peripheral blurring in the right and left corners.
5. While keeping the *Reduce-2* scanning condition, move the scanning area to the lower part of the screen, confirm the peripheral blurring in the right and left corners, and confirm that it is approximately equal to the peripheral blurring in the upper part of the screen.
6. Upon completion of the adjustment, click on *Get* and *Set*, in that order, and then click on *None*.
7. Align the mesh to the Sample Height = +0.5 mm position. Perform image adjustments.
8. Click on *Scan Adjustment* on the EO Adjustment 2 screen.
9. Click on *Scan Rot Adjust (H=0.5)* on the EO Adjustment 2 screen.
10. Set the magnification to 1.5 k. Perform the same adjustments as Sample Height = +2.0 mm.
11. Upon completion of the adjustment, click on *Get* and *Set*, in that order, and then click on *None*.
12. Upon completion of the *San Rot Adjust* adjustments, click on *Save* to save the adjustment data.

Checking the Focus Comp Condition

[Adjustment Conditions]: Accelerating voltage: (See below.)
Emission: 10 µA
Probe Current mode: Normal
Magnification mode: HM mode
Specimen holder: Spring-actuated standard specimen holder
Specimen: Dedicated specimen stub (H = 0.0/+1.0 mm, integrated specimen)
Sample Height: 0.0 mm
Image shift: Mid-point (the reset condition)
R.R.: Off

1. Perform image adjustments with an accelerating voltage of 5 kV and Sample Height = 0.0. Adjust the Z knob for the stage so that the image is in focus with the Reset button of the *Column SetUp* screen pressed (the Focus display value = 0.0).

   NOTE: After performing the adjustments in Step (1), do not move the Z knob until this confirmation is completed.

2. Perform image adjustments at an accelerating voltage of 0.8 kV. Read the *Focus* display value.
3. Perform image adjustments at an accelerating voltage of 30 kV. Read the *Focus* display value. (Use a 25 kV accelerating voltage when Sample Height = +1.0.)
   Specifications: Relative to the focus value in step 1, those in steps 2 and 3 should be within ±0.1.

   NOTE: If the above specifications cannot be satisfied, perform *Focus Comp* adjustments.

Adjusting the Focus Comp (normally confirmation only)

Perform this adjustment only if the change in Focus display value relative to a change in accelerating voltage in "**Checking the Focus Comp Condition**" does not satisfy the above specifications.

Adjustments

[Adjustment Conditions]: Accelerating voltage: (See below.)
Emission: 10 µA
Probe Current mode: Normal
Magnification mode: HM mode
Specimen holder: Spring-actuated standard specimen holder
Specimen: Dedicated specimen stub (H=0.0/+1.0 mm, integrated specimen)
Sample Height: (See below.)
Electromagnetic alignment: All mid-points (the reset condition)
Image shift: Mid-point (the reset condition)
Vse1 = Vse2 = Off

NOTE: Do not change the Z value for the stage during the following adjustments.

1. Set the accelerating voltage to 3.0 kV, Sample Height = 0.0 mm. Perform image adjustments (axis, focus, stigmator).
2. Click on *Focus comp1*.
3. Click on *Degauss*. Adjust the focus and the stigmator.

   NOTE: Clicking on *Degauss* can cause the axis to shift. Should this occur, re-do the electromagnetic alignment in the Beam AL and Apert. AL modes.

   CAUTION: Perform focusing as accurately as possible, using an approximate magnification of 5.0 k. Inadequate focus adjustments can decrease the control accuracy of the optical system (e.g., magnification computation, image rotation computation, and the accuracy of Sample Height settings).

4. Repeat the *Degauss* and focus adjustments two or three times. Confirm that clicking on *Degauss* does not cause a fuzzy image. Click on *Get*.

   NOTE: Do not *Save* at this stage. Execute the *SAVE* command after performing the adjustments *Comp1 ~ Comp4*.

5. Perform image adjustments by setting the accelerating voltage to 20 kV (with the Sample Height remaining at 0.0 mm).

   NOTE: Before performing this adjustment, make sure that Vse1 and Vse2 are Off.

   NOTE: If the stage Z has been inadvertently moved, re-do the procedures beginning with step 1.

6. Click on *Focus Comp2*. Repeat steps 3 and 4.
7. Set the accelerating voltage to 10 kV and Sample Height = 1.0 mm. Perform image adjustments after moving the stage X, Y to the position of the specimen to be focused on with Height=1.0mm. The specimen height should not be changed using the Z knob.
8. Click on *Focus Comp3*. Repeat steps 3 and 4.
9. Set the accelerating voltage to 25kV without moving the stage Z.
10. If the stage Z has been inadvertently moved, re-do the procedures beginning with step 7.
11. Click on *Focus Comp4*. Repeat steps 3 and 4.
12. Click on *Set*. This operation executes the correction calculations of Focus Comp 1 ~ 4.
13. Click on *Focus Comp Off*, and then click on *None*.
14. Set Vse1 and Vse2 to Auto.
15. Click on *Save* to save the adjustment data.

Confirmation

Re-confirm the settings according to "**Checking the Focus Comp Conditions**."

Adjusting the Reference Magnification (HM Mode)

[Adjustment Conditions]: Accelerating voltage: 5 kV
Emission: 10 µA
Probe Current mode: Normal
Specimen holder: Rotation holder
Specimen: Micro-scale
Sample Height: 0.0 mm
Image shift: Mid-point (the reset condition)
R.R.: Off

1. Confirm that the *Magnification Adjust* in *EO Adjustment 1* in both X and Y is 1.000.
2. Set the magnification to 20 k. Measure the 10-pitch of the micro-scale using the length measurement cursor.
3. When the measured values for X and Y directions are Lx (µm) and Ly (µm), respectively, employ the following procedures to register the calibration values:
   1) Click on the *Magnification Adjust* of *EO Adjustment 1*.
   2) Enter the following values from the keyboard into the numeric input columns of *High Mag*:
      X = Lx/2.4 Y = Ly/2.4
   3) Click on *Set* and *Save*, in that order.
   4) Click on *None*.

NOTE: Calibrate the X and Y magnification rates by aligning the micro-scale pattern directions to the vertical and horizontal directions, respectively, using a dedicated rotation holder.

Adjusting the Magnification between HM Mode Ranges

[Adjustment Conditions]: See "**Adjusting the Reference Magnification (HM Mode)**."

Adjusting the First Range Magnification

1. Confirm that the *Mag Range Factor* in *EO Adjustment 1* in both X and Y is 1.000.
2. Using the following magnifications for the first and second ranges, load an image of the same object (e.g., debris) at Slow-3, and measure the length of the image using the length measurement cursor. Set the measurements at the first- and second range magnifications to L2 and L3, respectively. (On the screen, the size to be measured must be in a 50-100 mm range.)

   Magnification for Range-1: 2.5 k … measured value: L1

   Magnification for Range-2: 3.0 k … measured value: L2
3. Click on *Mag Range Factor*. Enter the following values from the keyboard into the numeric value input column of *(Range) 1*; click on *Set, Save, None*, in that order:

   Input value: L1/L2
4. Confirm that when the size of the same object is measured in magnifications 3.5 k (second range) and 3.0 k (first range), any value deviation is within ±1%.

Adjusting the Third Range Magnification

1. Set the magnification to 35 k. Measure the 5-pitch of the micro-scale using the length measurement cursor.
2. Click on *Mag Range Factor*. Enter the following values from the keyboard into the numeric value input column of (Range) 3.

   When the measured values for X and Y directions are Lx (μm) and Ly (μm), set X = Lx/1.2, Y = Ly/1.2
3. Click on *Set, Save, None*, in that order.
4. After changing the magnification, repeat the measurement in step 1. Confirm that the measurement error is within ±1%.

Adjusting the Fourth Range Magnification

1. Set the magnification to 300 k (third range); use the length measurement cursor to measure the spacing between the micro-scales. Let L3 be this value.
2. Set the magnification to 350 k (fourth range); use the length measurement cursor to measure the spacing between the micro-scales. Let L4 be this value.
3. Calculate the value L4/L3 and substitute it into (Range) 4. Click on *Set, Save, None*, in that order.
4. Change the magnification. Measure pattern widths using magnifications of 300 k and 350 k. Verify that the following specifications are met:

   [Specifications]: (L4 - L3)/L3 = within ±0.01 (within ±1 %)

Adjusting the LM Mode Magnification

[Adjustment Conditions]: Accelerating voltage: 5 kV
Probe Current mode: Normal
Specimen holder: Rotation holder
Specimen: Mesh
Sample Height: 0.0 mm
R.R.: Off
LM Mode Select: Normal

1. Perform image adjustments using an accelerating voltage of 5 kV, C1 = 5 (normal), Sample Height = 0.0 mm and HM mode.
2. Switch to the LM mode. Set the *Low Mag Mode/Mode Select* on the *Column SetUp* screen to normal, and perform focusing adjustments.
3. Use a rotation holder to perform adjustments so that the horizontal line of the mesh matches the horizontal line on the screen.
4. Set the magnification to 500. Load the image using either Slow-3 or Slow-4.
5. Using the adjustment length measurement cursor, measure the 4-pitch (101.6 μm) Lx2, Ly2 of the mesh.
6. Click on Magnification Adjust of EO Adjustment 1.
7. Enter the following values into the input box X,Y of the *LM 2nd Range*. Click on *Set*.
   Input value (X): Lx2/101.6 Input value (Y): Ly2/101.6
   Adjustment precision: 101.6±1μm (within ±1%)
8. For the third and fourth ranges, enter the same values as the second range from the keyboard. Click on *Set*.
9. Click on *Save* to save the data, and then click on *None*.

Adjusting the Image Shift Top/Bottom Row Ratio

[Adjustment Conditions]: Accelerating voltage: 5 kV
Specimen holder: Rotation holder
Specimen: Mesh
Sample Height: 0.0 mm
R.R.: Off

1. Reset the Image Shift to the mid-point to perform axis adjustments (electromagnetic). The Apert.AL should be aligned accurately.
2. Click on *Image Shift X-Max* on the EO Adjustment 1 screen to maximize the X shift.
3. Click on *Image Shift U/L Ratio* of the EO Adjustment 1 screen.
4. Start of Apert. AL mode.
5. Adjust the alignment knob X only so as to eliminate any horizontal image fluctuations due to the wobble. (The vertical image fluctuations will remain.) When the horizontal image fluctuations have been removed, click on *Get* to display the current value. Perform final adjustments using a numeric

input value (X). (Repeatedly entering numeric values less than or greater than the current value and clicking on *Set* in order to determine an optimum point.)

6. Exit from the *Apert. AL* mode. Click on *Image Shift X-Mid* to reset the image shift to a mid-point.
7. Click on *Image Shift Y-Max* on the EO Adjustment 1 screen to maximize the Y shift.
8. Click on *Image Shift U/L Ratio* of the EO Adjustment 1 screen (if already checked, this operation can be skipped).
9. Start of Apert. AL mode.
10. Adjust the alignment knob Y only so as to eliminate any vertical image fluctuations due to the wobbler. (The horizontal image fluctuations will remain.) When the vertical image fluctuations have been removed, click on *Get* to display the current value. Perform final adjustments using a numeric input value (Y). (Repeatedly entering numeric values less than or greater than the current value and clicking on *Set* in order to determine an optimum point.)
11. Exit from the *Apert. AL* mode. Click on *Image Shift Y-Mid* to reset the image shift to a mid-point.
12. Click on *Set* to register the adjustment data.
13. Click on *Save* to save the adjustment data.
14. Click on *None* to disconnect the adjustment knob.

Correcting the Image Shift Axis

Perform this adjustment after the adjustments from "**Setting the Flashing Intensity**" through "**Adjusting the Image Shift Top/Bottom Row Ratio**" are all complete.

[Adjustment Conditions]: Accelerating voltage: 5 kV
Specimen holder: Rotation holder
Specimen: Mesh
Sample Height: 0.0 mm
R.R.: Off

1. Set the image shift, both in X and Y, to a mid-point (shift quantity: 0). Perform image adjustments in the Beam AL and Apert. AL modes. The Apert. AL should be adjusted especially accurately. Upon completion of the adjustment, turn Off the AL mode.
2. Click on *Image Shift Axis* of the EO Adjustment 2 screen. Click on *X*.
3. After clicking on the *Max* of *X*, start the Apert. AL mode.
4. Adjust the Y alignment knob so as to obtain the current center conditions. Perform final adjustments using a numeric input value. (Repeatedly entering numeric values less than or greater than the current value and clicking on *Set* in order to determine an optimum point.)
5. Upon completion of the adjustment process, click on *Get* and *Set*, in that order (the Apert. AL mode remains in operation).
6. Click on the *Mid* of *X*. Confirm that the Apert. AL mode is at the current center.
7. Reset the Apert. AL mode.
8. Upon completion of the adjustment of X, click on the *Mid* of *X*, and then click on *Y*.
9. After clicking on the *Max* of *Y*, start the Apert.AL mode, and adjust the Y alignment knob so as to obtain the current center conditions. Perform final adjustments using a numeric input value.

10. Upon completion of the adjustment process, click on *Get* and *Set*, in that order (the Apert. AL mode remains in operation).
11. Confirm that the Apert. AL mode remains at the current center even when the *Mid* of Y is clicked.
12. Reset the Apert. AL mode. Set Y to *Mid*.
13. Click on *Save* to save the adjustment data.
14. Click on *None* to disconnect the adjustment knob.

Adjusting the Maximum Image Shift Value

[Adjustment Conditions]: Specimen holder: Rotation holder
Specimen: Mesh
Sample Height: 0.0 mm
Focus: 0.0 (perform focusing using the Z knob by pressing *Reset* in *Column SetUp*).
R.R.: Off

1. By adjusting the stage Z, align the image to the focus position Sample Height = 0 mm.
2. Click on *Image Shift X-Max* on the EO Adjustment 1 screen.
3. Using the adjustment length measurement cursor, measure the amount of image shift that is caused when *Min* is clicked from *Image Shift X-Max*.
4. Enter the image shift quantity (μm) in the *Image Shift Full Width-X*.
5. Perform similar adjustments on the image shift Y.
6. Click on *Set* to register the data.
7. Click on *Save* to save the data
8. Click on *None* to disconnect the adjustment knob.

NOTE: The Sample Height should be set accurately using the focus reference. If the focus setting deviates from Sample Height = 0.0 mm, the accuracy of RISM due to an image shift will be reduced.

Adjusting the HM Mode Image Rotation

[Adjustment Conditions]: Accelerating voltage: 5 kV
Specimen holder: Rotation holder
Specimen: Mesh
Sample Height: 0.0 mm
R.R.: Auto (Rotation Offset (HM) = 0)

1. Adjust the raster rotation so that the direction of image shift matches the horizontal line on the screen when the stage is moved only in the X direction by coordinate driving.

   NOTE: The stage should be adjusted near the mid-point (within a ±0.1 mm range).
2. Click on *Rotation Offset* on the EO Adjustment 1 screen to enter an R.R. adjustment value (including the sign) in the HM input box.

   Adjustment accuracy: within ±0.5º
3. Click on *Set* to register the adjustment data.
4. Click on *Save* to save the adjustment data

5. Click on *None* to disconnect the adjustment knob.

Adjusting the LM Mode Image Rotation

[Adjustment Conditions]: Accelerating voltage: 5 kV
Specimen holder: Rotation holder
Specimen: Mesh
Sample Height: 0.0 mm
R.R.: Auto (Rotation Offset (LM) = 0)

1. Perform focusing using the stage Z in the HM mode.
2. Perform image adjustments using the normal LM mode (selected on *Mode Select* in *Column SetUp*).
3. Adjust the raster rotation so that the direction of image shift matches the horizontal line on the screen when the stage is moved only in the X direction by coordinate driving.

   NOTE: The stage should be adjusted near the mid-point (within a ±0.1 mm range).
4. Click on *Rotation Offset* on the EO Adjustment 1 screen to enter an R.R. adjustment value (including the sign) in the LM input box.

   Adjustment accuracy: within ±0.5º
5. Click on *Set* to register the adjustment data.
6. Click on *Save* to save the adjustment data
7. Click on *None* to disconnect the adjustment knob.

Correcting for TV Distortion

[Adjustment Conditions]: Accelerating voltage: 3 kV
Emission: 10 µA
Probe Current mode: Normal
Magnification mode: HM mode
Specimen holder: Spring-actuated standard specimen holder
Specimen: Specimen stub (with a micro-scale)
Sample Height: +2.0 mm
Image shift: Mid-point (the reset condition)
R.R.: Off

1. Perform image adjustments at Sample Height = +2.0.
2. Set the magnification to 5.0 k (lowest magnification, first range); set the scanning speed to *Fast (TV).*
3. Turn off the raster rotation link; set the raster rotation to 135º.
4. Click on TV-dist. Adjust (RR = 135) on the EO Adjustment 3 screen.
5. Click on *Scan U/L*. Adjust the alignment knob X, Y so that the periphery blurring on the right and left, and at the top and the bottom is minimized.
6. Click on *Get* to display the current value.
7. Click on *Scan Rot*.

8. Adjust the alignment knob X, Y so that the periphery blurring on the right and left, and at the top and the bottom is minimized
9. Click on *Get* to display the current value.
10. Repeat steps 5 through 9 to minimize periphery blurring.
11. Click on *Set*.
12. Set the raster rotation to 0º. Click on *TV-dist. Adjust (RR=0).*
13. Click on *Scan U/L*. Adjust the alignment knob X, Y so that the periphery blurring on the right and left, and at the top and the bottom is minimized.
14. Click on *Get, Set*, in that order.
15. Set the raster rotation to 90º. Click on *TV-dist. Adjust (RR=90).*
16. Click on *Scan U/L*. Adjust the alignment knob X, Y so that the periphery blurring on the right and left, and at the top and the bottom is minimized.
17. Click on *Get*, *Set*, in that order.
18. Upon completion of the adjustment process, click on *Save* to save the adjustment data.
19. Click on *None* to disconnect the adjustment knob.

    [Adjustment Specifications]: See the limit sample.

Correcting Out-of-axis Color Aberration (ExB-3 Correction)

[Adjustment Conditions]: Accelerating voltage: 0.8 kV
Emission: 10 µA
Probe Current mode: Normal
Magnification mode: LM mode
Specimen holder: Rotation holder
Specimen: Mesh
Sample Height: 0.0 mm
Image shift: Mid-point (the reset condition)
R.R.: Off

Adjusting the Control Coefficients

1. Perform image adjustments under the following conditions: accelerating voltage: 0.8 kV, Sample Height: 0.0 mm, HM mode.
2. Switch to the LM mode. Perform image adjustments.
3. Click on *ExB-3 Adjust. (0.8 kV)* on the EO Adjustment 3 screen.
4. Click on *Off* in ExB-3 Auto/On/Off.
5. Using the stage, move a marking on the SEM image to the center of the CRT.
6. Click on *On* in ExB-3 Auto/On/Off.
7. Click on *X* in ExB-3 Adjust. (0.8 kV).
8. Adjust the alignment knob X, Y so that the movement of the field of view (marking) is minimized when *ExB-3 Auto/On/Off* is toggled between *On* and *Off*.

9. Upon completion of the adjustment process, click on *Get, Set*, in that order.
10. Click on *Y* in ExB-3 Adjust. (0.8 kV).
11. Adjust the alignment knob X, Y so that the movement of the field of view (marking) is minimized when *ExB-3 Auto/On/Off* is toggled between *On* and *Off*.
12. Upon completion of the adjustment process, click on *Get, Set*, in that order.
13. Click on *Save*.

    [Adjustment Specifications]: The amount of image shift on the CRT when *ExB-3* is toggled between *On* and *Off* should be within 5 mm at an LM mode magnification of 1.0 k.

Adjusting the Out-of-axis Color Aberration Correction Conditions

The input value should be set to 0 (no adjustments required).

This page intentionally left blank.

10 Maintenance

10.1 Periodic Maintenance

10.1.1 Periodic Maintenance Items and Interval

The periodic maintenance items and intervals are shown in **Table 10-1**.

Table 10-1 Periodic Maintenance Items and Interval

No.	Item	Interval	Note
1	Electron gun baking	—	• If the IP ultimate vacuum does not reach the values shown below. IP-1: 1 x 10^{-7} Pa or less IP-2: 2 x 10^{-6} Pa or less IP-3: 7 x 10^{-5} Pa or less • If IP is stopped for 3 days or more due to a power failure or vacation. • If the tip noise exists • If V1 rises rapidly
2	FE-Tip replacement	—	• If V1 initial value reaches 6.5 kV • If V1 initial value reaches 5.5 kV or more (recommended) • If V1 is 6.0 kV but the stable emission cannot be obtained
3	Dry pump	10 months or 8,000 hours (EDSP12)	The interval varies depending on the pump maker
4	Penning gauge	6 months	
5	Objective lens movable aperture	—	When astigmatism cannot be obtained with STIGM
6	Scintillator replacement	3 years	

10.2 Purpose of Periodic Maintenance

It is very important to perform periodic maintenance to maintain the instrument in the best condition.

10.3 Method of Periodic Maintenance

10.3.1 Electron Gun Baking

Perform the electron gun baking according the **Figure 10-1**.

1. Pull out the HV cable head and remove the column cover.
2. Insert the HV cable head into the baking interlock in the display section.

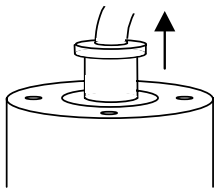

3. Secure the gun heater with the heater band.

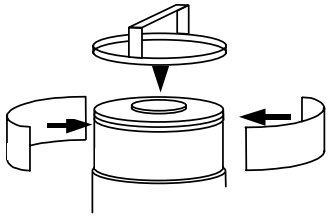

4. Connect the Inner Bake lead wire to the heater terminal. Either side of the lead wire (red or white) can be connected.

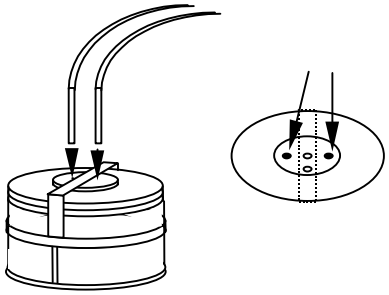

5. Connect the Outer and Inner Bake lead wires to the Bake Fuse board located in the back of the column.

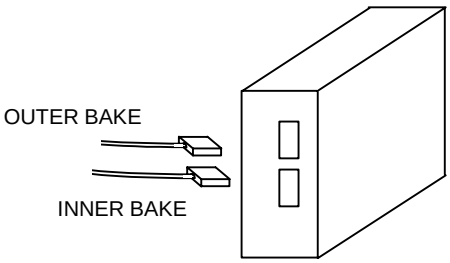

6. Attach the baking safety cover.
7. Set the baking timer and start.

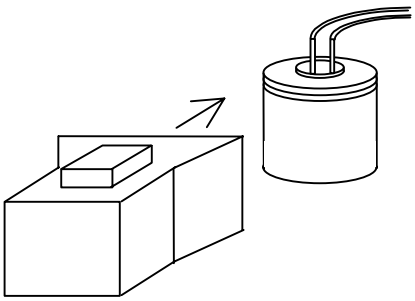

8. After baking has stopped, allow six or more hours for the column to completely cool.
9. Check the vacuum.
10. Remove the safety cover and the outer and inner baking lead wires.
11. Reattach the column cover and the HV cable head.
12. Check the image.

Figure 10-1: Electron Gun Baking

NOTE: The baking timer should be set as follows.

Outer bake time: 8 hours

Delay time: 6 hours

Inner bake time: 4 hours

10.3.2 FE-Tip Replacement

Precautions

- Wear plastic gloves and never touch the internal vacuum parts with bare hands when assembling.
- The assembly tools must be washed with an ultrasonic wave or cleaned with acetone, ether, etc.
- Check the tip point using an optical microscope (~x100) and use a tip that has a straight sharp point.
- Do not blow on the tip point with a dust spray, blower, etc.
- Check that the vacuum seal surface and gasket surface of the flange is not scratched. If there is a scratch, remove it with #800 to #1,000 emery paper.
- Tighten flange bolts with a torque wrench.
- Remove dust, etc, from the part with a dust spray or blower.

Returning the Electron Gun Section to Atmospheric Pressure

1. Close valve MV1 (GUN Valve).
2. Turn Off switches IP-1, 2 and 3 on the evacuation panel of the main unit.
3. Open MV-2, 3 and 4 in this order.
4. Change the EVAC LOCK switch on the evacuation panel to the release side (left).
5. Press the AIR button to let air into the specimen chamber and electron gun.
6. Remove the HV cable from the electron gun. (Protect the cable head from dust by wearing the polyethylene gloves.)
7. Remove the electron gun covers.

Removing the Tip

1. Loosen the flange tightening bolts (16 places) with the attached torque wrench. (The 4” dia. flange is located in the upper section of the electron gun chamber.)
2. Remove three of the bolts as shown in **Figure 10-2** and attach supports (A) and (B) as shown in **Figure 10-3**.
3. Lift the flange slowly while keeping it horizontal and remove it from the electron gun chamber. (Though the heater pin may not come off occasionally, lift the flange slowly since it is OK to stretch the spring.)
4. Set the flange on the table with the flange up.
5. Install the 4” dia. cover flange to the upper part of the electron gun chamber right away so that the inside does not get contaminated.

6. Loosen the two M3 screws that support the tip with a hexagonal wrench. See **Figure 10-4**.
7. Remove the tip from the holder with tweezers. See **Figure 10-5**.

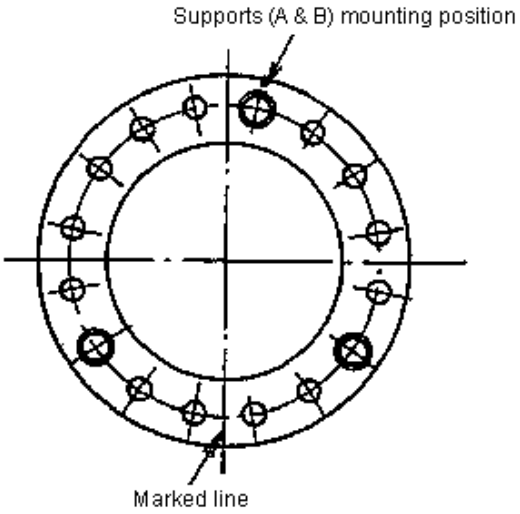

Figure 10-2: Electron Gun Flange Top View

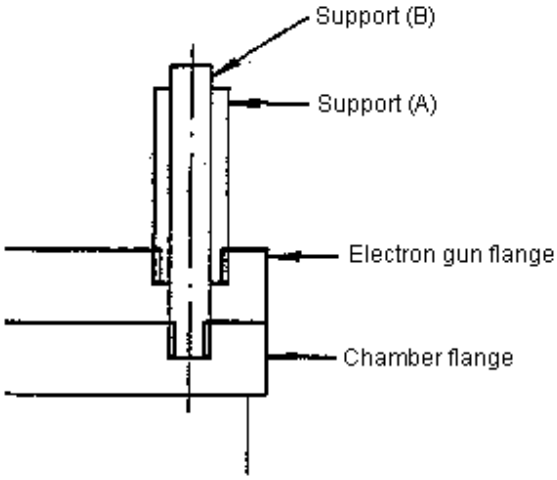

Figure 10-3: Cross Sectional View of Mounting Supports (A) and (B)

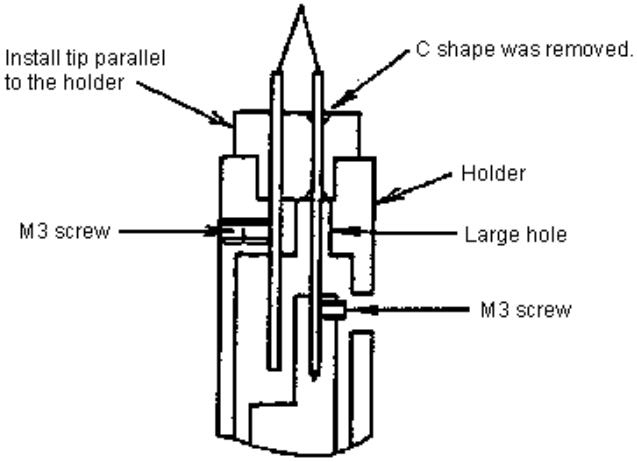

NOTE: Insert tip into the large hole of the pin holder from which the C shape was removed (and is not covered with gold plating).

Figure 10-4: Mounting the Tip

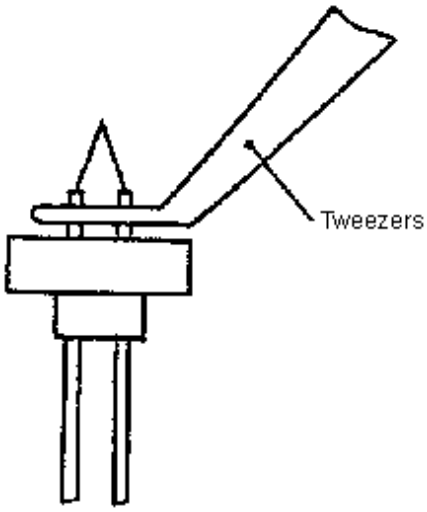

Figure 10-5: How to Grip Tip

Mounting a New Tip to the Tip Holder

1. Mount the prepared new tip in the holder using tweezers. See **Figure 10-4**. (If mounted in reverse order, flashing cannot be done.)
2. Hold the tip parallel (not slanted) to the holder and tighten the M3 tip holder screws with a hexagonal wrench.
3. Replace the spring with a new one.
4. If the connector pin (heater pin) is not aligned with the internal heater, adjust so that the spring and the heater pin become straight. (**Figure 10-6)** If the heater pin has poor contact, INNER BAKING cannot be done.
5. Verify that the tip holder surroundings and high voltage ceramic insulator is not contaminated. If dust or contamination is detected, clean it with an electric vacuum cleaner by attaching a thin pipe to the tip of the vacuum cleaner. (Clean the tip of the pipe thoroughly beforehand using acetone or ether.)

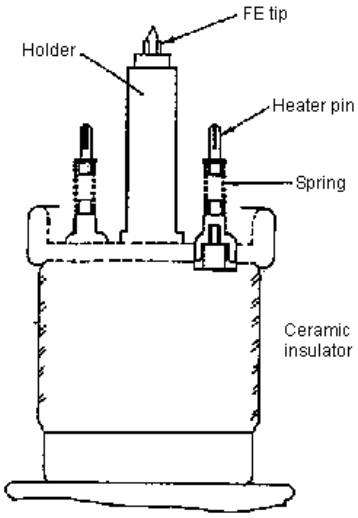

NOTE: The spring must be replaced with a new one every time. Adjust the spring so that it is aligned with the heater pin

Figure 10-6: A Part of Electron Gun

Mounting Tip Holder to the Electron Gun Chamber

1. Remove the cover flange from the upper part of the electron gun chamber.
2. Check the inside of the electron gun. If the dust or contamination is detected, clean it with an electric vacuum cleaner by attaching a thin pipe to the tip of the vacuum cleaner. (Clean the tip of the pipe thoroughly using acetone or ether beforehand.)
3. Install a new metal gasket. Before installation, verify that both sides of the gasket and the surface of the flange are not contaminated.
4. Install the tip in the electron gun chamber so that the tip terminal comes to the front of the electron gun chamber. (**Figure 10-7**) The electron gun is aligned parallel by supports (A) and (B).
5. Attach the INNER BAKING terminal to the anode heater terminal, and check for continuity with an ohmmeter. The heater resistance is about 30 Ω at room temperature. (**Figure 10-7**) If there is no continuity, lift the electron gun section again and reinstall.
6. Detach supports (A) and (B), install the bolts and tighten the nuts with a torque wrench. Nut tightening torque must be increased in the following sequence: 10 Nm → 12 Nm → 15 Nm → 18 Nm. Tighten the nut diagonally as shown in **Figure 10-8**.

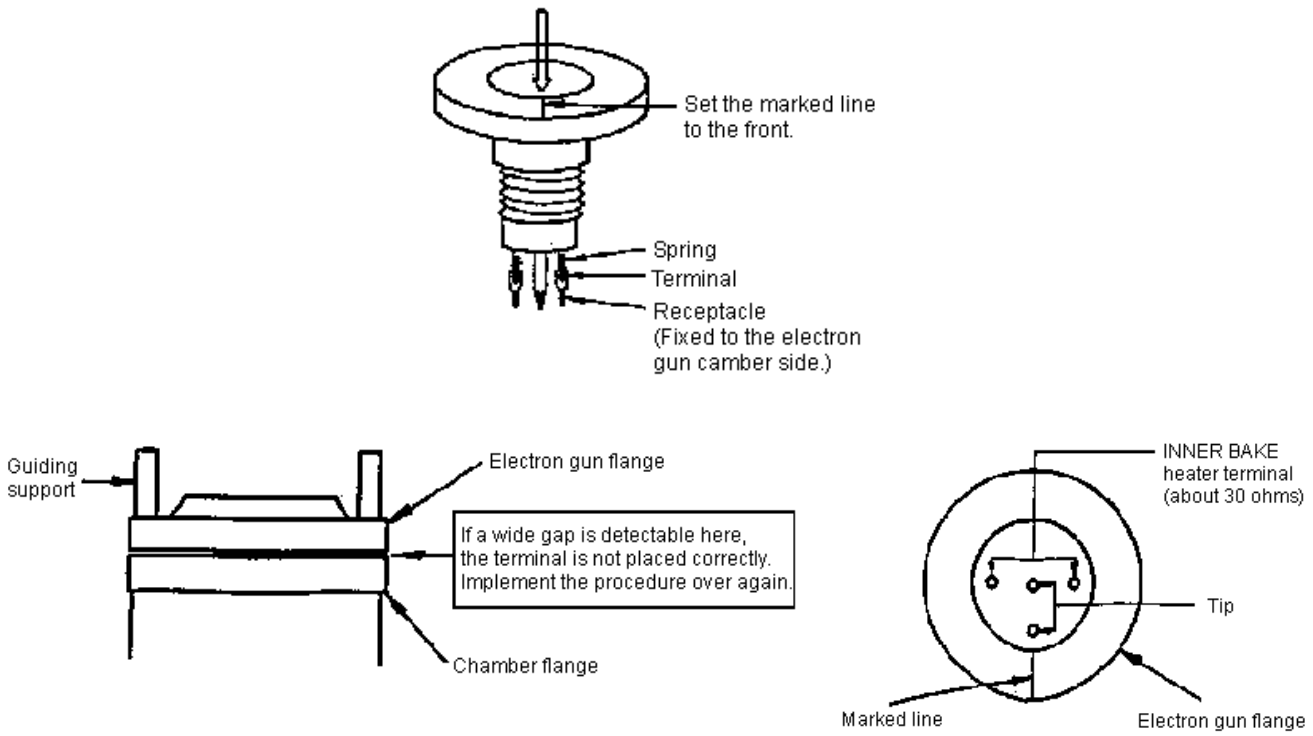

Figure 10-7: Mounting into the Electron Gun Chamber

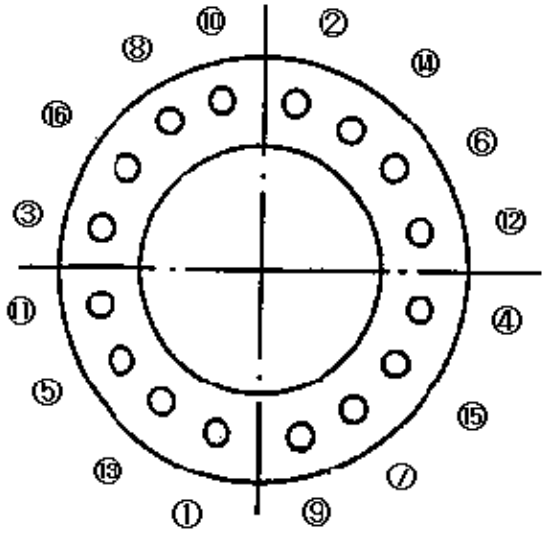

NOTE: Tighten 1 through 16 in this order.

Figure 10-8: Nut Tightening Sequence

Evacuating the Electron Gun

1. Turn ON the EVAC switch to evacuate the specimen chamber and electron gun.
2. Wait 1 - 2 hours after the HIGH lamp flashes to display the vacuum of the specimen chamber.
3. Install the baking heater on the electron gun chamber.
4. Remove the IP-1 connector from the ion pump and turn ON IP-1 on the evacuation panel. Because high voltage is applied to the IP-1 connector, do not touch it to avoid electric shock.
5. Set the OUTER BAKING timer only. (Do not attach the INNER BAKING terminal rod.) Set the OUTER BAKING timer to 14 hours or more. (Set the OUTER BAKING to complete two hours prior to turning ON all IPs.
6. Turn OFF the IP-1 switch on the evacuation panel and connect the IP-1 connector.
7. Turn ON switches IP-1, 2 and 3.
8. Close valves MV-2, 3 and 4. (Close the associated valve as each IP turns ON.)
9. Check the evacuation condition in one hour or so. (Verify that the ultimate vacuum of each IP is 1 x 10^{-5} Pa or less.)
10. Attach the INNER BAKING terminal rod to the electron gun and connect the connector.
11. Start normal Baking. See **Figure 10-1**.
12. Verify that the ultimate vacuum of each IP and that there is no vacuum leakage.

    IP-1 $\leq$ 1 x 10^{-7} Pa

    IP-2 $\leq$ 2 x 10^{-6} Pa

    IP-3 $\leq$ 1 x 10^{-5} Pa

Breakdown Voltage Test

1. Attach the discharge protection tool to the electron gun as shown **Figure 10-9**.
2. Attach the HV cable.
3. Set the IP vacuum meter to display the IP-2 vacuum.
4. Set V0 to 20 kV, select bombard in the EO Adjustment 1 window and HV to ON. When the MV-1 is not OPEN, select bombard to turn HV ON.
5. Verify that there is no discharge or HV leakage using the IP-2 vacuum meter. Increase V0 to 25 kV and then 30 kV in ten minutes intervals.
6. Set V0 to 30 kV and verify that there is no discharge by moving the electron gun X and Y axis. (Check it at least one hour.)

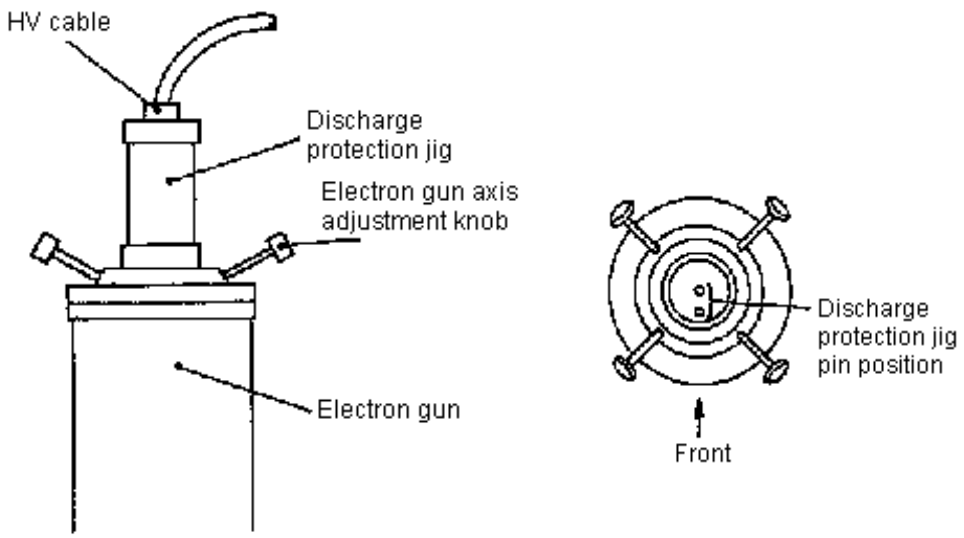

NOTE: Make sure that the discharge protection tool and the interior of the electron gun insulator are free from dust.

Figure 10-9: Breakdown Voltage Test

Tip Rounding Operation

1. Wait until the flashing interval at degassing is between 30 seconds and 1 minute or IP-1 vacuum recovers.
2. Set the flashing strength to 1 and perform flashing. Set the flashing strength to 1 and verify that the meter range is 0 to 10 μA. If not, adjust it.
3. Repeat the flashing operation several times until there is no more out-gas from the Tip. (It is OK if the deteriorated vacuum of IP-1 is 1×10^{-7} Pa or less at flashing.)
4. Set the flashing strength to 2 and repeat the flashing operation several times until there is no more out-gas. (It is OK if the deteriorated vacuum of IP-1 is 1×10^{-7} Pa or less at flashing.) Set the flashing strength to 2 and verify that the meter range is 30 to 40 μA. If not, adjust it.
5. Check an initial value of V1 when the accelerating voltage is 1 kV and the emission current is 10 μA. If the initial value of V1 is 3.5 to 3.9 kV, it is not necessary to round the tip.
6. Set the flashing strength to 3 and repeat the flashing operation several times when the initial value of V1 is 3.5 kV or less. Set the flashing strength to 3 and verify that the meter range is 40 to 50 μA when flashing. If not, adjust it.
7. Check the initial value of V1 again.
8. Repeat steps 6 and 7 until the initial value of V1 becomes 3.5 to 3.9 kV.

FE Bombard

1. Set the accelerating voltage to 30 kV and the emission current to 10 μA, and observe for about 30 minutes.
2. Select bombard in the EO Adjustment 1 window and set the emission current to 50 μA.
3. Set the accelerating voltage to 7 kV or 30 kV and bombard for 4 hours or more.
4. Set the emission current to 10 μA, and check the image quality.

Check Items after the Tip Replacement

- Set the accelerating voltage to 1 kV or 30 kV, and check the image quality.
- Repeat electron gun baking and FE bombarding if the tip noise exists.

Tip Replacement Procedure Flowchart

The Tip Replacement Procedure Flowchart is shown in **Figure 10-10**.

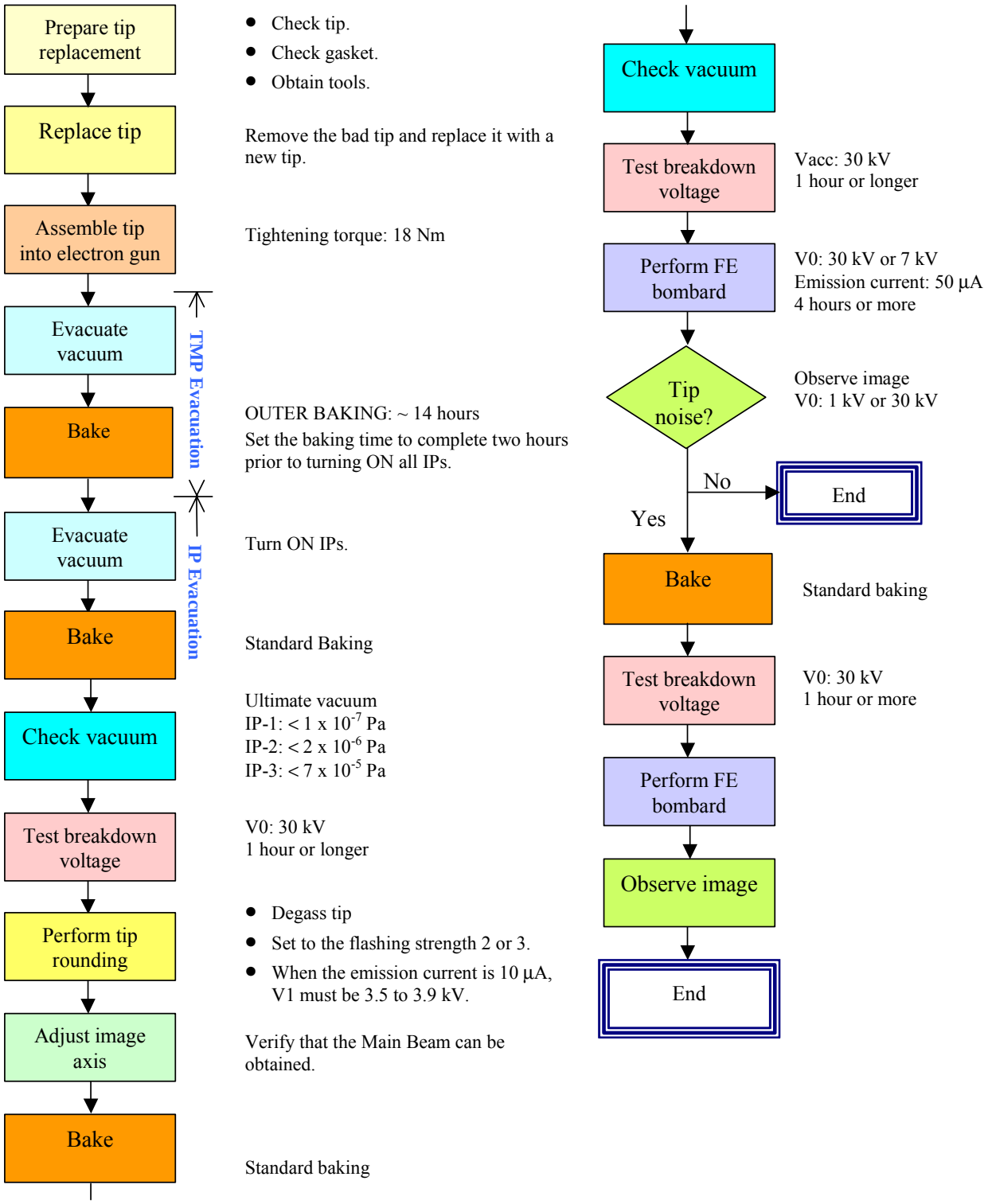

Figure 10-10: Tip Replacement Flowchart

10.3.3 Dry Pump

Dry Pump Maintenance

It is recommended that the ESDP12 dry pump be inspected at least once every ten months (if continuously used) or every 8,000 hours by a service engineer from Edwards Co.

- One month before the maintenance, the message shown below will appear when the SEM starts.

  (Message)

  One month remains before the periodic maintenance date of the dry pump that is used with the S-5200 main unit. Contact the nearest service person for the periodic maintenance by the date shown.

- After the maintenance date, the message shown below appears when the SEM starts or the HV is applied.

  The periodic maintenance date has passed. Stop the evacuation operation to prevent damage, and perform the dry pump periodic maintenance.

- When the periodic maintenance is implemented, select Menu/Option/Maintenance and record the maintenance date.

NOTE: For dry pumps other than ESDP12, refer to the instruction manual for each pump.

Dry Pump Replacement

1. Turn OFF the display power.
2. Turn OFF the EVAC SW and wait until the instrument stops completely.
3. Turn OFF the main breaker on the power supply unit.
4. Remove the power cable from the dry pump side.
5. Connect the power cable removed in step 4 to a new dry pump.
6. Turn ON the main breaker on the power supply unit.
7. Turn ON the EVAC SW and verify that the instrument operate correctly.

10.3.4 Penning Gauge

Set the specimen chamber to atmospheric pressure and remove the penning gauge from the main unit. Clean the penning gauge following the procedure shown in **Figure 10-11**.

Figure 10-11: Penning Gauge Cleaning Procedure

Penning Gauge Maintenance

Disassembling

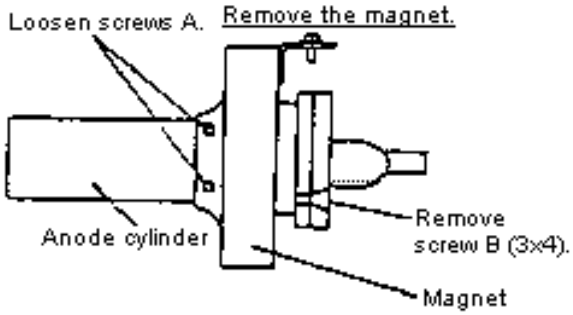

Disassemble

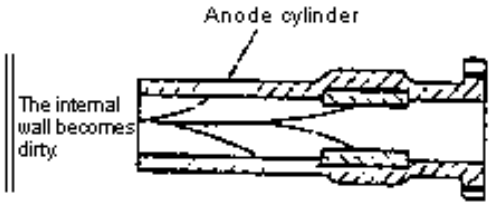

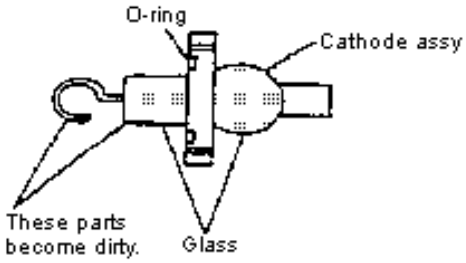

NOTE: Remove the O-ring from the cathode assy. Using a bamboo stick to avoid scratching it.

Cleaning

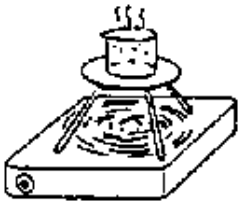

NOTE: Boil the cathode assy. and the anode cylinder for 10 to 15 minutes. Leave them in the air for about 10 minutes, and clean them by rubbing with cotton moistened with cold water.

Assembling

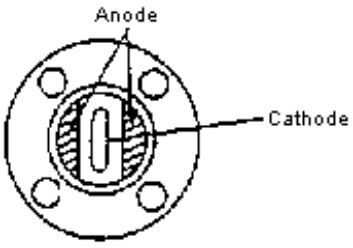

Cross Sectional View

NOTE: Attach the cathode without touching the anode.

10.3.5 Objective Movable Aperture

Replacing the Objective Movable Aperture

1. Set the specimen chamber to atmospheric pressure.
2. Remove the flange by loosening the fixed screws (4 ea).
3. Pull out the objective movable aperture straight while supporting the flange.
4. Remove the aperture holder screw using a jeweler's screw driver.
5. Remove the aperture holder with tweezers.
6. Remove the objective aperture plate from the aperture board with tweezers.
7. Clean the aperture holder and aperture board.
8. Put the aperture plate on the aperture board after baking or coating.
9. Put the aperture holder on the plate and tighten the aperture holder screw.
10. Insert the objective aperture section straight into the flange and tighten the flange screws (4 ea).
11. Evacuate the specimen chamber.

Cleaning the Objective Aperture Plate

1. Use the evaporator for baking an aperture plate. Refer to the instruction manual comes with the evaporator for handling of the evaporator.
2. Attach the molybdenum in the evaporator.
3. Establish a high vacuum in the evaporator and bake the molybdenum board only. Increase the current until the molybdenum is white hot. Be careful not to apply too much current because the molybdenum board may fuse.
4. Wait ten minutes after baking and put air into the evaporator.
5. Put the objective aperture plate on the center of the molybdenum board.
6. Establish a high vacuum in the evaporator, heat the molybdenum board until it is white hot and bake the objective aperture plate. Be careful not to continuously apply a high current because the objective aperture will melt.
7. Wait ten minutes after baking and put air into the evaporator.
8. Take out the objective aperture plate with tweezers.
9. Coat the baked objective aperture plate on both sides 10 to 20 nm thick with platinum-palladium (Pt-Pd) using an ion coater.

10.3.6 Scintillator Replacement

Precautions

- Make sure to turn off the DISPLAY switch when a scintillator is being replaced.
- Do not touch the surface of the scintillator.
- Wear plastic gloves when assembling the parts inside the vacuum. Do not touch the parts with bare hands.

Scintillator Replacement Procedure

1. Establish the specimen chamber to atmospheric pressure.
2. Remove the flange by loosing the screws (4 ea).
3. Pull out the secondary electron detector straight while supporting the flange.
4. Remove the shield pipe. The shield pipe is a screwed type.
5. Loosen the scintillator suppression ring screw using a jeweler's screw driver.
6. Remove the scintillator suppression ring.
7. Remove the scintillator with tweezers.
8. Attach a new scintillator and secure it with a scintillator suppression ring screw.
9. Put the aperture holder and tighten it with an aperture holder screw.
10. Insert the secondary electron detector into the flange straight and tighten with the flange screws (4 ea).
11. Evacuate the specimen chamber.

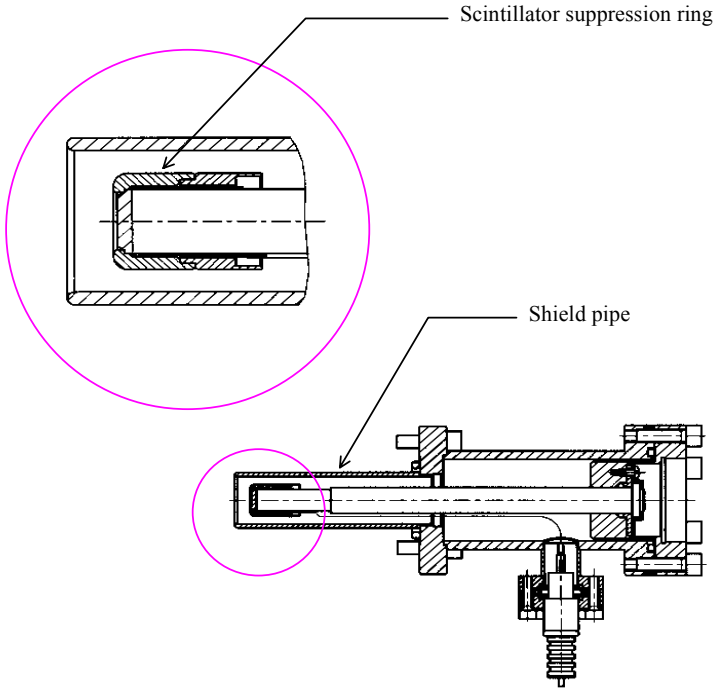

10.4 Estimated Periodic Maintenance Time

The estimated periodic maintenance time for each item are shown in **Table 10.2**.

Table 10.2 Estimated Periodic Maintenance Time

No.	Item	Maintenance Time	Note
1	Electron gun baking	2 days	
2	FE-Tip replacement	5 days	
3	Dry pump	—	The maintenance time varies depending on the pump maker.
4	Penning gauge	1 day	
5	Objective lens movable aperture	1 day	
6	Scintillator	1 day	

10.5 Maintenance Parts List

10.5.1 Standard Maintenance Parts Lists

The standard maintenance parts list is shown in **Table 10.3**.

Table 10.3 Standard Maintenance Parts List

Part Number	Part Name	Location	Q'ty
J821153	Fuse LM03	Main unit COL-CN	2
J821154	Fuse LM05	Display DCPS (F28, F29, F32)	3
J821155	Fuse LM10	Main unit PC-RL (F9)	1
J821157	Fuse LM20	Display DEF/LENS (F1, F2), DCPS, Main unit DEF/AMP (F1, F2, F3, F4)	13
J821158	Fuse LM32	Display DCPS, Main unit EVAC (F1)	10
J821159	Fuse LM50	Display DCPS	8
J821032	Fuse ML10A	Display DCPS (F17)	1
J821042	Fuse NGU-N15A	Display ACPS	1
J821334	Time lag fuse 218001	Main unit ACPS, PC-LC	7
J821335	Time lag fuse 218002	Main unit PC-RL	2
J821336	Time lag fuse 2183.15	Display ACPS, Main unit ACPS	4
J821349	Time lag fuse 218005	Display ACPS, Main unit ACPS, PC-RL	10
J821351	Time lag fuse 218008	Display DEF/LENS	1
J821352	Time lag fuse 218010	Main unit PC-RL	2
J853101	Pilot lamp 8 V, 0.15 A	IP power	1
L456759	O ring AS568-110FPM	Specimen holder	
L456801	O ring AS568-211FPM	Specimen stage	
L456802	O ring AS568-212FPM	Specimen stage	

Part Number	Part Name	Location	Q'ty
L456804	O ring AS568-214FPM	Specimen stage	
L456765	O ring AS568-116FPM	Objective lens movable aperture	
585-4083	Helicoflex H15014	Specimen stage	
	Helicoflex H150	EDX port	
	Helicoflex H150	BSE port	
	Helicoflex H150	Extra-1 port	
385-8819	Helicoflex H150016	Faraday cup port	

10.5.2 Recommended Maintenance Parts List

The recommended maintenance parts list is shown in **Table 10.4**.

Table 10.4 Recommended Maintenance Parts List

Part Number	Part Name	Location	Notes *
589-3565	Scintillator	Upper detector	3 years
K433004	Pirani gauge ball	Evacuation system	3 years
J386042	Optical electron image multiplier (Photomultiplier) R6249	Secondary electron detector	5 years
580-4289	Tip	Electron gun	2 years
—	Vinyl hose for cooling water	Evacuation system, Objective lens	5 years
—	Evacuation rubber tube	Evacuation system	5 years
—	PC monitor	PC	3 years
—	Hard disk	PC	3 years
—	Keyboard	PC	3 years
—	Mouse	PC	3 years

NOTE: * Life expectancy (not guaranteed)

10.5.3 Consumables List

The consumables list is shown in **Table 10.5**.

Table 10.5 Consumables List

Part No.	Part	Use	Notes
G370009	Conductive coating	To protect nonconductive specimen from ionizing radiation	30 g/pack
G370250	Metal abrasive	For cleaning vacuum parts	50 g/pack
G743002	Bamboo stick	For cleaning vacuum parts	10 ea/pack
S370061	Cotton	For cleaning vacuum parts	
S370057	Gauze	For cleaning vacuum parts	
S269003	Aluminum foil	For cleaning vacuum parts	
585-4267	Vacuum grease (in tube)	For sealing hermetically (fixed part)	

Part No.	Part	Use	Notes
537-2320	Objective lens aperture plate	0.03, 0.05, 0.1 mm dia.	
—	Acetone	For cleaning	
533-1337	Molybdenum board	For aperture plate baking	
S263001	Polyethylene gloves	For handing the vacuum parts	
L474074	Air filter	To open and close the valve	
45891500	Cooling water filter	To cool off DP/OBJ	

10.6 Operation Check after the Periodic Maintenance

The operation check Items after the periodic maintenance are shown in **Table 10.6**.

Table 10.6 Operation Check Items after the Periodic Maintenance

No.	Item	Operation Check	Result
1	Image quality	Set the accelerating voltage to 1 kV or 30 kV and the magnification to be more than the customer's actual use, and check the image quality.	No distortion must be present.
2	Evacuation system	• Vacuum Measure vacuum for the electron gun, first intermediate and second intermediate chambers with a vacuum meter.	Electron gun 1×10^{-7} Pa or less 1st intermediate chamber 2×10^{-6} Pa or less 2nd intermediate chamber 1×10^{-5} or less
		• Evacuation speed Measure the duration from when the specimen is exchanged to when the high voltage can be applied.	Must be 1 minute or less
		• Evacuation sequence Check that high vacuum can be obtained.	Must operate normally.
3	Each section	• Movable aperture operation check Shift the objective movable aperture and beam monitor aperture from No. 0 to No. 4, and check that they can move smoothly.	Must be able to change between 4 positions smoothly.
		• Specimen exchange Check that the specimen can be moved from the Home Position to the specimen exchange positions. Also, check that the specimen can be exchanged smoothly.	Must move from the Home Position to the specimen exchange position and be exchanged smoothly.

No.	Item	Operation Check	Result
		• Mechanical axis adjustment Check that the electron gun and condenser lenses (first and second) can be aligned smoothly.	Must be able to align smoothly.
4	Safety device	• At power failure, all valves must close. • When the vacuum has degraded, the protection circuit must turn off the HV circuit. • When water flow is interrupted, the HV circuit must be turned off. • If the specimen holder is not inserted in the specimen chamber, HV cannot be applied. • When the compressed air pressure drops below 250 kPa, all valves must close.	Must operate normally.
5	Miscellaneous	• The dry pumps and compressor must be free from abnormal sounds. • The objective lens cooling water must not leak.	Any problems must not be found.

11 Troubleshooting

11.1 Overview of Troubleshooting

The S-5200 SEM is comprised of complex mechanisms and electrical circuits, which can create unexpected problems. Troubleshooting should be performed according to the safety information provided in **Chapter 2**.

11.2 Fault Diagnostics

11.2.1 Dry Pump

Table 11.1 shows a list of dry pump self-test items.

Table 11.1. Dry Pump Fault Diagnostic Items

Symptom	Cause	Action
Pump won't run. The breaker often turns off. When switched on, the pump makes a booming noise and does not start.	Power failure, or voltage declining below 90 V.	Check the power supply.
Vacuum level won't increase.	Vacuum leak due to a faulty vacuum plumbing.	Locate and repair the leaks.
	Contamination inside the vacuum pipes.	Degas the pipes.
	Pipes too narrow or long.	Increase the inner diameter and reduce the length as much as possible.
High noise.	Leaky pipes on the pump suction side.	Repair the leaks.
	★ A strange noise may occur for the first 5 to 6 seconds of evacuation. This is not a problem.	

NOTE: If the dry pump itself should break down, the pump will be disassembled, checked, cleaned, and repaired at a designated factory. Please consult the dealer from whom your system was purchased.

11.2.2 Compressor

Table 11.2 shows a list of compressor self-test items.

Table 11.2. Compressor Self-test Items

Symptom		Cause	Corrective Action
Rotates	No increase in pressure. Takes long time for pressure to rise.	Leaks from the drain or stop valve	If the leak continues after the drain is closed, replace the compressor.
		Faulty packing, screws, or seal	Retighten the unit or replace the packing.
		Faulty safety valves	Replace with a new unit.
		Clogged suction filter	Clean or replace it.
		Worn-out piston ring	Clean or replace it.
		Faulty starting unloader	Repaired at service center.
		Faulty pressure meter indicator	Replace with a new unit.
	Pressure increased beyond the maximum limit	Faulty pressure valves	Adjust or replace it.
		Faulty pressure meter indicator	Replace with a new unit.
	Strange noise	Faulty push-solenoid	Repaired at service center
		Piston air valve impeded	Repaired at service center
		Faulty bearings	Repaired at service center
		Worn-out ridering	Replace the ridering.
		Faulty installation	Install on level floor.
	Motor heats up.	Sliding part burned in	Repaired at service center
		Faulty motor	Repaired at service center
Does not rotate	Motor makes no booming noise.	Faulty pressure valves	Replace.
		Protector turned on	Pause and restart.
	Motor makes a booming noise.	Decrease in voltage	Replace the wires with standard wires.
		Air valve leaks.	Replace with a new unit.
		Faulty starting unloader	Repaired at service center

NOTE: When requesting repair service, please provide the following information:

1. Model 2. How the problem occurred 3. Your address

11.2.3 VRT Board

LED Display on the ECPU247 Board (CPU)

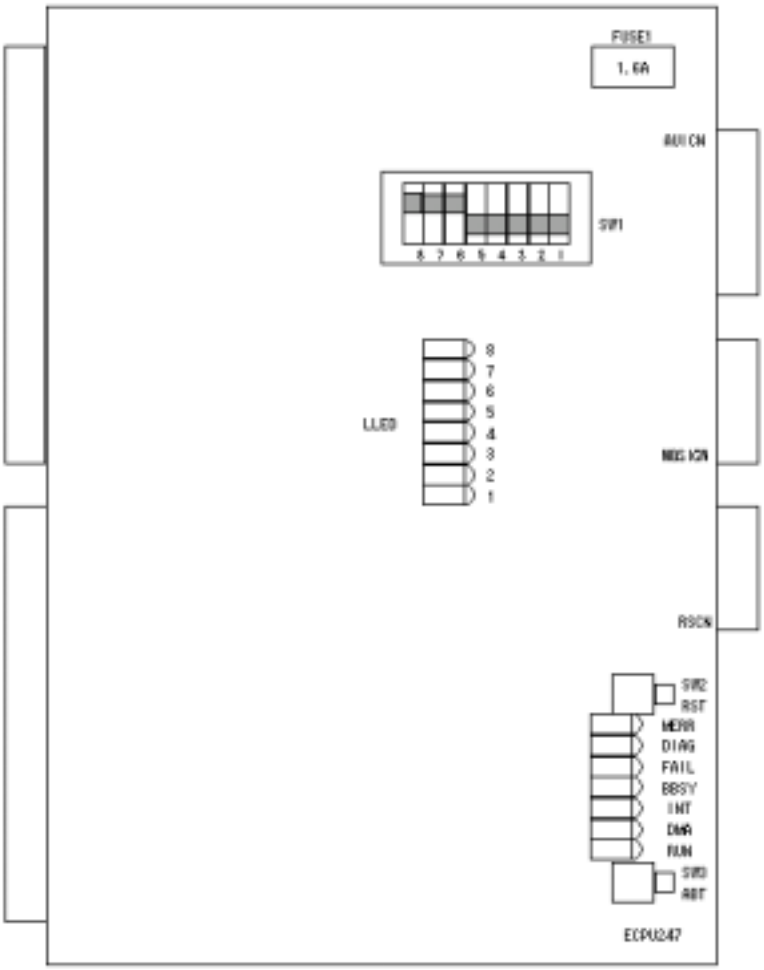

ECPU247 Board

LED

Silk Screen	Color	Description	Normal Status
RUN	Green	CPU running	Lamp ON
DMA	Green	I/O got DMA bass right	Lamp ON at DMA
INT	Green	Interruption occurred	Lamp ON when interruption occurs

Silk Screen	Color	Description	Normal Status (after self-analysis)
LLED-1	Green	During self-analysis	Lamp OFF
LLED-2	Green	During self-analysis	Lamp OFF
LLED-3	Green	During self-analysis	Lamp OFF

Silk Screen	Color	Description	Normal Status
MBSY	Green	Memory bus busy	Lamp ON during Memory bus use
FAIL	Red	CPU halted	Lamp OFF
DIAG	Red	Lamp flashes: Self-analysis error Lamp ON: Boot error	Lamp OFF
MERR	Red	Parity error	Lamp OFF

Silk Screen	Color	Description	Normal Status (after self-analysis)
LLED-4	Green	During self-analysis	Lamp OFF
LLED-5	Green	During self-analysis	Lamp OFF
LLED-6	Green	During self-analysis	Lamp OFF
LLED-7	Green	During self-analysis	Lamp OFF
LLED-8	Green	During self-analysis	Lamp OFF

Self-analysis

After the reset starts, analyze the I/O function in the board. During self-analysis, [LLED] flashes and when the analysis result is normal, [DIAG] LED turns OFF. If the analysis result is not normal, [DIAG] LED flashes and the coded analysis result will be stored in a specific address ($0000F0) in the main memory.

No.	Error Code	Description
1	$00	No error
2	$A0	MPU register check error
3	$A1	EPROM sun check error
4	$A3	Control register function error
5	$A4	DMAC register error
6	$A5	DMACC interruption check error
7	$A8	PTM register check error
8	$A9	PTM interruption check error
9	$AA	Memory protection function error
10	$AD	Main memory error
11	$B4	RTC register check error
12	$B6	EEPROM check error
13	$BB	FDC register check error
14	$BC	SPC register check error
15	$BD	MBSI check error

NOTE: Because the memory that stores self-analysis is backed-up with battery, if self-analysis error occurs, do not remove the battery and carry it without putting it in the conductive bag.

NSEM200/NMEM200/NOPD100 Board (Image Memory Board) LED

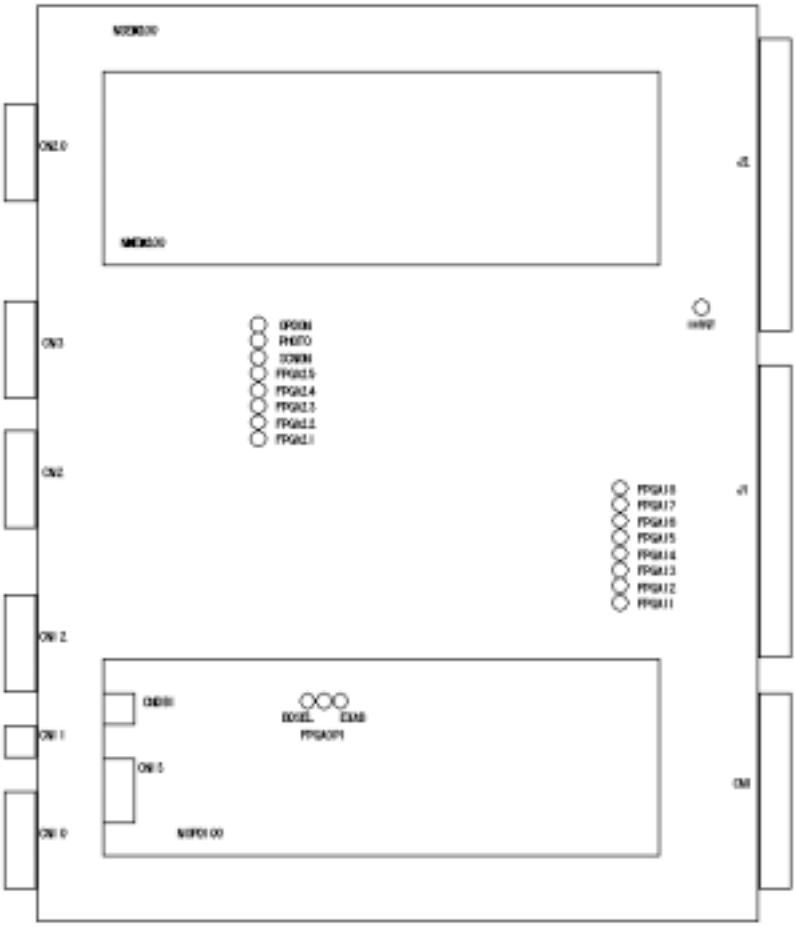

NSEM200/NMEM200/NOPD100 Board

LED

NSEM200

Silk Screen	Color	Description	Normal Status
FPGA11	Red	FPGA load error	Lamp OFF
FPGA12	Red	FPGA load error	Lamp OFF
FPGA13	Red	FPGA load error	Lamp OFF
FPGA14	Red	FPGA load error	Lamp OFF
FPGA15	Red	FPGA load error	Lamp OFF
FPGA16	Red	FPGA load error	Lamp OFF

Silk Screen	Color	Description	Normal Status (after self-analysis)
FPGA21	Red	FPGA load error	Lamp OFF
FPGA22	Red	FPGA load error	Lamp OFF
FPGA23	Red	FPGA load error	Lamp OFF
FPGA24	Red	FPGA load error	Lamp OFF
FPGA25	Red	FPGA load error	Lamp OFF
IHOST	Green	CPU load error	Lamp ON when activated

Silk Screen	Color	Description	Normal Status
FPGA17	Red	FPGA load error	Lamp OFF
FPGA18	Red	FPGA load error	Lamp OFF

Silk Screen	Color	Description	Normal Status (after self-analysis)
OPDO	Green	Display option	Lamp ON when loaded
PHOTO	Green	Photo output	Lamp ON at photo output
SCNON	Red	Scan timing signal input	Lamp ON at signal input

NOPD100

Silk	Color	Description	Normal Status
BDSEL	Green	FPGA load error	Lamp OFF
EXAB	Green	Double image retrieval display	Lamp ON when displaying
EPGAOP1	Red	Option board memory selection	Lamp ON when selecting

11.3 Stage

11.3.1 Malfunction

Errors are displayed on an axis-by-axis basis.

E-2 indicates an error in the amp unit.

Error on the X-axis: X-axis display unit

Error on the Y-axis: Y-axis display unit

If an error occurs only on one of the two axes, the axis that does not have an error displays the current value “as is”.

<Restoring the Origin>

When started or reset, the system X-Y Stage controller returns to the origin as follows:

1. The X- and Y-axes simultaneously begin to move to the origin.
2. The origin is detected from one direction as shown below
3. After the move to the origin is complete, the X-Y Stage controller transmits its status.
4. The maximum moving speed is 200 kpps.

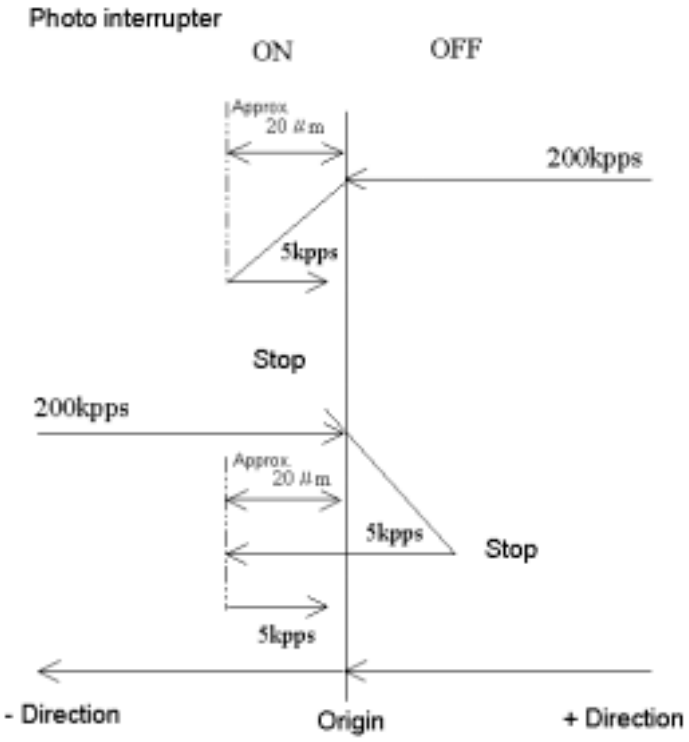

11.3.2 Protection Function

Amplifier Error Detection Function

Cause	Detected Parameter Value	Detected Problem	Post-detection Action
Power outage	Drop in supply voltage	• Power input less than 14 V	• Servo off • Indicator lamp (LD-4204) is lit; indictor panel E-2 is lit.
Over-speed	Excessive output voltage (armature voltage)	• Motor fault and motor connection error (wire, bad polarity, poor conduction) • Encoder connection error (line breakage, A/B phases connected in reverse, poor conduction) • Encoder damaged (A, B phase problem) • Encoder not connected **NOTE: For an XY stage controller, the maximum output voltage is DC 23V relative to an input voltage of DC24V. Therefore, the XY stage controller is set to a non-operating value.**	

Cause	Detected Parameter Value	Detected Problem	Post-detection Action
Overload	Excessive output current (armature current)	• Motor overload **Note: The detected parameter is subject to an inverse time limit characteristics such that tf(I)=CONSTANT, as illustrated in Figure 5-27.** 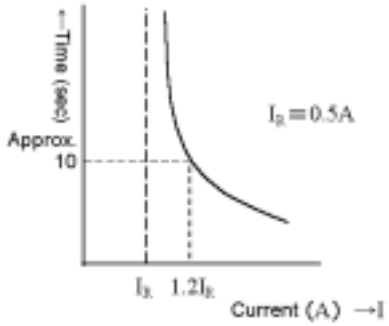 **Figure 5-27**	• Servo off • Indicator lamp (LD-2303) is lit; indictor panel E-2 is lit.
Over-heating	Excessive rise in output-stage power transistor temperature	• Controller overload (used continuously under an allowable output current anomaly) • Abnormal rise in ambient temperature • Abnormal rise in temperature due to poor radiation • Overheating due to a power transistor failure	• Servo off • Indicator lamp (LD-2303) is lit; indictor panel E-2 is lit.
Over-current	Excessive output current	• Shorting between motor output pins • Motor coils	• Servo off • Indicator lamp (LD-2202) is lit; indictor panel E-2 is lit.
Overflow	Excessive reserve pulse in the deviation counter (±6144 pulses)	• Abnormal F/V voltage adjustment • Abnormal motor response (motor locked, falling torque) • Control board error	• Servo off • Indicator panel E-2 is lit.

Amplifier Indicator Lamps

The amplifier is equipped with the LED indicator lamp to indicate the operational condition.

Symbol	Color	Display
LD-8	Green	Power ON
LD-1201	Green	Controller enabled (servo ON)
LD-4204	Red	Stop-on-power failure function running
LD-2202	Red	Stop-on-over-speed function running
LD-3203	Red	Stop on overload/overheat/overcurrent function running
LD-5205	Green	In-position state

11.3.3 Stage Adjustment

Problem

When the power or the Reset SW is turned on, sometimes an ERROR-2 error occurs during low-speed operation, which can cause a system malfunction. (In some cases, by turning the power or the Reset SW on again, the system may return to normal.)

Cause

- The input command voltage for the V/F (voltage/frequency) conversion circuit IC in the stage controller sags during low-speed operation due to a temperature drift, which causes an impaired pulse transmission condition.
- In the controller board circuits, the V/F converter is output only when the operating speed command output becomes a positive voltage at point A in the OPAMP at the lowest speed. However, a temperature increase or other changes in the ambient conditions around the controller cause a negative voltage, which hinders low-speed motions, thus generating an ERROR-2 error.

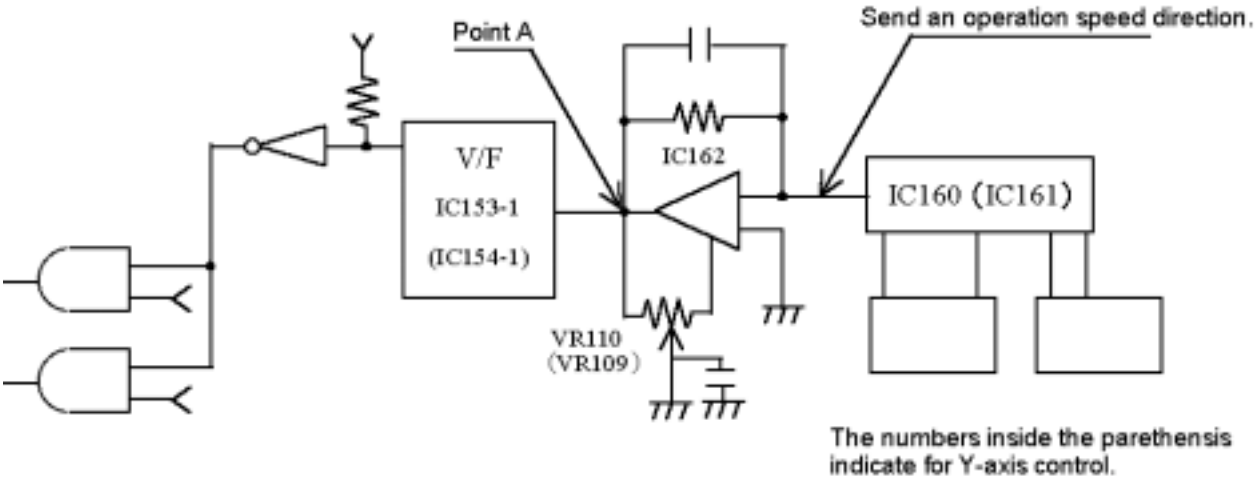

Adjustment Procedures

1. Do not make these adjustments immediately before or after the power is turned on. Instead, they should be performed at least 30 minutes after the power is turned on.
2. Connect a frequency monitor (e.g., a synchroscope) to the X- and Y-axes.

   X-axis: IC153-1 – GND (IC153-2)
   Y-axis: IC154-1 – GND (IC154-2)
3. Turn the offset adjustment VR in the direction shown in the figure.

   X-axis: VR110
   Y-axis: VR109
4. After the power is turned on, restore the power (depress the Reset SW).
5. After the stage returns to the origin and the motor stops, use the offset VR to adjust the VR110 and VR109 so that the V/F output will be 50 Hz (50 pulses).

11.3.4 Self-test and Corrective Action

If a fault of malfunction should occur, take corrective action according to the following diagnostic flowchart.

The actuator won't run.

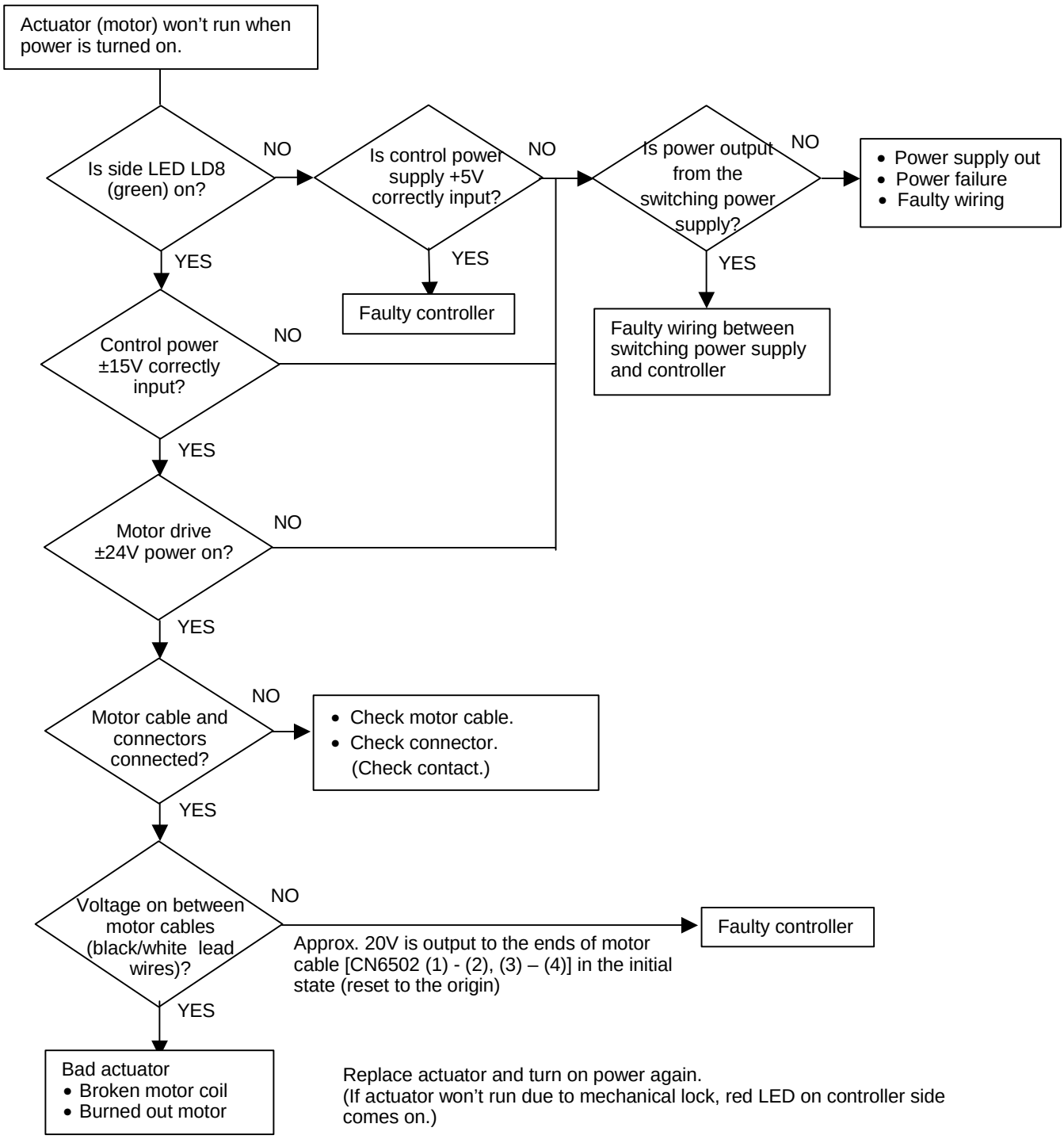

Actuator (motor) runs erratically.

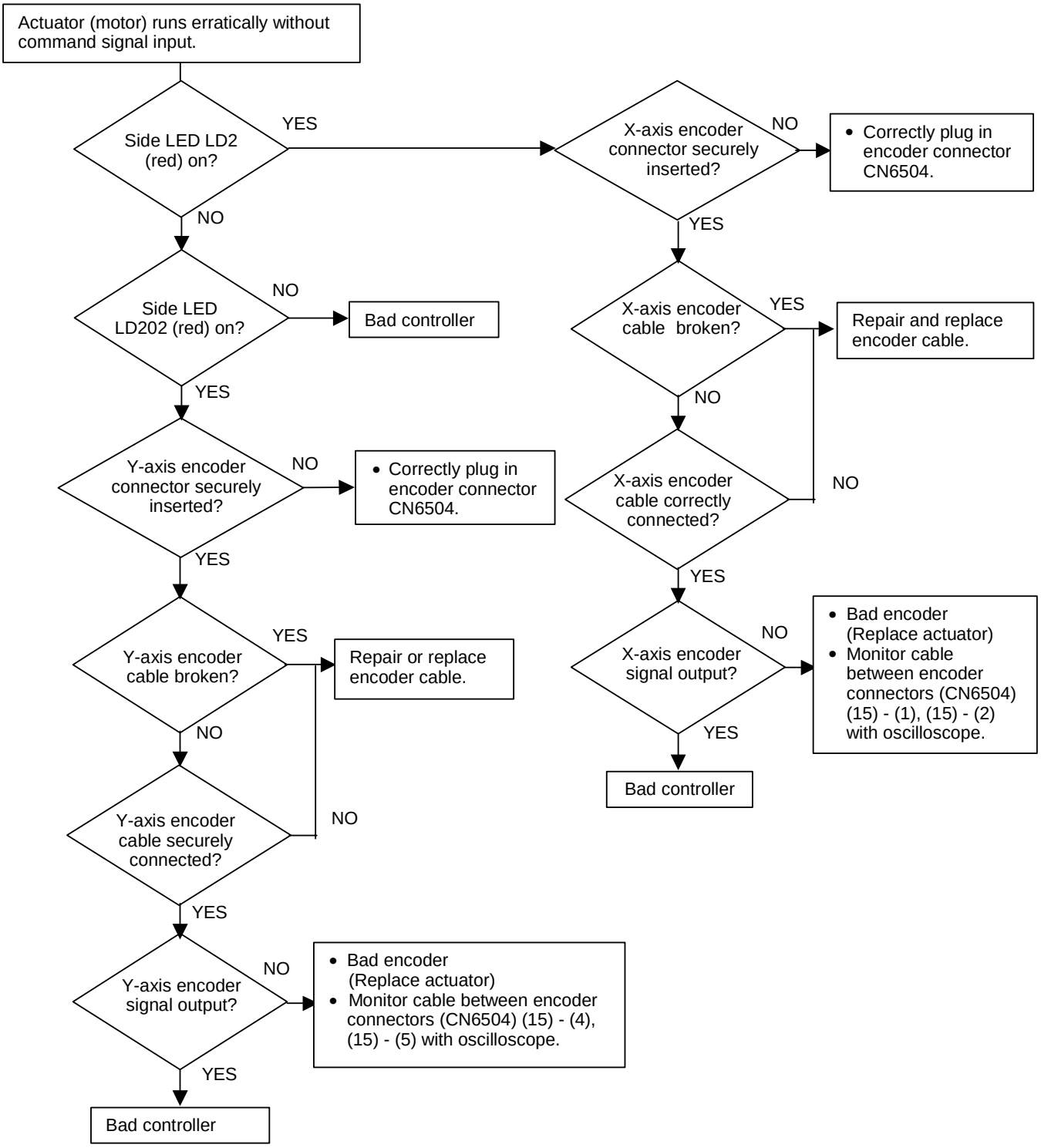

Actuator (motor) won't stop at origin.

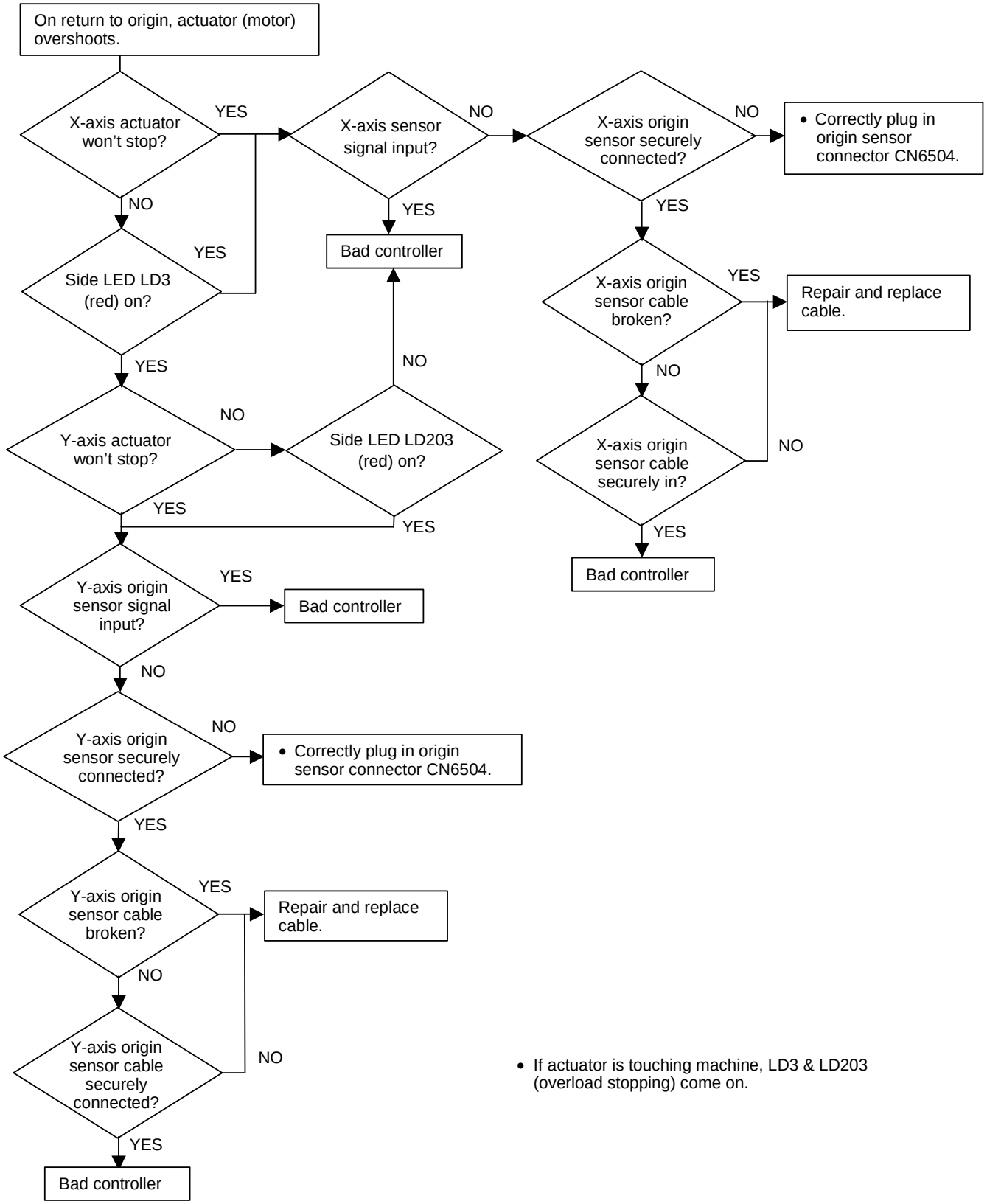

Actuator (motor) stops at origin, but indicator does not show [0.000].

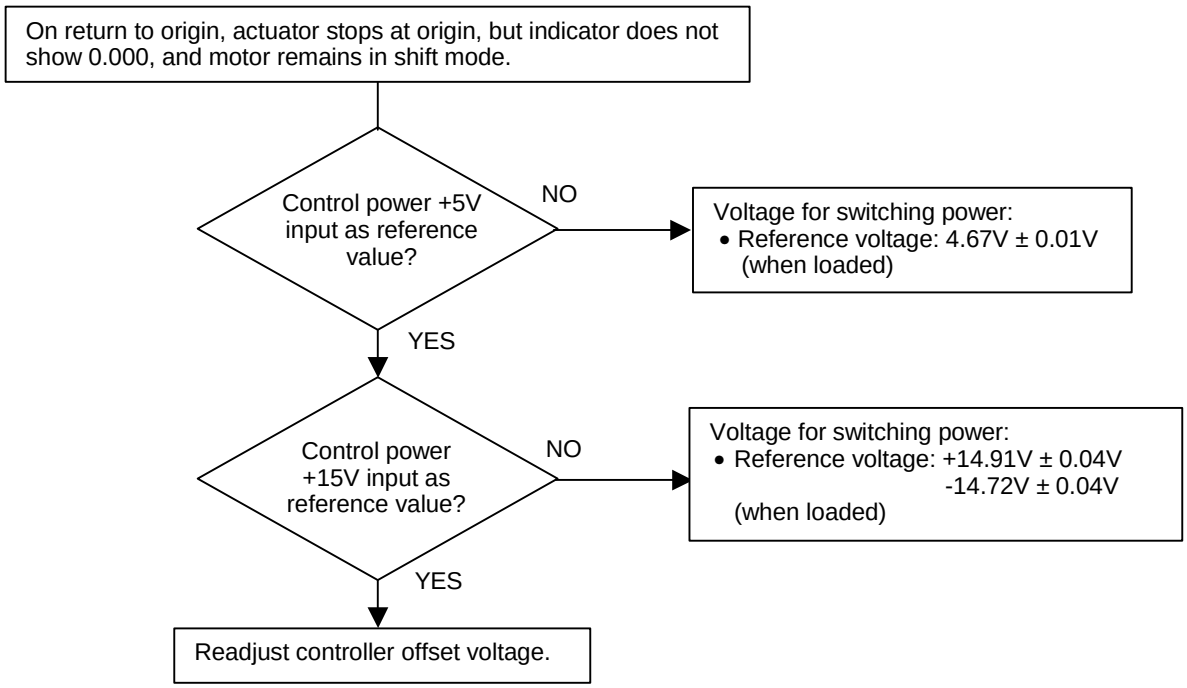

Controller resets itself.

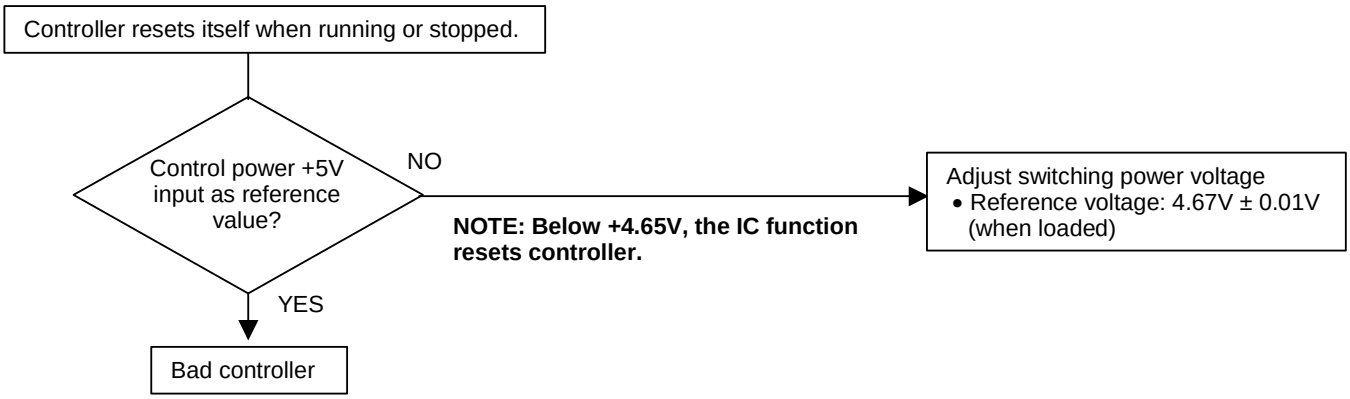

Actuator (motor) stops.

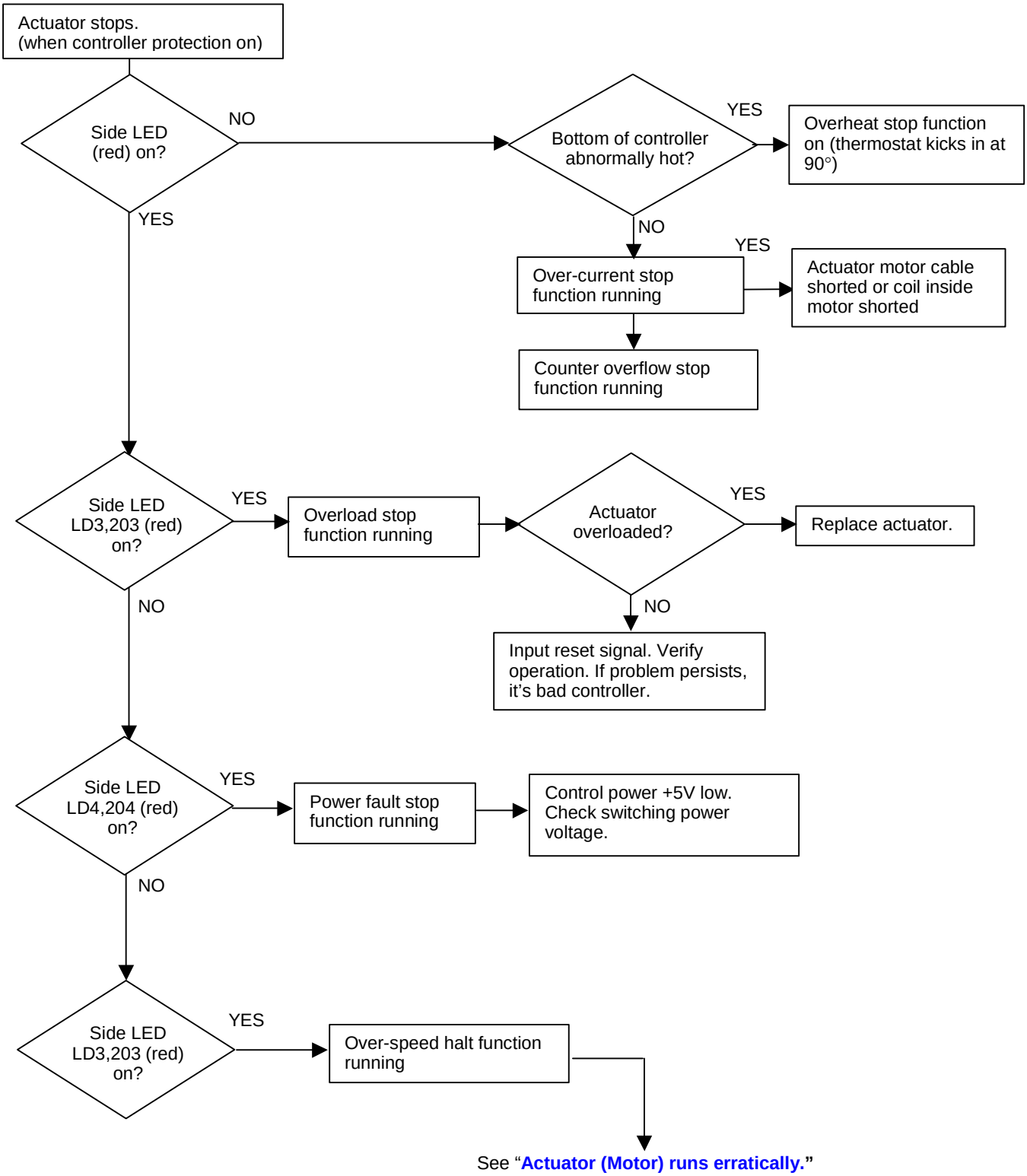

11.4 Error Messages

11.4.1 EVAC SEQ Error Codes

Table 11.3. EVAC SEQ Error Codes

Code	Cause	Status	Countermeasure
E 01	Failure on the DC power supply (+24 V)	Evacuation system will stop.	Pull out the specimen holder to the entrance of the specimen exchange chamber, and turn the EVAC POWER switch off. Then, turn it on again. If the error occurs again, contact a service engineer.
E 03	Over heating of a transformer in the power supply (the temperature sensor is an optional accessory)	Evacuation system will stop.	Pull out the specimen holder to the entrance of the specimen exchange chamber, and turn the EVAC POWER switch off. Wait for about 30 min, and check the cooling water supply. Then, turn the EVAC POWER on. If the error occurs again, contact a service engineer.
E 04	Over heating of the dry pump (the temperature sensor is an optional accessory)	Evacuation system will stop.	Pull out the specimen holder to the entrance of the specimen exchange chamber, and turn the EVAC POWER switch off. Wait for about 30 min. Then, turn the EVAC POWER on. If the error occurs again, contact a service engineer.
E 05	The dry pump stopped.	Evacuation system will stop.	Pull out the specimen holder to the entrance of the specimen exchange chamber, and turn the EVAC POWER switch off. Check if the dry pump circuit breakers are on. Wait until the turbo molecular pump stops. Then, turn the EVAC POWER on. If the error occurs again, contact a service engineer.
E 06	Blown out the fuse connecting to the penning gauge unit.	Evacuation system will stop.	Pull out the specimen holder to the pre-pumping position, and turn the EVAC POWER switch off. Then, replace the fuse and turn the EVAC POWER switch on again. If the error occurs again, contact a service engineer.
E 07	The turbo molecular pump stopped. (TMP-2) (The turbo molecular pump of 50 liter/second is an optional accessory)	Evacuation system will stop.	Turn the EVAC POWER switch off. Wait until the turbo molecular pump stops. Then, turn the EVAC POWER on. If the error occurs again, contact a service engineer.
E 08	The turbo molecular pump stopped. (TMP-1)	Evacuation system will stop.	Turn the EVAC POWER switch off. Wait until the turbo molecular pump stops. Then, turn the EVAC POWER on. If the error occurs again, contact a service engineer.

Code	Cause	Status	Countermeasure
E 12	Flow of the cooling water is larger than specified rate. (The water lamp blinking)	The evacuation system will be working normally. The cooling water is used for cooling the objective lens.	Check the cooling water supply. The Water lamp is lit when water is supplied.
E 13	Flow of the cooling water is smaller than specified rate. (The water lamp goes out)	The evacuation system will be working normally. The cooling water is used for cooling the objective lens. Objective lens current will be shut off.	Check the cooling water supply. The Water lamp is lit when water is supplied.
E 14	Insufficient air pressure for the pneumatic valves.	The Air lamp on the evacuation control panel will be off. The power of the turbo molecular pumps will be shut off.	When the system is using an air compressor, check its power supply and pressure. When using house air, check the source of the air pressure. The system will recover when the air recovers at specific pressure.
E 17	S.E.C.AIR switch is on when the specimen holder is in the specimen chamber.	All valves are closed.	Pull out the specimen holder to the entrance of the specimen exchange chamber. Or set to EVAC the EVAC/AIR switch on the specimen exchange chamber.
E 18	S.C. LOCK switch on the evacuation control panel is released when the specimen holder is in the specimen chamber	Alarm buzzer only.	Pull out the specimen holder to the entrance of the specimen exchange chamber. Or set to LOCK the S.C. LOCK switch on the evacuation control panel.
E 19	The specimen holder is not at the entrance of the specimen exchange chamber when EVAC process was started.	The evacuation system will not be working normally.	Pull out the specimen holder to the entrance of the specimen exchange chamber.
E 20	S.C. LOCK switch on the evacuation control panel is set to LOCK when the specimen chamber is in the air leak process.	Alarm buzzer only.	Release the S.C. LOCK switch on the evacuation control panel until air leak is completed.
E 25	EVAC power is on when the specimen holder is out the specimen chamber.	The evacuation system will not be off.	Insert the specimen holder to the entrance of the specimen exchange chamber.
E 31	Gun baking was started while the HV cable head is not removed.	Gun baking power supply is shut off.	Press the Baking stop switch. Remove the HV cable from the electron gun and insert it to the HV cable holder at the side of the display unit. And then start gun baking again.
E 32	Covers around the electron gun are not attached.	Gun baking power supply is shut off.	Press the Baking stop switch. Attach covers to the electron gun part. And then start gun baking again.
E 33	Over heating of baking heaters. (when optional temperature sensor is installed)	Baking power supply will be shut off.	Stop gun baking. Contact a service engineer.

Code	Cause	Status	Countermeasure
E 34	Ion pump 1 power supply is shut off while gun baking. The gun baking may cause deterioration of gun vacuum and in some cases ion pump power supply will be shut off.	Baking power supply will be shut off.	Stop gun baking. Wait for a few hours. Restart ion pumps. And then, start gun baking again.
E 35	Ion pump 1 vacuum degraded.	When vacuum of the ion pump 1 degraded to lower than the specified value, baking power supply will be stopped.	Stop gun baking. Wait for a few hours. Restart ion pumps. And then, start gun baking again.
E 36	Cover around the trap heat is not attached. (the trap heat is an optional accessory)	Trap heat power supply is shut off.	Press the Trap Heat stop switch. Attach covers to the trap heat part. And then start trap heat again.
E 37	Gun baking was started while the ECO mode is carrying out.	Baking power supply will be shut off.	Stop gun baking. Wait for a few hours. Restart ion pumps. And then, start gun baking again.
E 38	Baking timer is not correct. (Condition INNER TIME > OUTER TIME + 2)	Baking power supply will be shut off.	Press the Baking stop switch. Set the baking timer correctly, and then start gun baking again.
E 51	Failure of the PI1		Contact a service engineer.
E 52	Failure of the PI2		Contact a service engineer.
E 97	EVAC power is off when the specimen holder is in the specimen chamber.	The evacuation system will not be off.	Pull out the specimen holder to the entrance of the specimen exchange chamber.
E 99	Error of ECO mode caused by: 1. EVAC power off 2. The specimen holder is in the specimen chamber. 3. While the baking is carrying out. 4. SEC EVAC/AIR switch is set to AIR. 5. Timer setting is failed	ECO mode will not start.	Settle the problem, and then start ECO mode

11.4.2 Software Error Code

Table 11.4. Error Messages

Host

Error Code	Message	Cause & Remedy
1001 to 1008	Cannot execute at scan speed xxxx	These messages will be shown when the operation is inhibited with the present scanning speed. Change scanning speed and then, do the operation again.
1009 to 1030	Now running in xxxx Mode Executing xxxx xxxx ing	These messages will be shown when the operation is inhibited with the present scanning mode or the present executing function. Change scanning mode or wait until the present executing function ends. Then, do the operation again.
2000	Invalid input data	This message will be shown when input data is not correct. Confirm acceptable data and then, input again.
2001	Invalid data (out of range)	This message will be shown when input data is too large or too small. Confirm acceptable range of data and then, input again.
2002	Only a number is acceptable	This message will be shown when you input keys other than numerals.
2003	Invalid Data	This message will be shown when input data is not correct. Confirm acceptable data and then, input again.
2004	The name is used in the system.	S-5200 uses this login name. Use other name.
2005	Specified value is invalid. Set the value so as to satisfy the following equation. [MeasurementPoint-1] × [MultiPitch] + [MeasurementPitch] × [SummingLine] <= 480	[CD Measurement option] Combination of parameters results in number of measurement lines. Change parameters following the equation shown in the message.
2007	Invalid login name	Use a login name already registered. “S-5200” is the default login name. Note that capital and small letters are distinguished for login names. Confirm your input.
2008	The password you typed is incorrect.	You entered incorrect password. Note that capital and small letters are distinguished for login names. Confirm your input.
2010	Specified file is different from the condition file for S-5200. SEM Parameters will be initialized.	The file for operation condition is not correct. If this message is shown, check if other application is using files of extension “pm1” or “pm2”.
2016	Specified file not moved because source and destination directories are the same.	This message will be shown when you have specified the same directory as of the source files for the target directory in Batch Process-Move File command. Specify other directory than that of source files for the target directory.

Error Code	Message	Cause & Remedy
2017	xxxx is already Exist.	This message will be shown when the input User name (or login name) is already used. Specify other name.
2031	Use at Magnification lower than × 5,000.	This message will be shown when you click the Get Image button at a higher magnification than ×5,000.
2032	Time-out error.	This message will be shown when operations such as auto focusing did not end within specified period. If it happens frequently, contact a service engineer.
2040	This is not 8 bits image file.	Some commands in the SEM Data Manager handle 8 bit gray scale images only.
2041	The size of image exceeds the maximum resolution 2560 × 1920.	Some commands in the SEM Data Manager handle maximum of 2560 × 1920 pixels.
2042	Image size is not available except 640 × 480, 1280 × 960, 2560 × 1920	Image transfer to Scanning Image window and photo replay support the three image sizes shown in the message only.
2045 to 2047	Captured images in memory areas of xxxx will be deleted. Are you sure?	Image transfer to Scanning Image window and photo replay use image memory for storing captured image. This message is shown when the necessary area is not empty. If you need the captured images in specified areas, click No button and save these images. And then, use the image transfer or photo replay command.
2060	Insufficient memory space in a temporary drive. At least 20 MB free area is necessary for startup.	This message will be shown when vacant area of the hard disk is not enough for the process to be executed. Delete unnecessary files and keep more space than specified.
2061	Insufficient memory space in a temporary drive. At least 5 MB free area is necessary for executing this process.	This message will be shown when vacant area of the hard disk is not enough for the process to be executed. Delete unnecessary files and keep more space than specified.
2062	Insufficient memory space in a temporary drive. At least 10 MB free area is necessary for executing this process.	This message will be shown when vacant area of the hard disk is not enough for the process to be executed. Delete unnecessary files and keep more space than specified.
2065	Free space in temporary drive is 30 MB or less. System may become unstable. Please quit S-5200 program and free up the disk space.	This message will be shown when vacant area of the hard disk is not enough for the process to be executed. Delete unnecessary files and keep more space than specified.
2101	Please input file name.	Input a file name and then, click the Save Button.
2102	Please input user name	Input or select a user name and then, click the Save button.
2105	Auto increment counter has reached 99. Please use another file name	Quick saving allows up to 99 files for a name. Use another file name.
2107	Please input comment.	[CD Measurement option-Calibration] Input a comment before clicking the Apply button.
2108	File name is duplicated.	This message will be shown when you have specified a file name already used. Use other name.

Error Code	Message	Cause & Remedy
2109	File name is too long..	Up to 255 characters are acceptable for a file name including drive name, folder name, and extension.
2110	User table is not empty. Delete all lists or images by using Remove List Command or Delete Image Command before deleting User table.	To delete a user name, image lists in the user table shall be empty. Use Batch Process-Remove List command (removes database list only) or Delete Image command (deletes images).
2120	A number of written items exceed the maximum. Carry out Combine.	Number of texts or graphics exceeds allowable number. Delete some of texts or graphics to add new one. Or once execute combine command and save the image to add new data in the image.
2121	The number of written items exceeds the maximum. More items cannot be input.	Number of texts or graphics exceeds allowable number. Delete some of texts or graphics to add new one.
2130	Number of tool buttons is out of range. Please delete less important buttons.	Not all buttons are able to be placed in the toolbar. Select buttons you will use frequently.
2140	Invalid file name.	The file name possibly includes characters not allowed (/ : , ; * ? “ < > |).
2141	File name is too long. Up to 255 characters are acceptable for a file name including folder name.	Use file name shorter than 255 characters including folder name and extension.
2142	Invalid User name.	The User name possibly includes characters not allowed (/ : , ; * ? “ < > |).
2143	User name is too long. Up to 64 characters are acceptable.	Use User name shorter than 64 characters.
2144	Invalid Sample name.	The Sample name possibly includes characters not allowed (/ : , ; * ? “ < > |).
2145	Sample name is too long. Up to 40 characters are acceptable.	Use Sample name shorter than 40 characters.
2146	Invalid Keyword.	The Keyword possibly includes characters not allowed (/ : , ; * ? “ < > |).
2147	Keyword is too long. Up to 20 characters are acceptable.	Use Keyword shorter than 20 characters.
2149	Comment is too long. Up to 80 characters are acceptable.	Use Comment shorter than 80 characters.
2200	The new and confirmed passwords do not match. Please type them again.	Input both new and confirmation passwords again. Note that capital and small letters are distinguished.
2202	Cannot delete this login name.	This login name is not allowed to delete.
3001	Written data will be combined into image. OK?	This message will be shown for confirmation.
3002	Written data will be transferred into bitmap area for photograph. OK?	This message will be shown for confirmation.

Error Code	Message	Cause & Remedy
3003	Caution! All captured images will be deleted. Are you sure?	This message will be shown when All Clear button in the captured Image window is clicked or when you change capture resolution for confirmation.
3004	Exit SEM Manager. OK?	This message will be shown for confirmation.
3010	XXXX already Exist. Overwrite?	This message will be shown when the file name for saving already exists. If you click the OK button, the file will be overwritten.
3011	XXXX will be deleted. Are you sure?	This message will be shown for confirmation. Click Cancel button if you do not want to delete it.
3013	XXXX will be deleted (moved former files). Are you sure?	This message will be shown for confirmation if the original file may be deleted after moving it.
3015	~ already Exist. Overwrite? (Yes: Overwrite, No: Save by using different name.)	This message will be shown when saving the image on the SEM Data Manager. Click Yes to overwrite. When you click the No button, the Save Image dialog window will be shown for saving the image with new file name.
3016	~ already Exist. Overwrite? (Yes: Overwrite, No: Append into the existing file.)	This message will be shown when the specified file name for saving measured data already exists. If you click the Yes button, the existing data in the file will be overwritten by new one. If you click the No button, the existing data in the file will be kept and new data is added following the existing data.
3021	Caution! After deleting data, it cannot be accessed by any other user table it is registered in. Are you sure?	When images are registered in multiple user names, deleting, moving or renaming the images on a user may cause troubles when opening the images on other user names. When this happens, removing the images using Batch Process-Remove List command from the users will solve the troubles.
3022	Caution! After moving data, it cannot be accessed by any other user table it is registered in. Are you sure?	When images are registered in multiple user names, deleting, moving or renaming the images on a user may cause troubles when opening the images on other user names. When this happens, removing the images using Batch Process-Remove List command from the users will solve the troubles.
3023	Caution! After renaming data, it cannot be accessed by any other user table it is registered in. Are you sure?	When images are registered in multiple user names, deleting, moving or renaming the images on a user may cause troubles when opening the images on other user names. When this happens, removing the images using Batch Process-Remove List command from the users will solve the troubles.
3030	Print both A and B images?	This message will be shown when Printing images in Dual Screen mode. When you click the No button, the image on the screen specified by the Record A/B buttons will be printed.

Error Code	Message	Cause & Remedy
3040	HV will be turned off. OK?	This message will be shown when closing the program while HV is still ON. If you click the OK button, HV will be shut Off.
3100	Would you save measurement data?	This message will be shown when closing the CD Measurement without saving measured data. Click Yes and save data if it is necessary.
3200	Please insert additional option disk.	Insert the option disk following the message.
3201	Delete this option. Are you sure?	This message will be shown for confirmation.
3210	The password has been successfully changed.	This message shows that the password has been changed.
3220	Preset count has been passed.	Number of cell counting was over.
3502	Current Holder Type and Sample Height Mode are set to the above conditions. Please change the condition with the corresponding dialog Window if the above setting are different from the actual ones. [Caution] The sample holder may touch the objective lens if an incorrect Holder Type is selected. Holder Type:	This message will be shown when applying HV. Check if the current Specimen Holder Type and Sample Height Mode in the message are correct.
3503 3506 3508	The combination of the present accelerating voltage and Sample Height Mode which has been selected is not allowed. Change the settings so that the following relation is satisfied	Change the setting of Sample Height mode or accelerating voltage.
3600	It is necessary to carry out the maintenance of the scroll pump used with the S-5200 within 1 month. Please contact to the nearest service organization and carry out the maintenance by the following date.	Carry out the maintenance of the scroll pump.
3601	The time has exceeded the date when the maintenance of the scroll pump is required. Please shutdown the evacuation system of the S-5200 and carry out the maintenance of the scroll pump. Please contact to the nearest service organization for the maintenance of the scroll pump.	Shutdown the evacuation system and carry out the maintenance of the scroll pump.

Error Code	Message	Cause & Remedy
3802	Overwrite captured image in memory area of No.~. Are you sure?	This message will be shown for confirmation when you select a capture area where image already exists, or when you capture an image when image exists in the next capture area.
3810	Delete Calibration No.~. Are you sure?	This message will be shown for confirmation when you delete a calibration data.
3815	A date of the maintenance for the scroll pump will be update to the following date. Are you sure?	Check the date of the maintenance for the scroll pump, and click the OK button.
3901	The limit is ~ bytes.	You entered too long a login name or password.
4200	Option disk is invalid.	The option disk is not for this instrument. Use the correct disk.
4201	Serial number is invalid.	The serial number is incorrect. Or the option disk is not for this instrument.
4300	Failure in auto focus.	This message will be shown when auto focusing failed in focus detection. Check if the observed specimen has fine surface structure, the image brightness or contrast is adequate, or the OBJ aperture is aligned correctly.
4301	Failure in auto stigma.	This message will be shown when auto stigma failed. Check if the observed specimen has fine surface structure, the image brightness or contrast is adequate, the OBJ aperture is aligned correctly or stigma alignment is adjusted correctly.
4500	Input value or measured value is not correct.	This message will be shown when ratio of correct value and measured value in the calibration operation is out of range.
4501	Magnification is out of step range. Please adjust magnification.	Magnification is set in stepwise by magnification operation and also changed finely by focusing operation. Calibration of measured data is possible only when the step- set magnification value. When this message is shown, once make magnification operation using mouse on the magnification area or using the knob on the operation panel (option). And then, continue measurement operation.
4502	Please execute calibration.	This message will be shown when you click the Apply button before the Calibration Factors are calculated.
4700	Communication time out error between SEM and STAGE. Please check the wiring for RS-232C and re-start the system.	This message will be shown when the control of the motorized stage failed. Try once to restart the display unit and the stage controller.

Stage

Error Code	Message	Cause & Remedy
5000	X-axis parameter error (Max)	The axis position is at the limit. You can drive the stage towards reverse direction.
5001	X-axis parameter error (Min)	
5002	Y-axis parameter error (Max)	
5003	Y-axis parameter error (Min)	
5006	T-axis parameter error (Max)	The axis position is at the limit. You can drive the stage towards reverse direction.
5007	T-axis parameter error (Min)	If it happens frequently, contact a service engineer.
5020	Cannot execute while drive X-axis	Possibly the initialization is in progress. Wait for a few minutes.
5021	Cannot execute while drive Y-axis	If the message is shown even when about 10 minutes have passed, shut the stage power off once and then turn it on.
5023	Cannot execute while drive T-axis	
5025	Cannot execute while drive stage by track ball	This message will be shown when operation on the GUI and by the track ball are generated simultaneously.
5026	Cannot execute while drive stage by panel	This message will be shown when operation on the GUI and by the operation panel are generated simultaneously.
5040	Cannot execute while not initialize X axis	Initialization of the axis is in progress.
5041	Cannot execute while not initialize Y axis	Wait until initialization ends.
5043	Cannot execute while not initialize T axis	
5075	Stage over run error (X-CCW)	These messages will be shown when the axis is driven over its limit. It will be recovered automatically.
5080	Stage over run error (X-CW)	
5085	Stage over run error (Y-CCW)	
5090	Stage over run error (Y-CW)	
5101	Stage over run error (Z-CCW)	
5102	Stage over run error (Z-CW)	
5103	Stage over run error (T-CCW)	
5104	Stage over run error (T-CW)	
5200	Specimen exchange position error (X) (Allowable value : 10 µm)	This message will be shown when the stage can not be set at the home position correctly.
5201	Specimen exchange position error (Y) (Allowable value : 10 µm)	Restart the stage power switch. If this happens frequently, contact a service engineer.
5203	Specimen exchange position error (T) (Allowable value : 0.1 deg)	
5365	Time out error (X-axis)	This message will be shown when the operation does not end within specified time period.
5366	Time out error (Y-axis)	If the message is shown frequently, contact a service engineer.
5368	Time out error (T-axis)	

Error Code	Message	Cause & Remedy
5400	X-axis is out of range (MAX) Please check sample size with Stage Control Window	This message will be shown when the present position data is out of the movable area of the axis. If the message is shown frequently, contact a service engineer.
5401	X-axis is out of range (MIN) Please check sample size with Stage Control Window	
5402	Y-axis is out of range (MAX) Please check sample size with Stage Control Window	
5403	Y-axis is out of range (MIN) Please check sample size with Stage Control Window	
5406	T-axis is out of range (MAX)	
5407	T-axis is out of range (MIN)	
5982	Stage presently moving	Internal error message. Ignore it. Click OK.
6510	Host not found.	An error occurred while transferring files to or from a remote computer. Check corresponding setting.

HV, Evacuation System

Error Code	Message	Cause & Remedy
7012	HV forced OFF due to one of the following items. Cause : Degradation of vacuum. Safety protection activated. Setting the specimen holder at the entrance of the specimen exchange chamber.	This message will be shown when the HV is shut off by degradation of the vacuum, safety protection activated, or setting the specimen holder at the entrance of the specimen exchange chamber. First check if the specimen holder is in the specimen chamber. Next check the ion pump vacuum. If the ion pump vacuum is not good, wait until the vacuum of ion pumps recovers to the specified value (HV indication will start blinking in yellow). And then, turn the HV on. If this message is shown frequently, contact a service engineer.
7030	Emission current limit error	This message will be shown when HV is shut off by emission current limiter. Make flashing operation and then, turn HV on. If this message is shown frequently, contact a service engineer.
7100	Long time has past since last flash. Please execute flashing, or HV OFF.	This message will be shown when 24 hr have passed, or 8 hr of accumulative HV on time have passed since last flashing operation. Execute flashing within 30 min. If you do not flash within 30 min., HV will be shut off automatically.
7101	HV turned off due to excessive time since last flash. Please execute flash	This message will be shown when HV is shut off automatically. Execute flashing and then turn HV on.
7102	Long time has passed since last flash. Please execute flash.	This message will be shown when 24 hr have passed, or 8 hr of accumulative HV on time have passed since last flashing operation. Execute flashing and then turn HV on.
7200	Abnormal temperature rise occurred in the power supply. Shut down the PC and turn the [DISPLAY] switch off. Restart the microscope after about half	This message will be shown when temperature of high power electric circuitry exceeds specified value. Turn the EO control switch off. Wait for about 30 min. Then turn the switch on and start operation. If the message is shown frequently, contact a service engineer.

Error Code	Message	Cause & Remedy
	an hour. When this message is shown again, contact service engineer.	
7201	Detection of an error in the cooling function for the objective lens. If the column temperature around the objective lens is about 40 , shut down the PC and turn the [DISPLAY] switch off. Wait for more than 5 hours. When the temperature of objective lens returns the room temperature, turn the [DISPLAY] switch on, and check the cooling water flow and water temperature. Water flow:1 to 1.5 L/min Water temperature: 10 to 20°	This message will be shown when temperature of the objective lens coil exceeds specified value or cooling water flow value is not enough. If the message is shown frequently, contact a service engineer.
7202	Temperature has recovered.	This message will be shown when the message code 7200 or 7201 has appeared and the temperature has recovered to normal value. You may continue operation. If message code 7200 or 7201 is shown frequently, contact a service engineer.
7203	Specified Height mode not allowed.	This message will be shown when specifying the Sample Height that exceeds allowed value at the present accelerating voltage. Use allowed Sample Height mode.
7204	Specified Accelerating voltage not allowed.	This message will be shown when specifying the accelerating voltage that exceeds allowed value at the present Sample Height. Use allowed accelerating voltage.
7777	Host and SEM Controller are not communicating. Confirm that power is on.	The S-5200 system uses a microprocessor for controlling the hardware. The microprocessor is linked with PC using Ethernet. The message [Host and SEM Controller are not communicating. Confirm that power is on] shows that there has been some failure on the initial connection of this Ethernet. If this message appears, click OK button on this message dialog and turn EO CONTROL switch off. Then, turn this switch on again and start S-5200 program. If the error message appears again and your SEM is using a motorized stage, check if the power switch of the stage controller is turned on.

11.5 Setting the PC Environment

Creating the File

The S-5200 program file and the directory structure for files to be used and created are shown below.

Program Files

The following files exist in the directory c:\Program Files\PC_SEM\. This directory holds programs that pertain to PC operations.

- PC_SEM.exe
- PC_SEM.hlp
- PC_SEM.cnt
- Ras.exe
- SetlpAdr.exe

The following principal files exist in the directory c:\Winnt\systems32\, which holds shared programs on the PC.

- Semlmg32.dll
- ToyLib.dll
- PciLib.dll
- Other dll, ocx files

The following file exists in the directory c:\Winnt\Systems32\drivers:

- WinRt.sys

The following files exist in the directory c:\Vrtsys. This directory holds VRT control programs. When the system is started, the files indicated by ∗ are downloaded onto the VRT.

- vxWorks∗
- vxWorks.sym∗
- vxWorks.mapA∗
- vxWorks.mapL∗
- Ftpserv.exe
- Ctr.bmp

NOT: If the software is restored or the PC is changed due to the PC malfunction, reset or reinstall the program according the procedure shown below.

S-5200 Restore CD Creation

No.	Item	Procedure	Check	Notes
1	Check BIOS Verify that secondary drive 0 is set to PIO Mode-4.	1. After the PC is turned on, press [F10] when <F10=Setup> is displayed at the right bottom of the screen. 2. When the language menu appears, select Japanese and press Enter. 3. Select storage/IDE drive timing from the menu. 4. Verify that secondary drive 0 is set to PIO Mode-4. If secondary drive 0 is not set to PIO Mode-4, follow the procedure shown below to correct the setting. 1. Select secondary drive 0 by using the down arrow key to move the cursor. 2. Change the setting from Enhanced DMA (example) to PIO Mode-4 by using the left arrow key. 3. Press [F10]. 4. Select File/Save and Close, and then press [Enter]. 5. Press [F10] when instructed.		
2	Check SCSI	• SCSI Adaptec 2940 (Hardware) must be installed in the PC. • SCSI Adaptec 2940 (software) driver must be installed in the PC.		
3	Create a restore CD. (Preparation)	1. Turn off the Display. 2. Connect a CD-R drive. 3. Turn on the CD-R drive. 4. Insert a CD-R blank media (x12 capable) into the CD-R drive. 5. Insert Drive Image 4.0 setup disk 1 of 3 into the floppy disk drive. (The English version will be 1 of 2.) 6. Turn on the PC. (Turn on the Display also.) 7. Insert disk 2 of 3 when prompted and press Enter. (The English version will be 2 of 2.) 8. Insert disk 3 of 3 when prompted and press Enter. (No English equivalent.) 9. When the Drive Image 4.0 menu appears, press Num Lock.		

No.	Item	Procedure	Check	Notes
4	Create a restore CD	1. Click “Create image” using the mouse. 2. Select C drive from “Create image/ Select original partition.” 3. Press the Reference button in the “Create image” window. 4. Select the CD-RW drive for the new image file. (//./pqcdl GENERIC CDR-BP2 2.21 11x31) 5. Type S52-#### (ex: S-52-0105 #### shows a Production No.) and press OK. 6. Select Standard (Low) or High (High) level for Compression (depending on the expected capacity.) 7. Select the Error detection, disk save and Image file check options, and press Complete. 8. When requested, insert Drive Image 4.0 setup disk 1 of 3 into the floppy disk drive and press OK. (The English version will be 1 of 2.) 9. When requested, insert Drive Image 4.0 setup disk 2 of 3 into the floppy disk drive and press OK to create the restore CD. (The English version will be 2 of 2.) 10. After the restore CD check is completed, a completion message will appear. Remove the CD when requested. (If an error occurs, contact the person in charge.)		
5	Check the restore CD	1. Insert the restore CD into the CD-ROM drive and restart the PC by pressing Alt+Ctrl+Del. 2. When the Drive Image 4.0 menu appears, press Restore. 3. Press the Reference button for an image file selection, and select CD-ROM drive as the drive selection. 4. When S52-####.PQI appears under File, click to select and press OK. 5. Select “C:” for disk 1 for the selection of the targeted partition or empty range, and press Next. 6. The confirmation message shown below appears. “The selected drive is not empty. The disk image can be restored only in the current location. Before the image is restored, the partition is removed. Warning: The deletion of the partition deletes all data from the partition.” 7. Select High Speed for the Disk Write mode. 8. When the message, “ready to restore” appears, press Complete. (The process of restoring appears on the screen to show the progress.)		

No.	Item	Procedure	Check	Notes
		9. When the message, “The image has been restored. Do you want to see the results?” appears, select Yes to confirm the results. 10. When a message asking to restart the computer appears, remove the CD-R and press Restart. 11. Confirm that the SEM starts properly.		

11.6 S-5200 PC (DESKPRO EP/P450+/6b/4/64c) Setup Procedures

11.6.1 Required Items

- PC (DESKPRO EP/P500+/6b/4/64c)
- Network board (Intel PRO/100+ COMPAQ)
- Transfer board
- Restore CD (DESKPRO ED Series Ver.4.1)
- Windows NT 4.0 CD-ROM
- Windows NT Service Pack 4 CD-ROM
- Intel PRO/100+ CD-ROM (Network board device driver)
- S-5200 software (CD-ROM)
- SCSI board (Refer to the manual that comes with SCSI for SCSI driver installation procedure.)

11.6.2 Hardware Setup

1. Make sure that the power for the PC is off; remove the cover.
2. Switch the CD and FD drives, placing them sideways.
3. Insert the expansion memory.
4. Install the Network, Video, and Imposer boards in the following slots:

PCI:	Empty
PCI:	SCSI board
PCI:	Network board
PCI:	Transfer board
PCI/ISA:	Empty
ISA:	Empty

11.6.3 BIOS Settings

1. Turn ON the power for the PC.
2. When [F1: Save Change] appears, press the [F1] key. (The system restarts.)
3. When [F10 = Setup] appears, press the [F10] key.
4. When prompted to select a language, specify [English], and press the [Enter] key.
5. Select [Power] → [Power Saver]. Press the [Enter] key.
6. Set the [Power Saver Mode] to [Disable]. Press the [F10] key.
7. Select [Custom] → [Power-on option]. Press the [Enter] key.
8. Set [State at Power-off] to [On]. Press the [F10] key.
9. Select [File] → [Save Changes and Exit]. Press the [Enter] key.

10. When [Are you sure you want to save changes and exit?] appears, insert the Restore CD into the CD-ROM drive. Press the [F10] key. (The system restarts.)

11.6.4 Setting up the Operating System

1. When [Select Language] appears, select [English], and press the [Enter] key.
2. When the [Compaq Restore CD] window appears, click on [Begin].
3. When [Please select the operating system and language ...] appears, confirm [Windows NT 4.0] and [English]. Click on [Next].
4. When [You have chosen to Restore the operating system ...] appears, click on [Next].
5. When [Please select the hard drive partitioning ...] appears, click on the [Arrow] button to effect the following changes, and then click on [Next]:

C	2045MB	FAT16	Boot partition
D	2045MB	FAT16	
E	2045MB	FAT16	
F	14MB	FAT16	

6. When [The contents of your hard disk are about to be destroyed....] appears, click on [Next].
7. When [WARNING] appears, click on [Yes].
8. When [For the Restore process to continue ...] appears, click on [Reboot] (the system restarts).
9. When [Select the applications you would like to restore to your system ...] appears, click on [Next].
10. When [You have chosen to Restore the software ...] appears, click on [Next].
11. When [Please remove the Compaq Restore CD ...] appears, replace the Restore CD-ROM in the CD-ROM drive with the Windows NTCD-ROM. Click on [Next].
12. When [The operating system you have selected requires Service Pack ...] appears, replace the Windows NT CD-ROM in the CD-ROM drive with the service pack CD-ROM. Click on [Next].
13. When [The Compaq Restore CD has formatted and prepared the hard disk ...] appears, click on [Begin Setup].
14. When [Please remove the CD from your CD-ROM drive ...] appears, take out the service pack CD-ROM from the drive. Click on [OK] (the system restarts).
15. When [Please read the following license agreement ...] is displayed, click on [I Agree].
16. When [Name and Organization] appears, type in [S-5200] and [HITACHI]. Click on [Next].
17. When [Registration] appears, type in your license number. Click on [Next].
18. When [Windows NT Setup] appears, click on [Next].
19. When [Date and Time properties] appears, set the region as [Tokyo...], and click on [Close] (the restoring process begins).
20. When [The Compaq Restore CD process is complete...] appears, press the [Enter] key. (The system restarts.)
21. When the [Begin Logon] screen appears, press the [Ctrl+Alt+Del] keys.
22. Log on by entering the user name [Administrator], the password [none], and clicking on [OK]. (Internet Explorer is installed.)

11.6.5 Screen Settings

1. When [Begin Logon] appears, press the [Ctrl+Alt+Del] keys.
2. Log on by entering the user name [Administrator], the password [none], and clicking on [OK].
3. When [Internet Explorer] appears, uncheck [Show this next time you log in], and click on [Close].

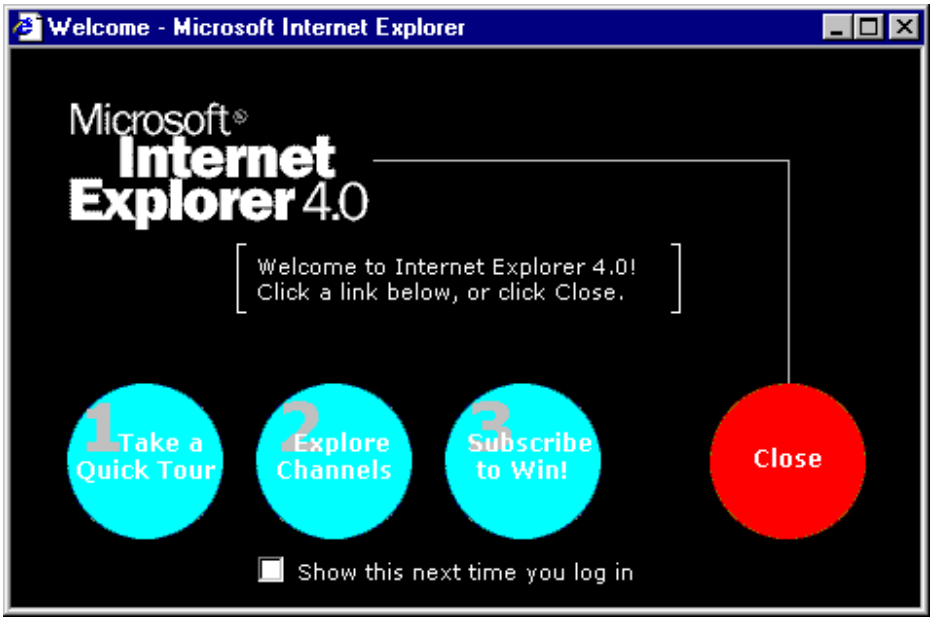

4. Move the mouse cursor to the background. Right click the mouse. Select [Properties] from the menu.
5. On [Display Properties], select the [Background] tag, and set [Pattern][Wallpaper] to [(None)].

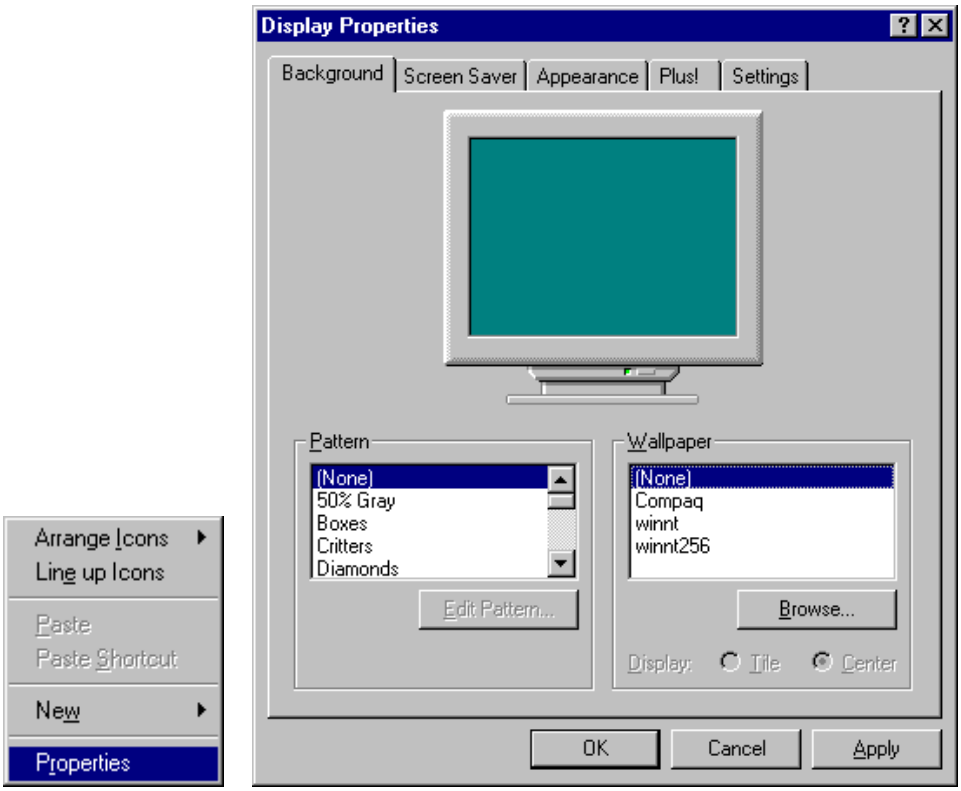

6. On [Display Properties], set [Settings] to [16777216 Colors][Small Font][1024 × 768][75 Hertz]. Click on [OK].

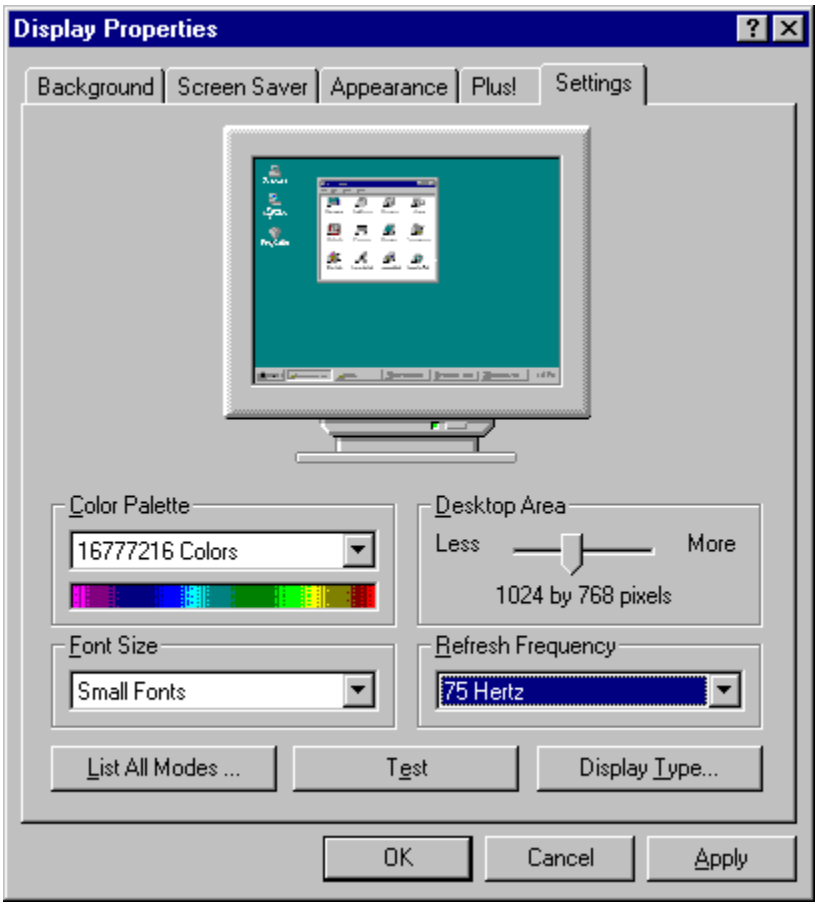

7. When [You have not tried these new settings successfully ...] appears, click on [OK].

11.6.6 Installing the Network Driver

1. Select [Start] → [Settings] → [Control Panel] to open [Control Panel].

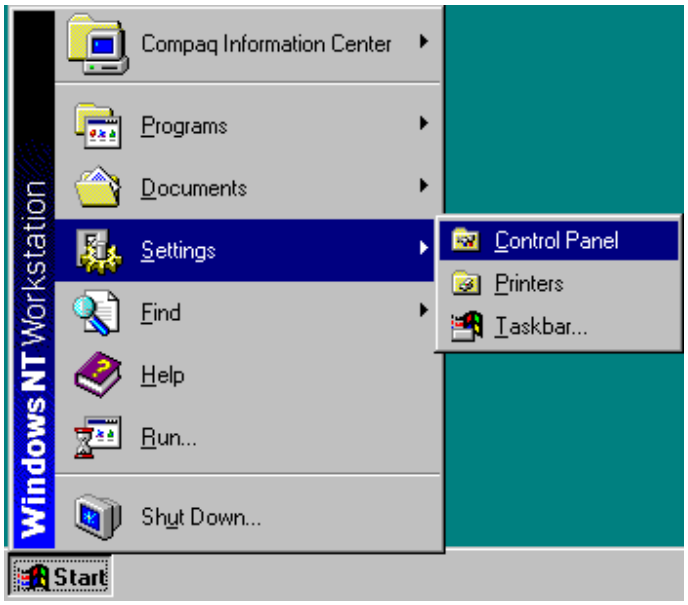

2. On [Control Panel], double click on the [Network] icon.
3. On the [Network] window, select the [Identification] tab. Click on [Change].

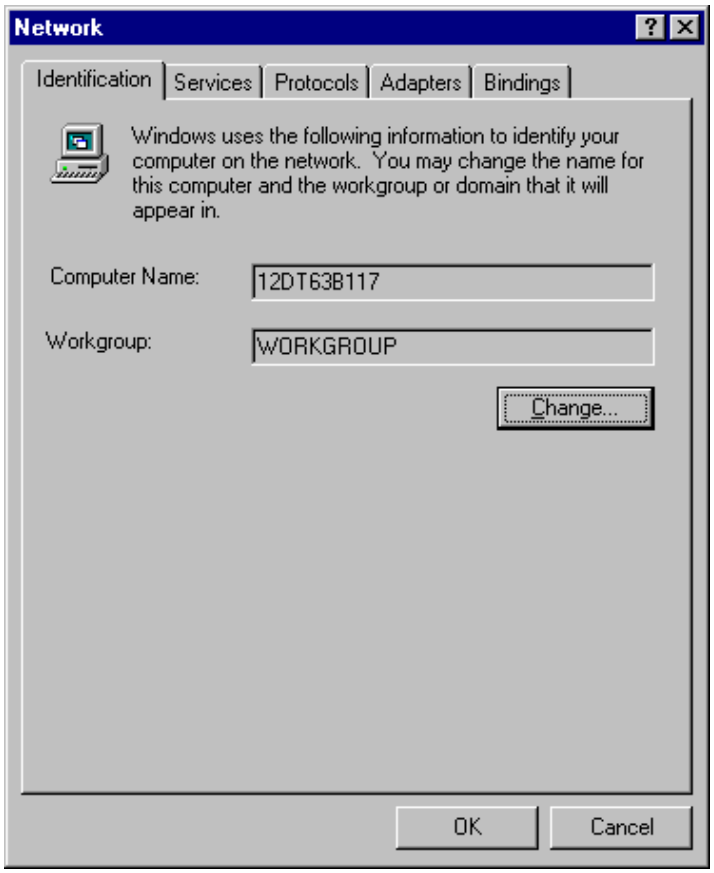

4. Change [Computer Name] to [S-5200]. Click on [OK].

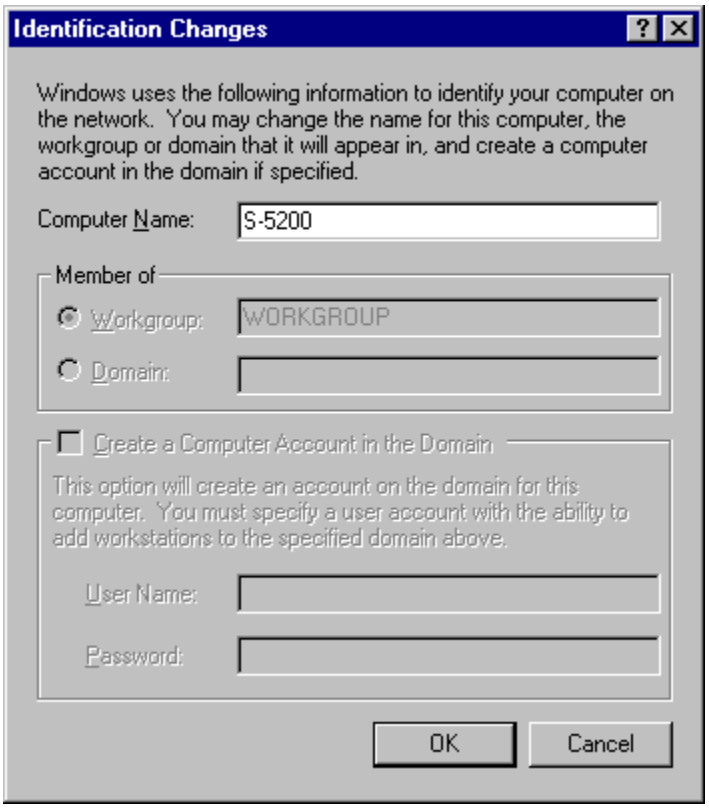

5. When [Network Configuration] appears, click on [OK].

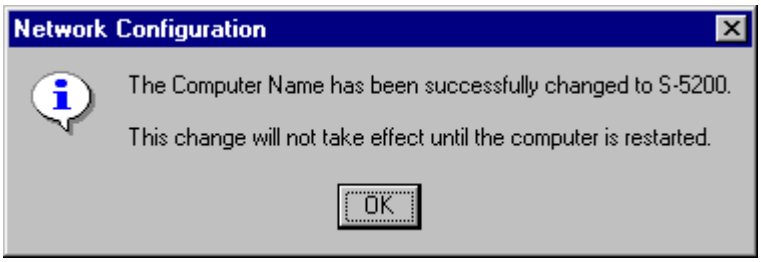

6. On the [Network] window, select the [Identification] tab, and click on [Change].
7. Change [Workgroup] to [PCSEM]. Click on [OK].

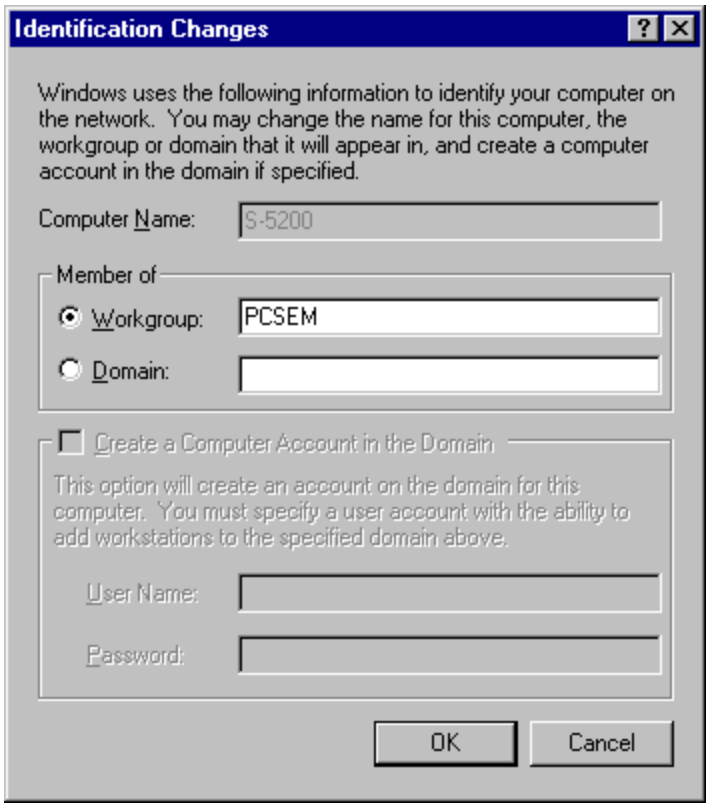

8. When [Network Configuration] appears, click on [OK].

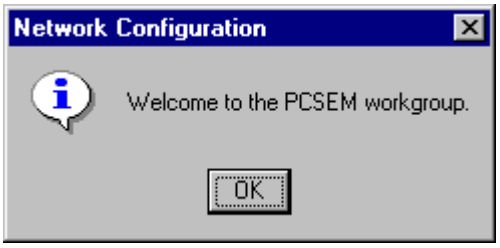

9. On the [Network] window, select the [Protocols], and click on [Add].

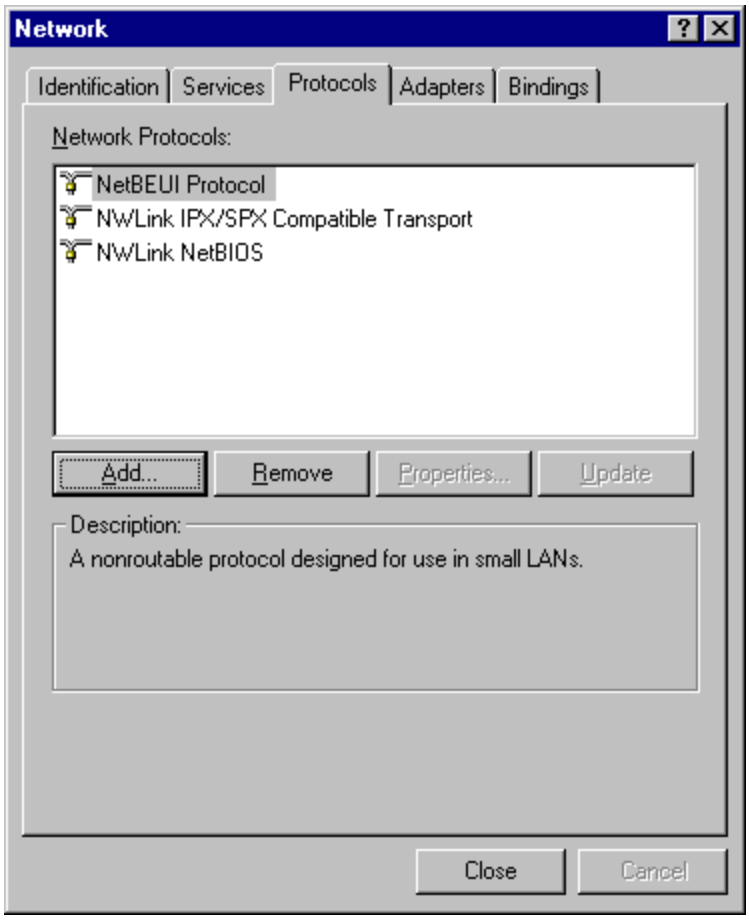

10. When the [Select Network Protocols] window appears, select [TCP/IP protocol]. Click on [OK].

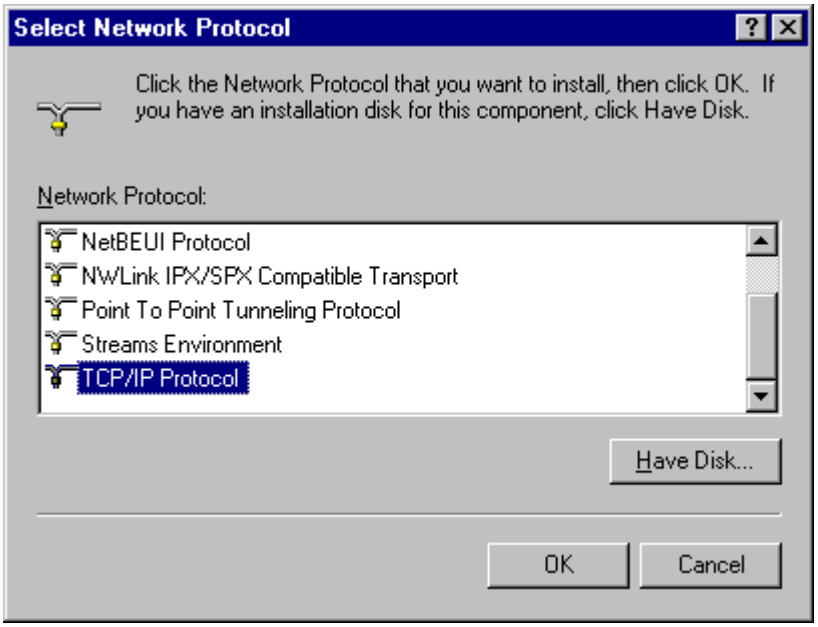

11. When [If there is a DHCP server on your network ...] appears, click on [No].

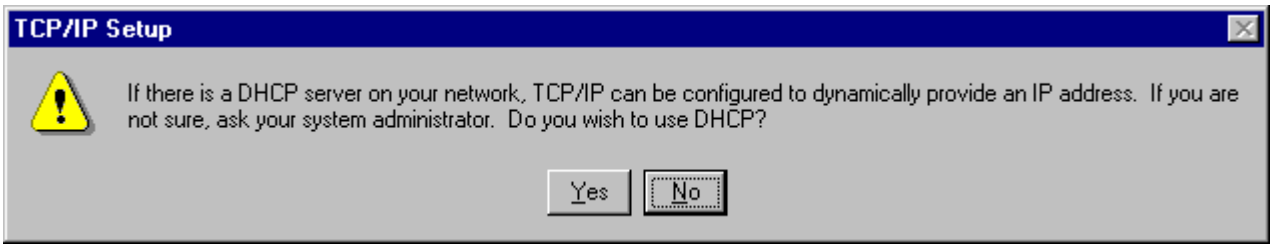

12. When the [Windows NT Setup] window appears, type in [C:\i386], and click on [Continue].

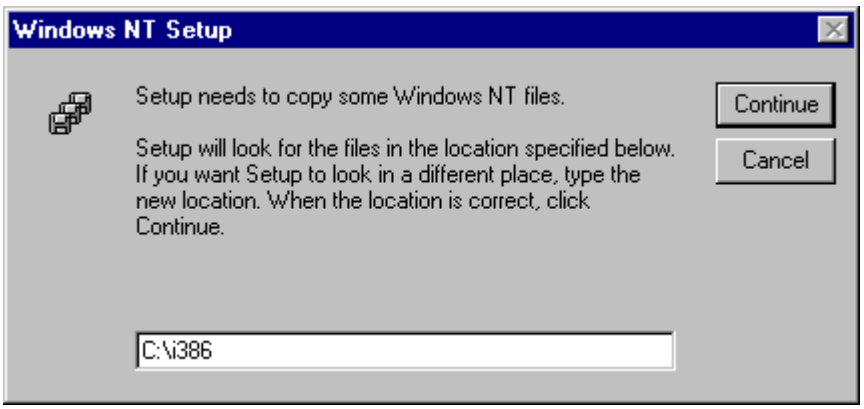

13. On the [Network] window, click on [Close].
14. When [Microsoft TCP/IP Properties] appears, enter the following information, and then click on [OK]:

    [IP Address]: [172.18.49.223]
    [Subnet Mask]: [255.255.255.0]
    (The other settings remain unchanged.)

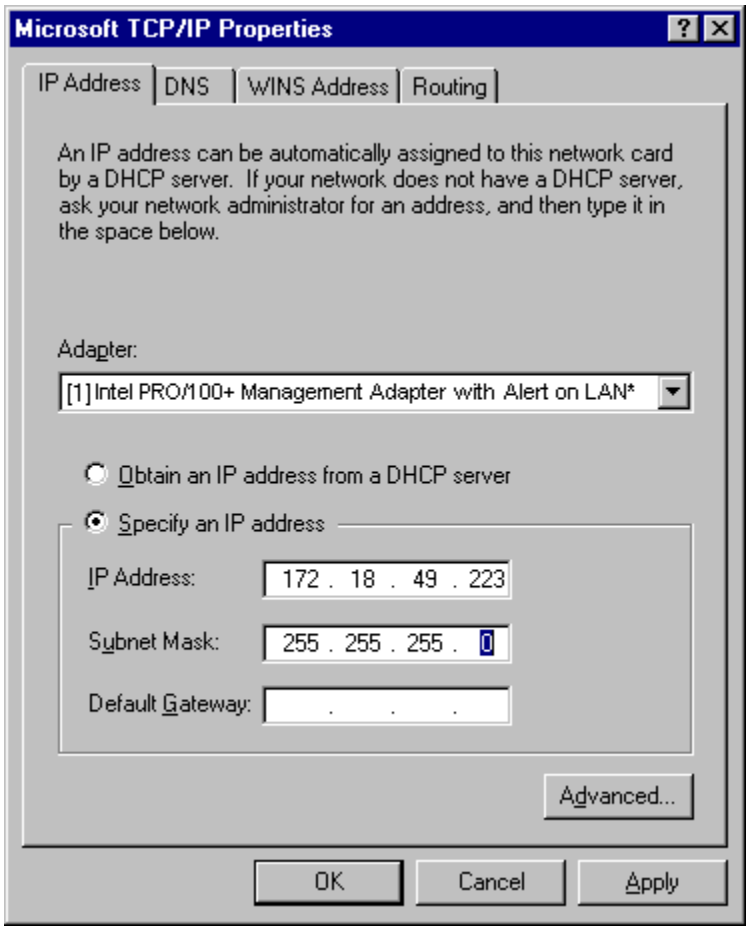

15. When [You must shut down and restart your computer ...] appears, click on [Yes] (the system restarts).

11.6.7 Installing the Service Pack

1. When [Begin Logon] appears, press the [Ctrl+Alt+Del] keys.
2. Enter the user name [Administrator] the password [none], and click on [OK].
3. On [Desktop], double click on the [Service Pack4] icon.

4. On [Service Pack4], double click on the [Update] icon.

5. When [Welcome to Windows NT 4.0 Service Pack 4 Setup ...] appears, checkmark [Accept the license Agreement], uncheck [Backup files necessary to uninstall ...], and click on [Install]. (The installation process begins.)

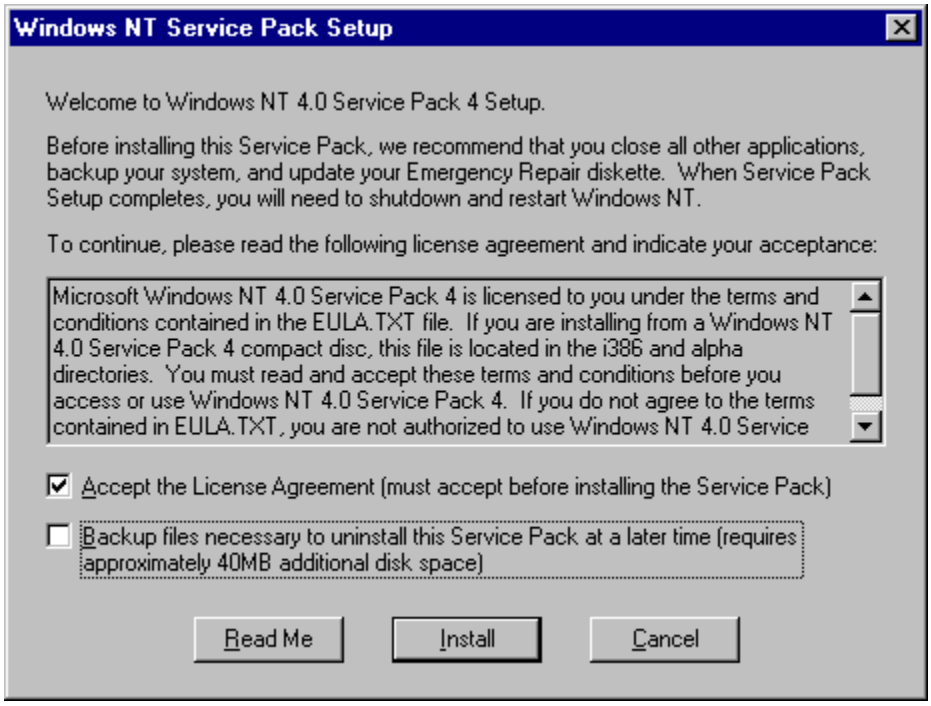

6. When [Windows NT 4.0 Service Pack 4 installation is complete ...] appears, click on [Restart] (the system restarts).
7. When [Begin Logon] appears, press the [Ctrl+Alt+Del] keys.

8. Enter the user name [Administrator], the password [none], and click on [OK].
9. When [No known Year 2000 issues detected on this system] appears, click on [OK].

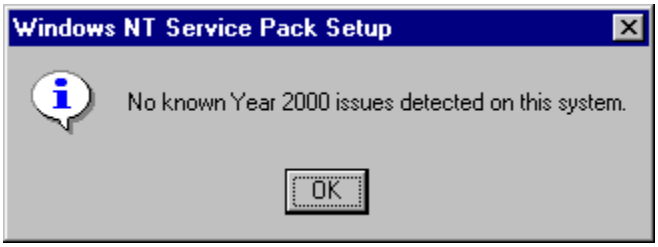

10. On the [Service Pack4] window, click on [X] to close the window.

11.6.8 Adding a User

1. Select [Start] → [Programs] → [Administrative Tools (Common)] → [User Manager]. Open [User Manager].

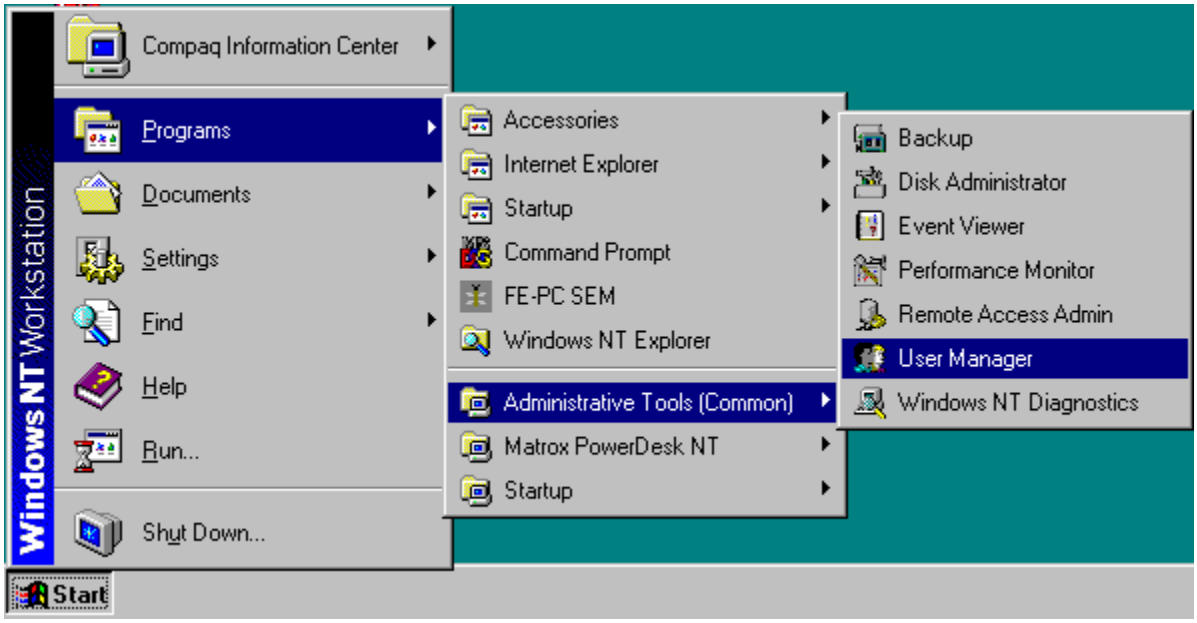

2. Select [User] → [New User]. Open [New User]. Enter the following settings:

   [Username]: [SEM]
   [Full Name]: [SEM service]
   [Description]: [SEM service]
   [Password]: [PCsem]

[Confirm Password]: [PCsem]
[ ]: [User Must Change Password at Next Logon]
[√]: [User Cannot Change Password]
[√]: [Password Never Expires]
[ ]: [Account Disabled]

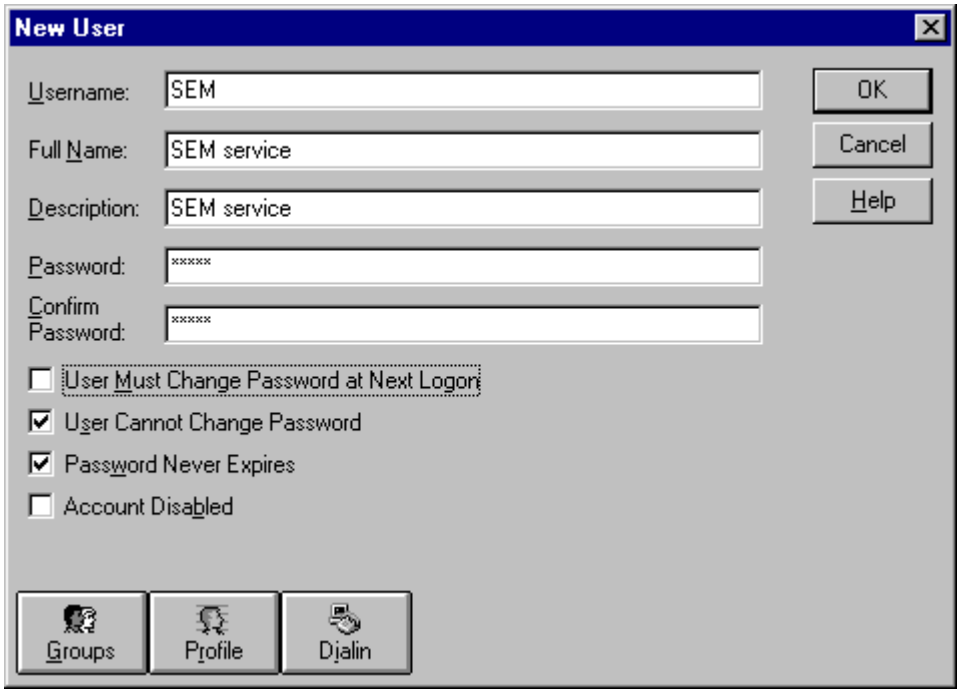

3. Click on the [Group] icon to open [Group Memberships].
4. On [Not member of], select [Administrators], click on [←Add], and then click on [OK].

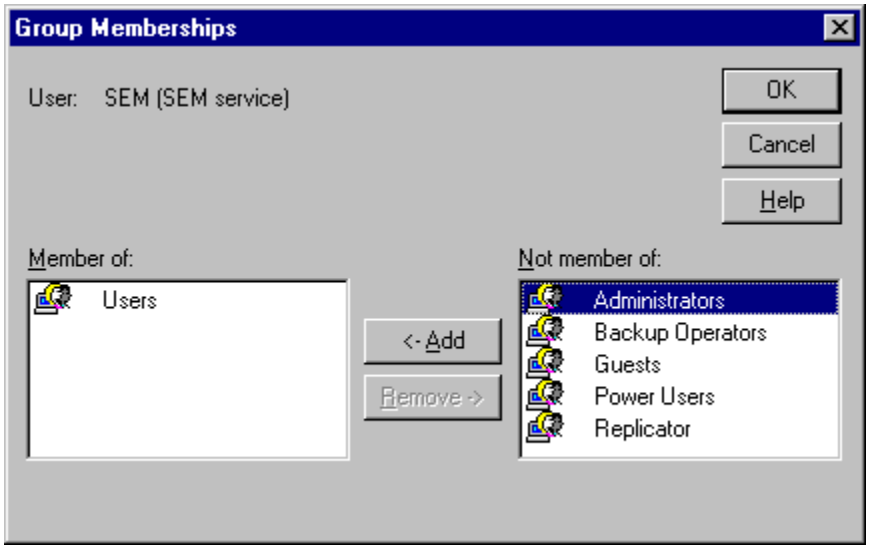

5. On [New User], click on [OK].
6. Select [User] → [New User]. Open the [New User] window, and effect the following settings:

   [Username]: [S-5200]

[Full Name]: [SEM user]
[Description]: [SEM user]
[Password]: [(none)]
[Confirm Password]: [(none)]
[ ]: [User Must Change Password at Next Logon]
[ ]: [User Cannot Change Password]
[√]: [Password Never Expires]
[ ]: [Account Disabled]

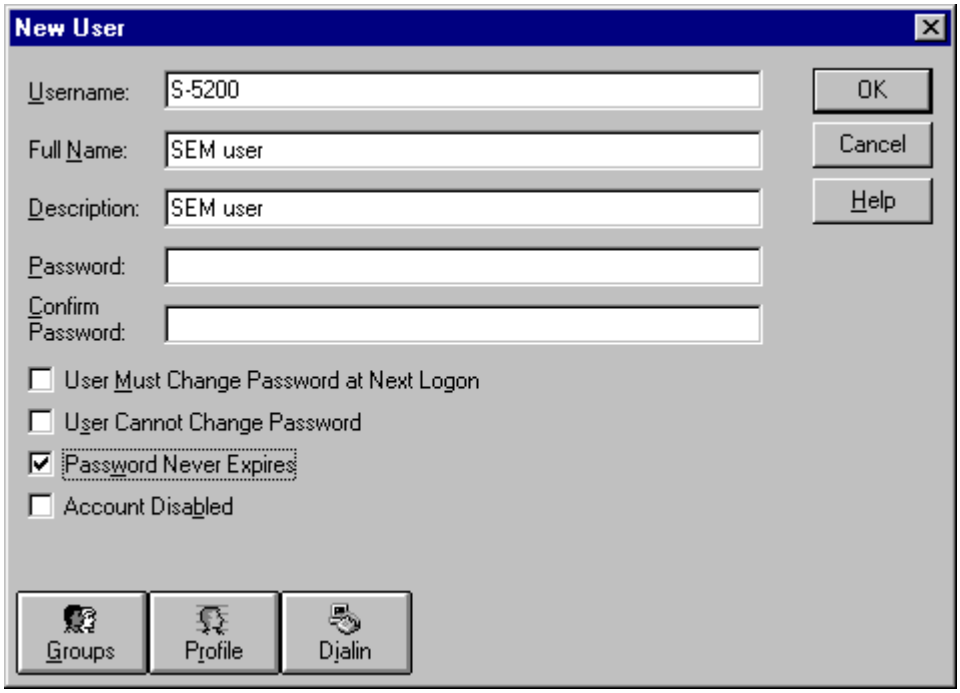

7. On [New User], click on [OK].
8. On the [User Manager] window, click on [X].

11.6.9 Setting the User Environment

1. Click on the [Speaker] icon. Place a checkmark on [Mute].

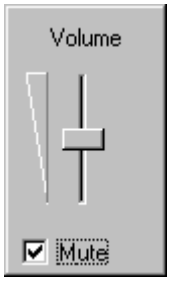

2. Select [Start] → [Settings] → [Taskbar], and open the [Taskbar Properties] window.

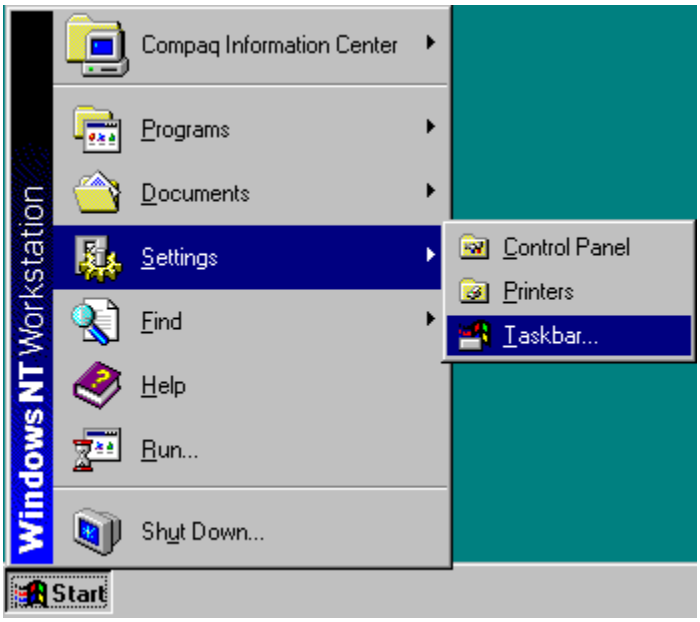

3. Select the [Taskbar Options] tab. Set the checkboxes as shown below, and click on [OK]:

   [√]: [Always on top]
   [√]: [Auto hide]
   [ ]: [Show small icons in Start menu]
   [√]: [Show Clock]

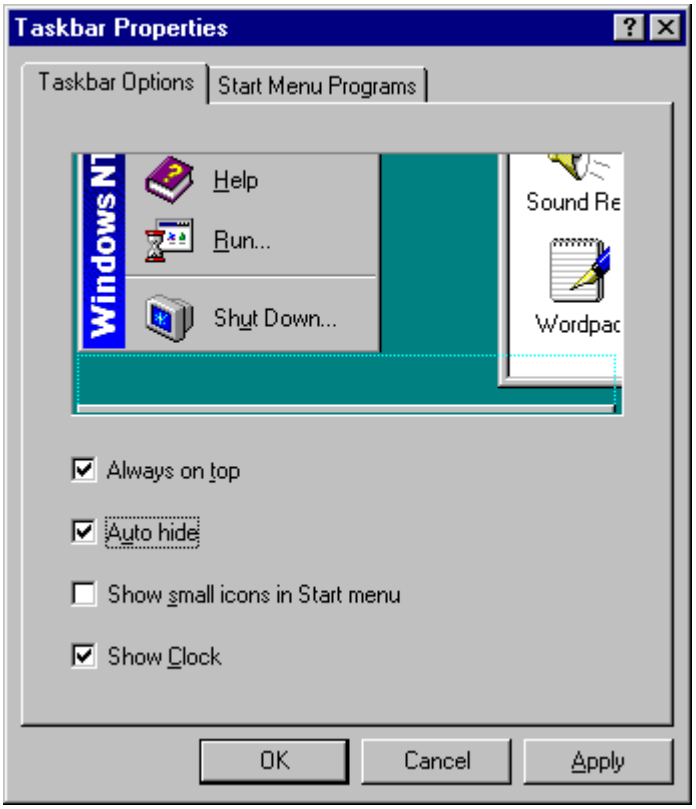

4. On [Control Panel], double click on the [System] icon.

5. On [System Properties], select the [Performance] tab. On [Virtual Memory], click on [Change].

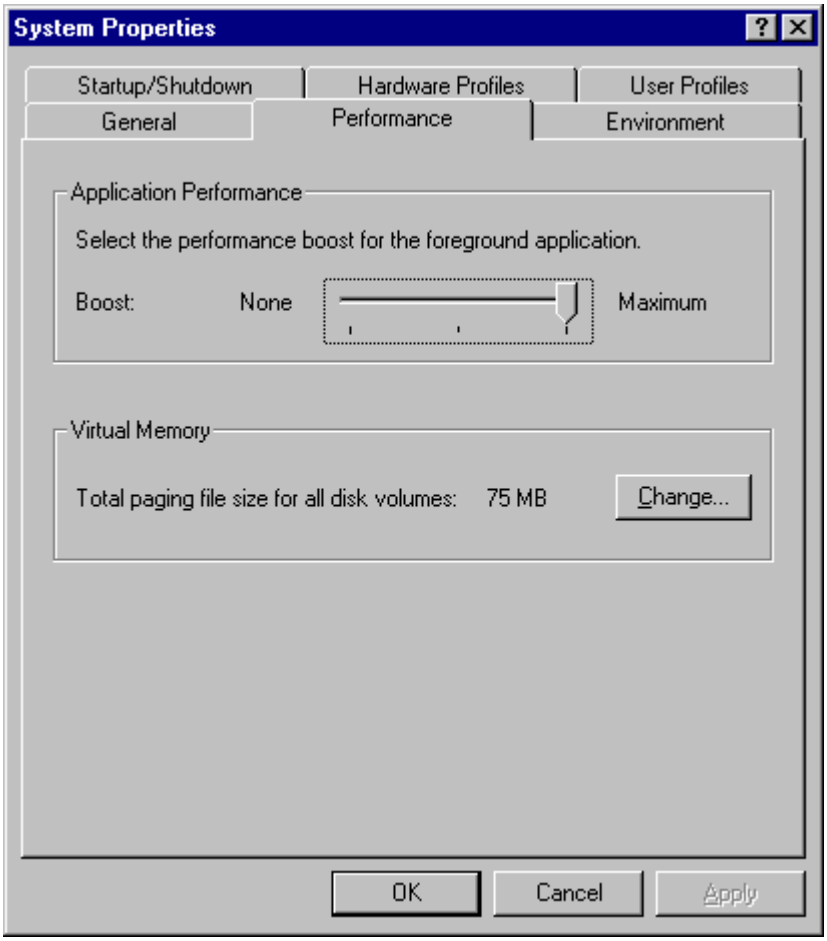

6. On [Virtual Memory], set both [Initial Size][Maximum Size] to [200MB]. Click on [Set].

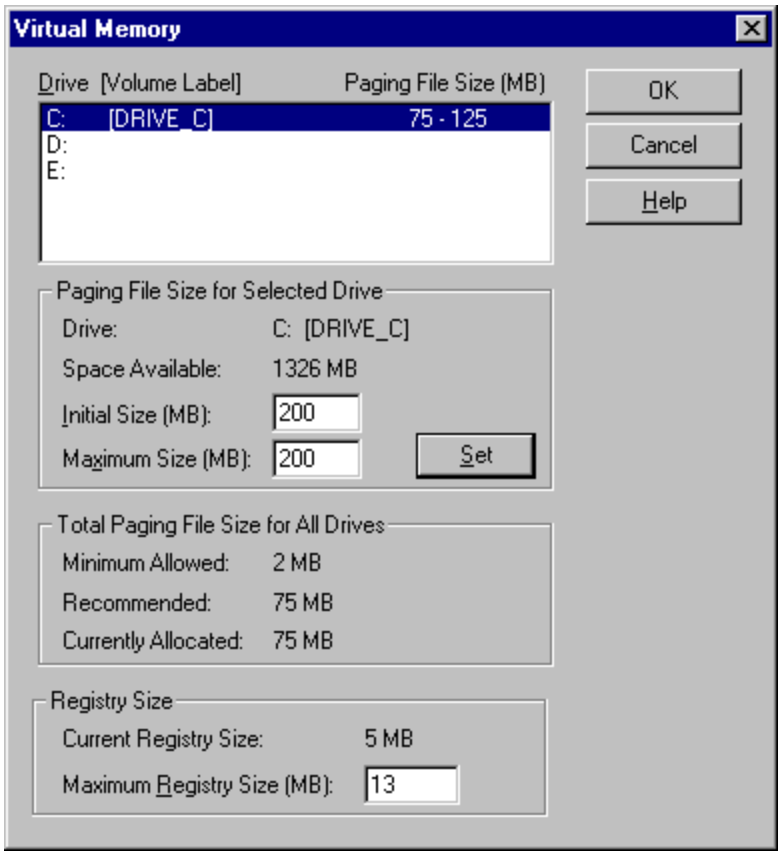

7. On [Virtual Memory], click on [OK].
8. On [System Properties], select the [Startup/Shutdown] tab. Set [Show list for] for the boot system to [0 seconds].

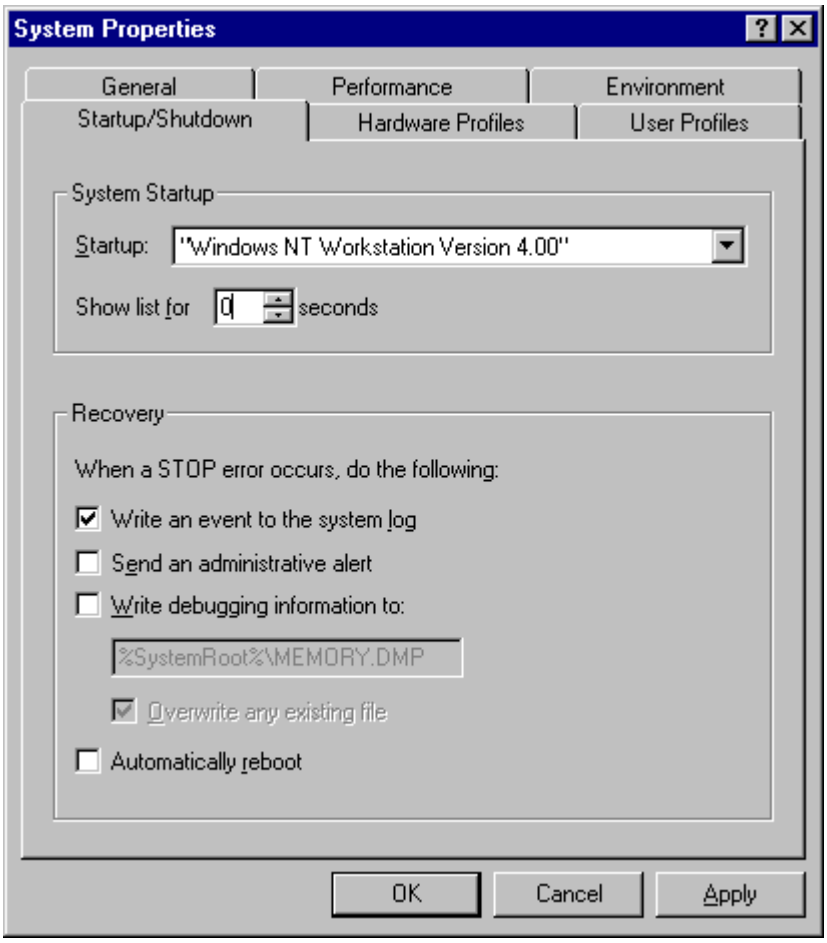

9. On [System Properties], click on [OK].
10. When [You must restart your computer ...] appears, click on [Yes]. (The system restarts.)

11. When [Begin Logon] appears, press the [Ctrl+Alt+Del] keys.
12. Enter the user name [SEM] and the password [PCsem]. Click on [OK].
13. When [Internet Explorer] appears, click on [X].

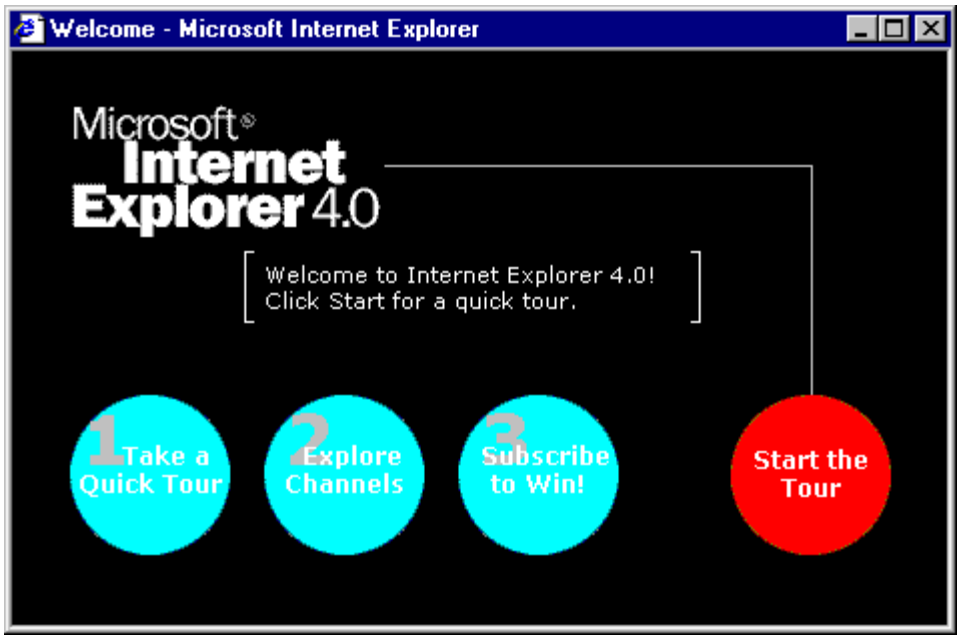

14. Select [Start] → [Setting] → [Taskbar] to open the [Taskbar Properties] window.

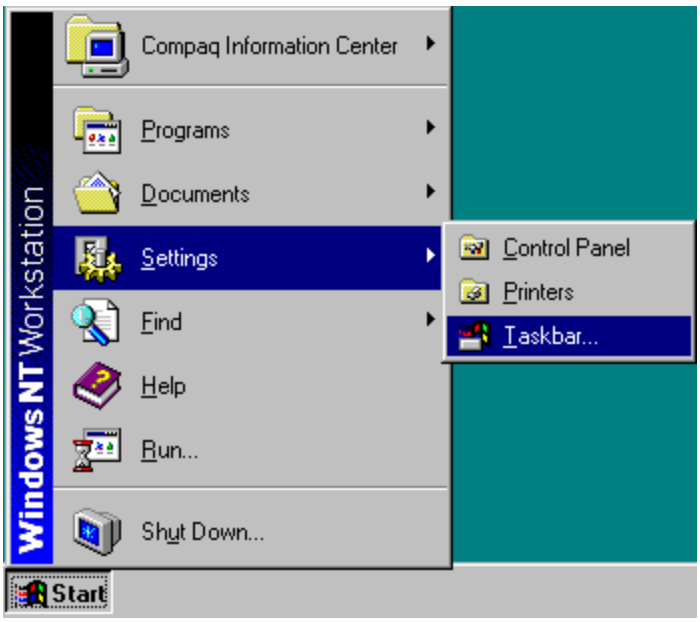

15. Select the [Taskbar Options] tab. Set the checkboxes as follows, and click on [OK]:

[√]: [Always on top]
[√]: [Auto hide]
[ ]: [Show small icons in Start menu]
[√]: [Show Clock]

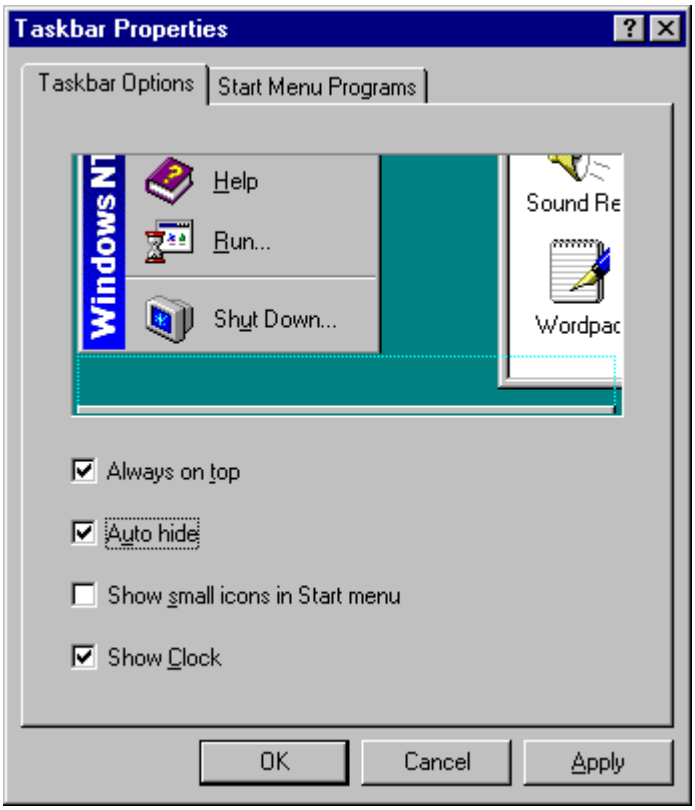

16. Move the mouse cursor to the background. Right click the mouse. Select [Properties] from the menu.
17. On [Display Properties], select the [Background] tab, and set [Pattern][Wallpaper] to [(None)].

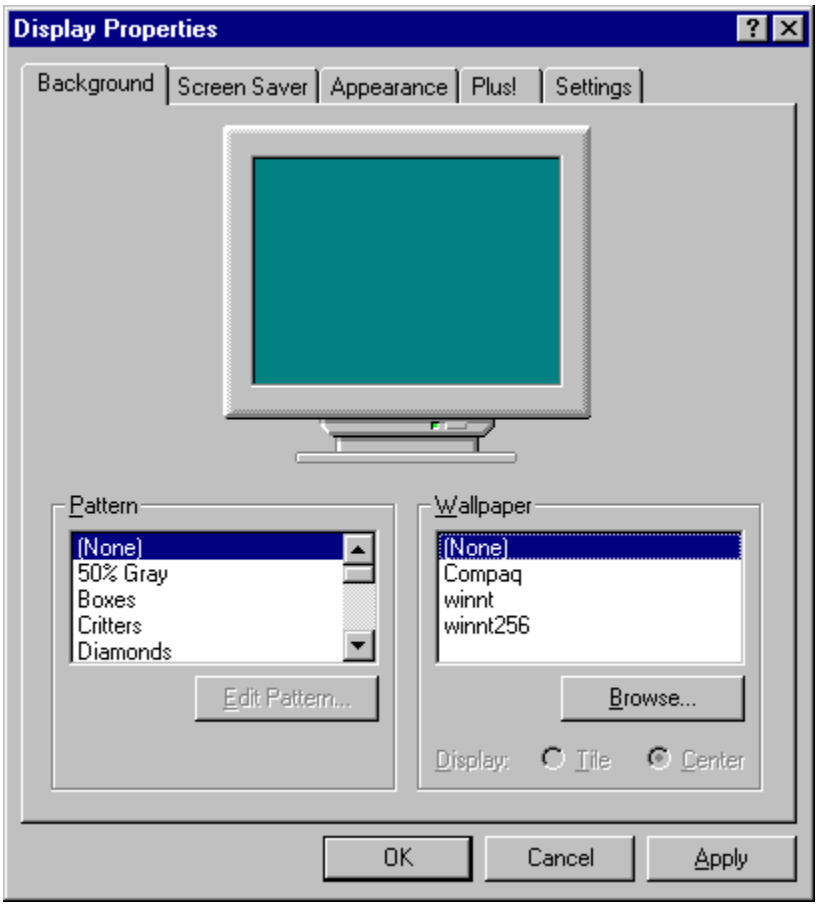

18. Select [Start] → [Shut Down]. Select [Close all programs and log on as a different user?], and click on [Yes].

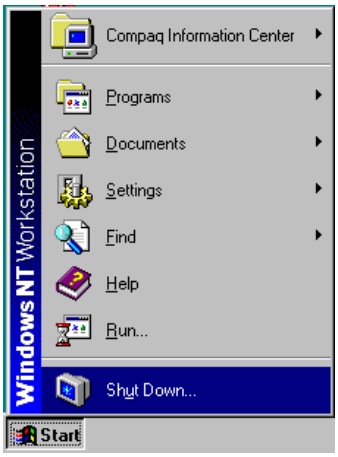

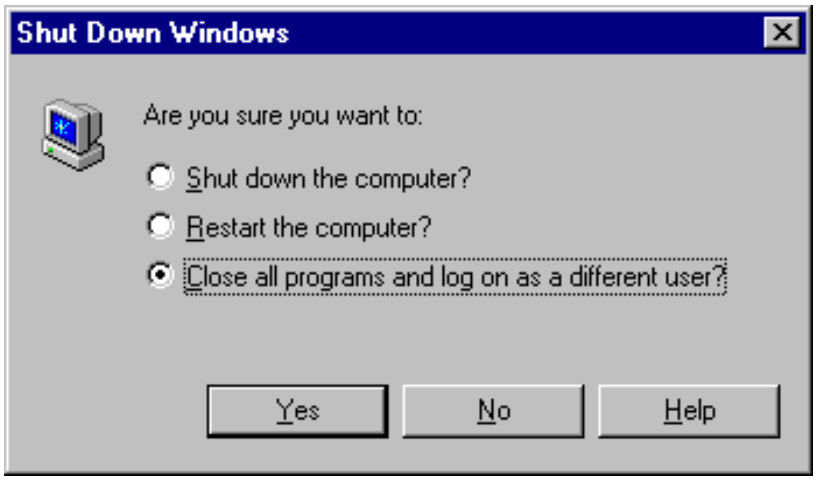

19. When [Begin Logon] appears, press the [Ctrl+Alt+Del] keys.
20. Enter the user name [S-5200], the password [(none)], and click on [OK].
21. When [Internet Explorer] appears, click on [X].

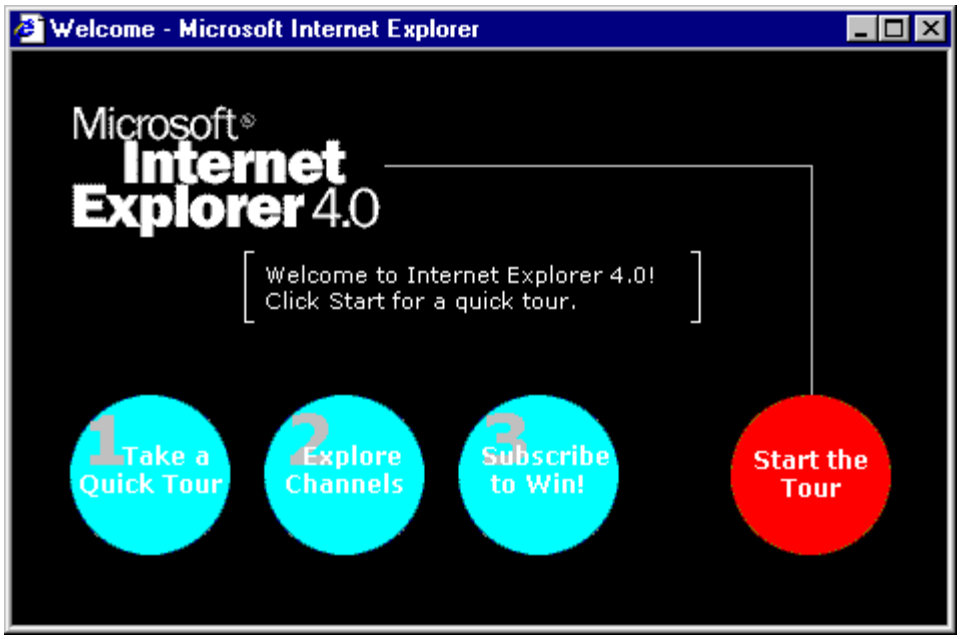

22. Select [Start] → [Settings] → [Taskbar] to open [Taskbar Properties].

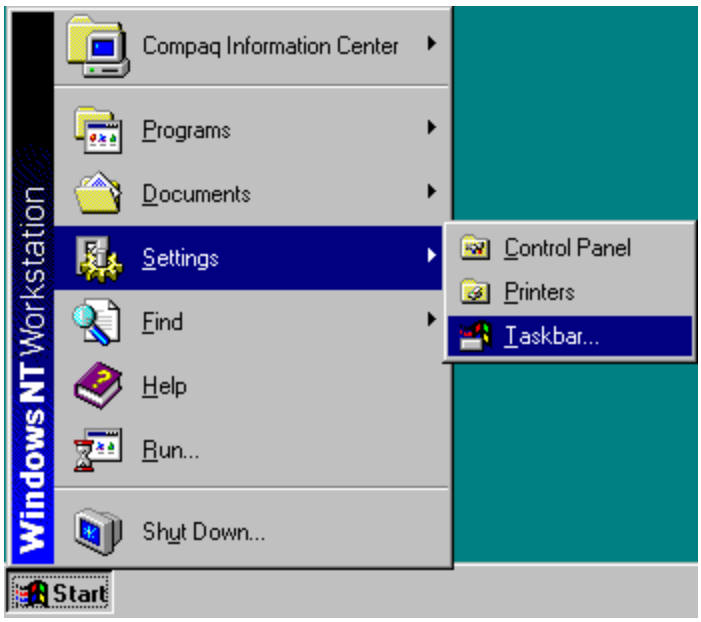

23. Select the [Taskbar Options] tab. Set the checkboxes as follows, and click on [OK]:

    [√]: [Always on top]
    [√]: [Auto hide]
    [ ]: [Show small icons in Start menu]
    [√]: [Show Clock]

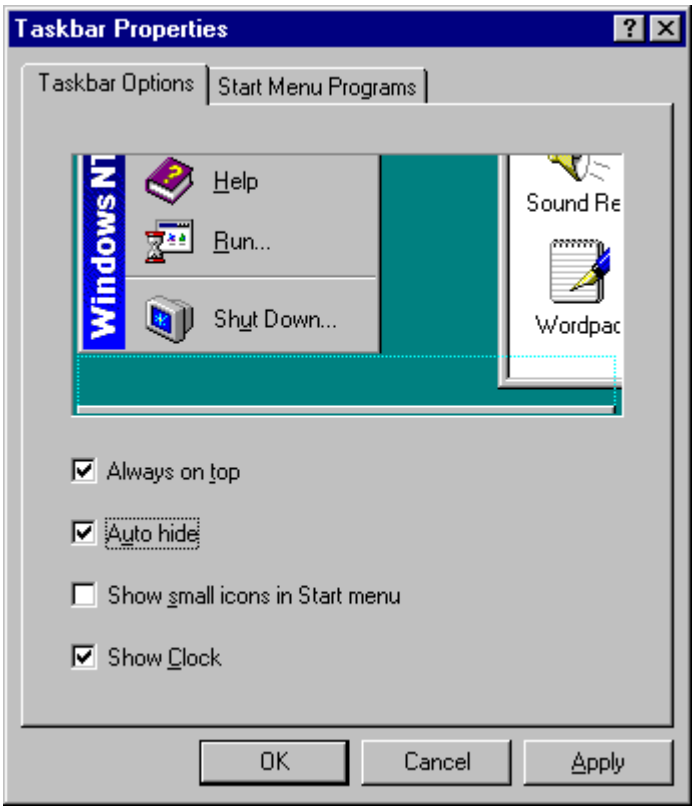

24. Move the mouse cursor to the background. Right click the mouse. Select [Properties] from the menu.
25. On [Display Properties], select the [Background] tab, and set [Pattern][Wallpaper] to [(None)].

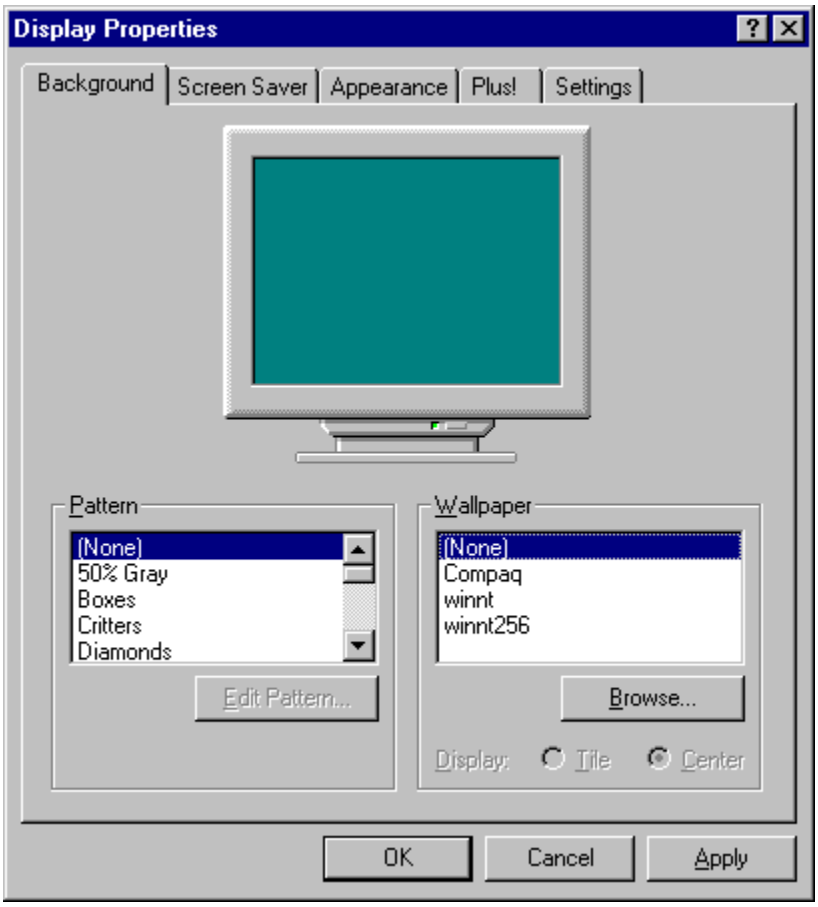

26. Select [Start] → [Shut Down]. Select [Close all programs and log on as a different user?], and click on [Yes].

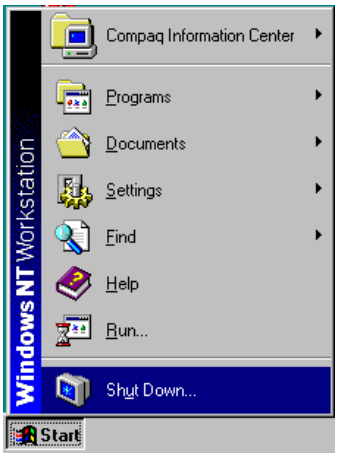

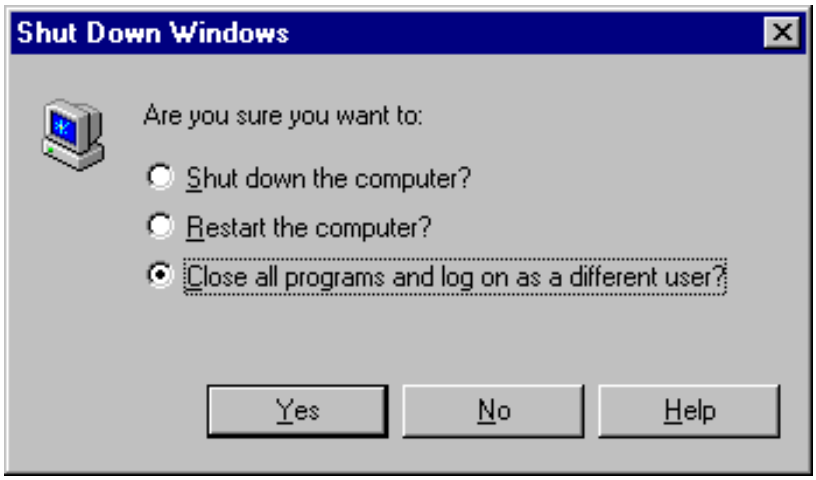

11.6.10 Setting the Hyper Terminal

1. When [Begin Logon] appears, press the [Ctrl+Alt+Del] keys.
2. Type the user name [Administrator], the password [none], and click on [OK].
3. Click on [X] on the [Control Panel] window.

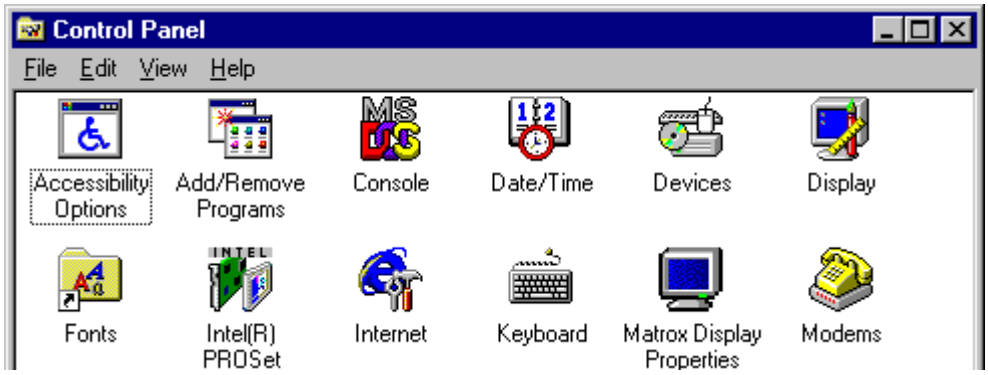

4. Open [Start] → [Programs] → [Accessories] → [Hyper terminal] → [Hyper terminal].

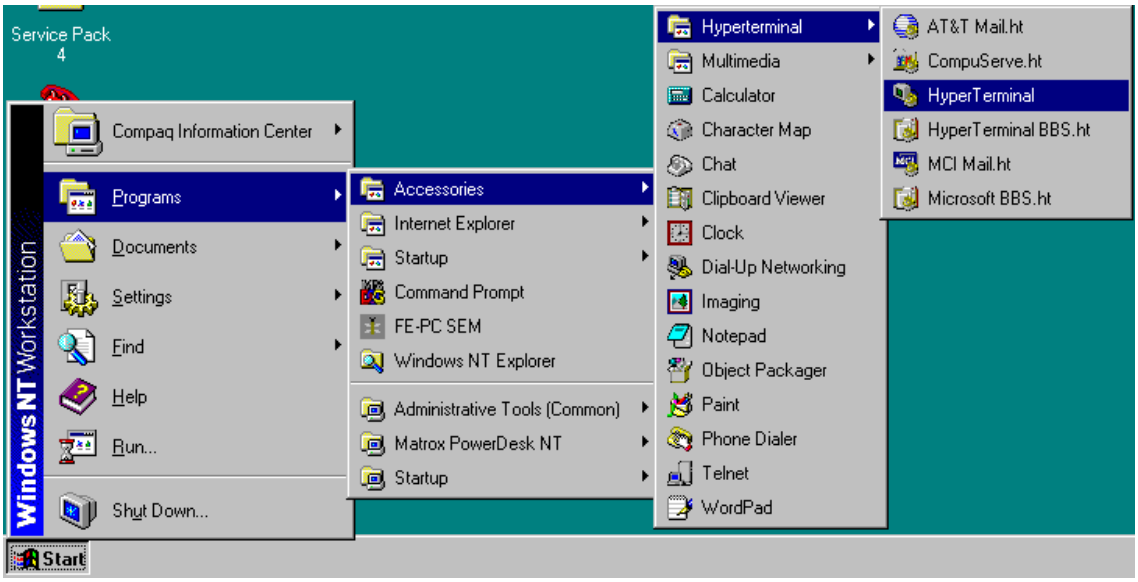

5. Assign [029] to [Where area code] in [Location Information]. Click on [Close].

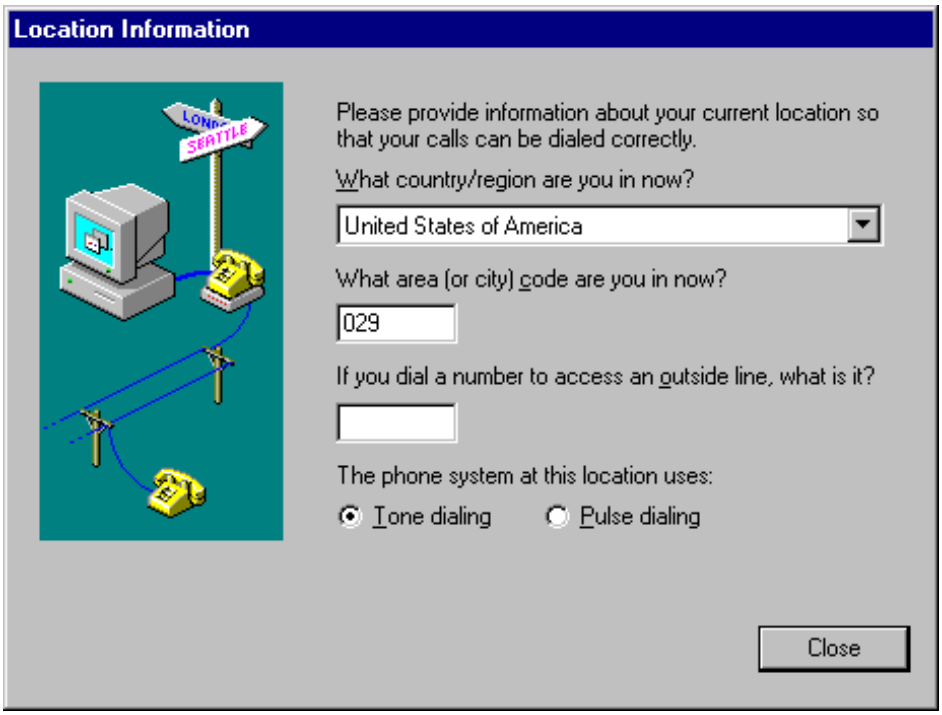

6. When [You need to install a modem before you can make a connection ...] appears, click on [No].

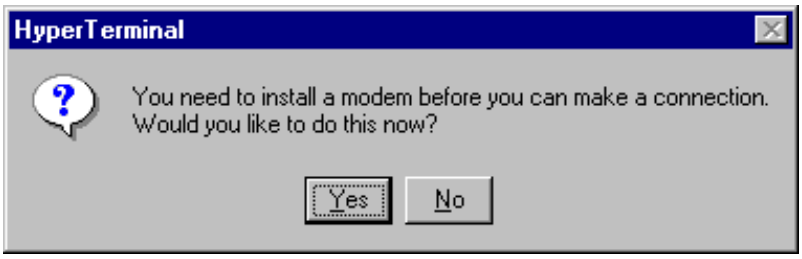

7. When [Name] is requested, type in [Vrt Term], and click on [OK].

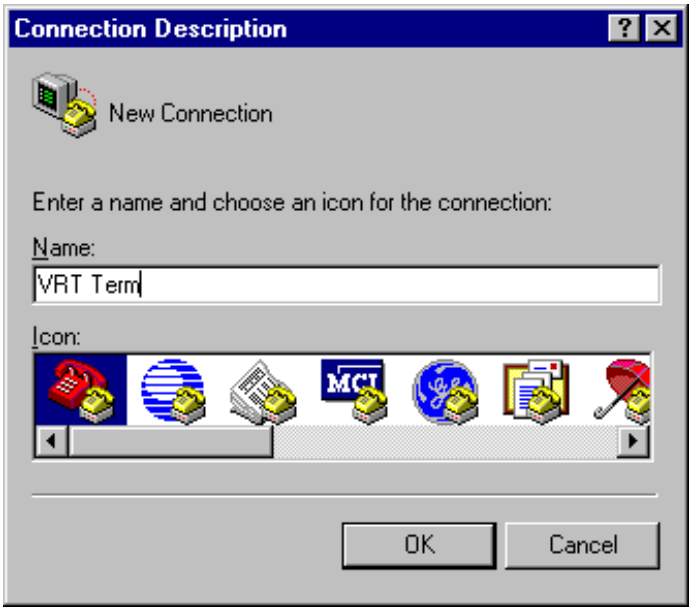

8. Assign [COM1] to [Connect using]. Click on [OK].

9. Set the [COM1Properties] as follows, and click on [OK].

   [Bit per second]: [9600]
   [Data bit]: [8]
   [Parity]: [None]
   [Stop bits]: [1]
   [Flow control]: [Hardware]

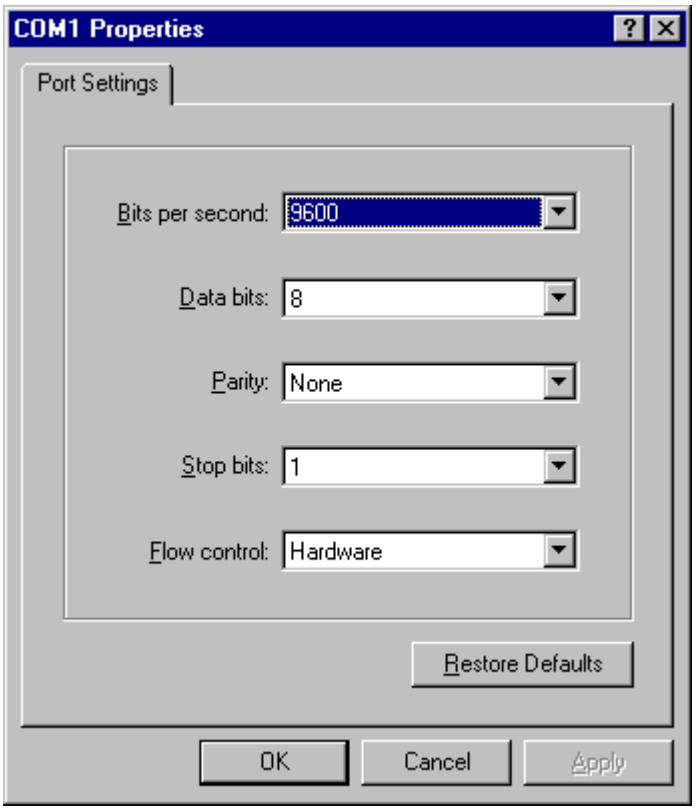

10. Select [File] → [Save As…].

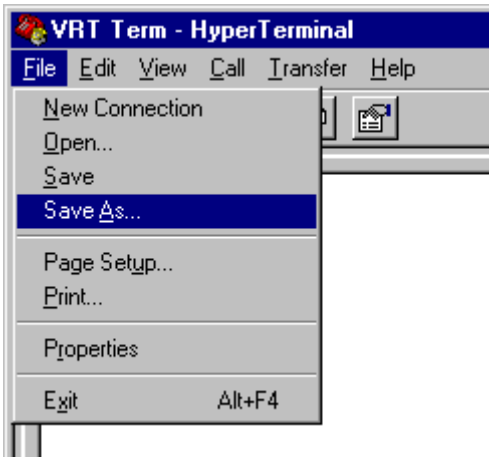

11. Specify [C:\Winnt\Profiles\All Users\Desktop] as the directory in which the file is to be saved, and click on [Save].

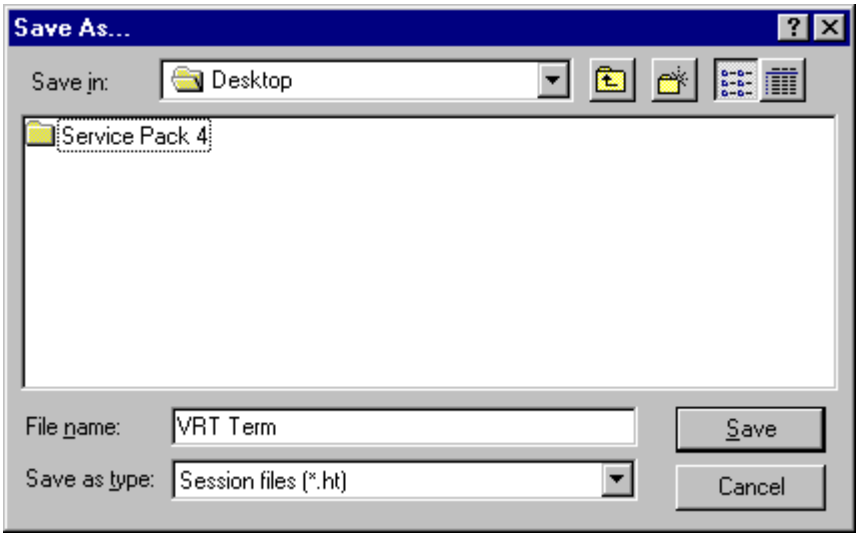

12. On [Hyper Terminal], click on [X].

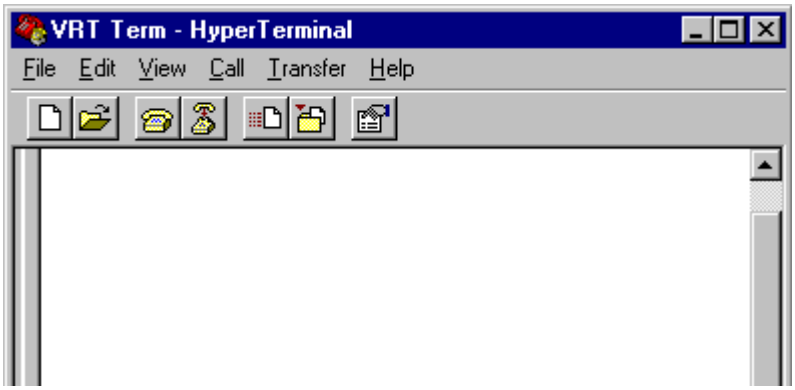

13. When [You are currently connected ...] appears, click on [Yes].

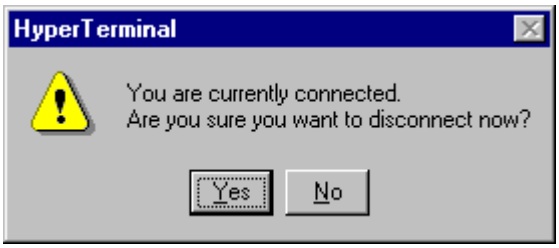

14. Double click on the [Vrt Term] icon to open the [Hyper Terminal].

15. When [You need to install a modem before you can make a connection ...] appears, click on [No].

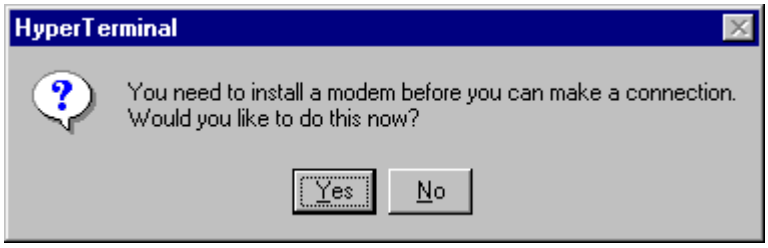

16. On [Hyper Terminal], click on [X].

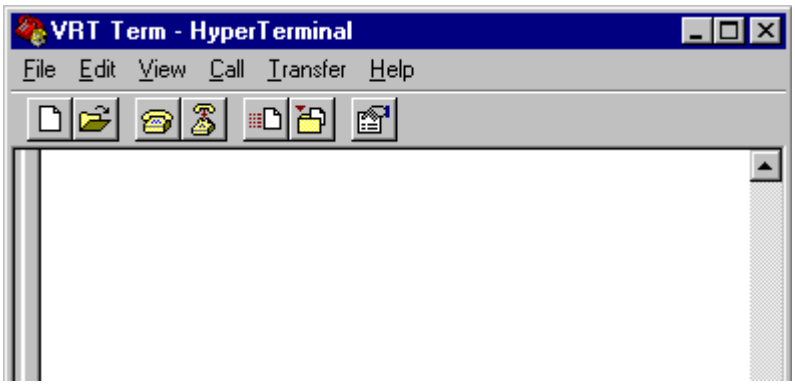

17. When [You are currently connected ...] appears, click on [Yes].

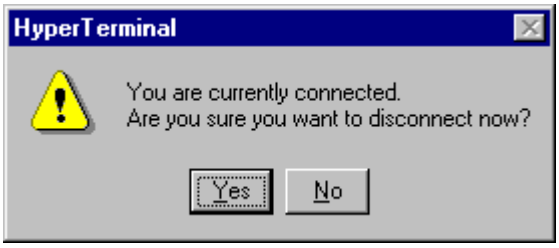

11.6.11 Installing the S-5200 Software

1. Insert the S-5200 software CD-ROM into drive H:.
2. By selecting [Start] → [Programs] → [Windows NT Explorer], open the [Exploring] window.
3. Double click on [H:\Setup.exe] to launch the Installer.

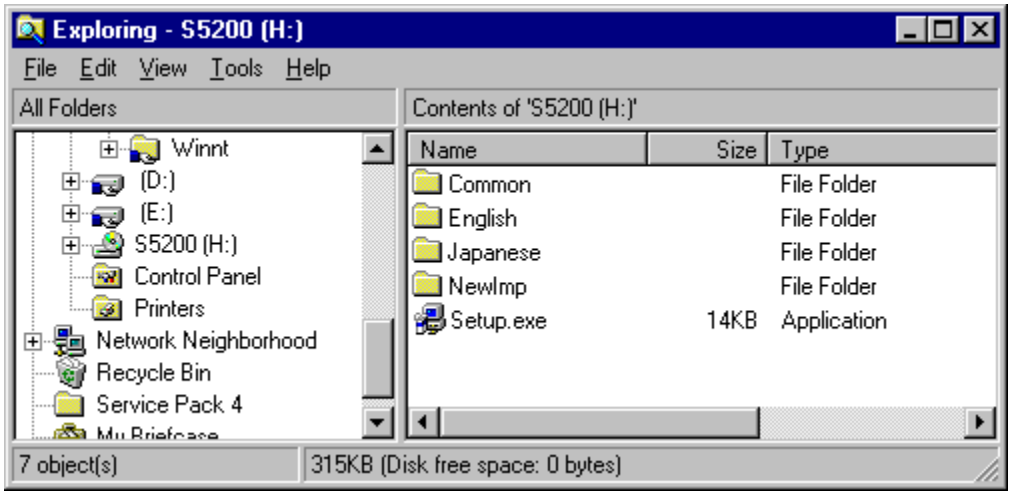

4. When [Welcome to the EF-PC SEM installation program ...] appears, click on [OK]. (The installation process starts.)

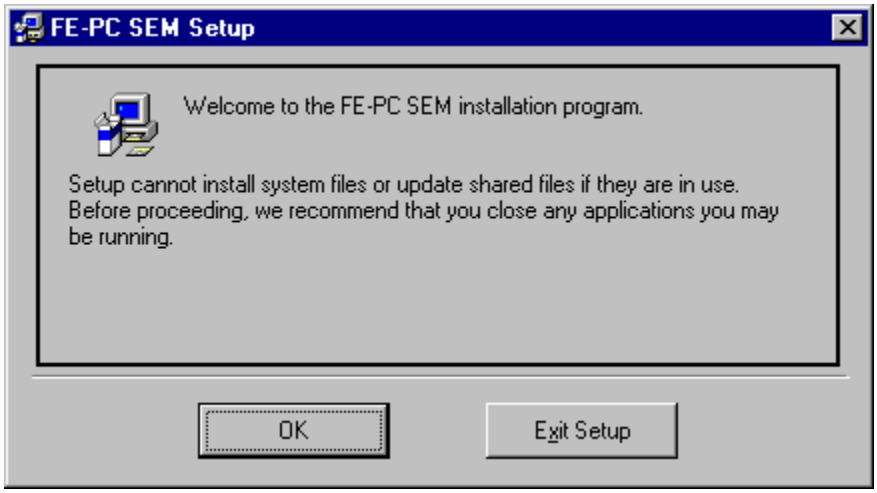

5. When [FE-PC SEM Setup was completed successfully.] appears, click on [OK].

6. Double click on [H:\Common\install.bat] to launch the batch program. (The batch processing starts.))

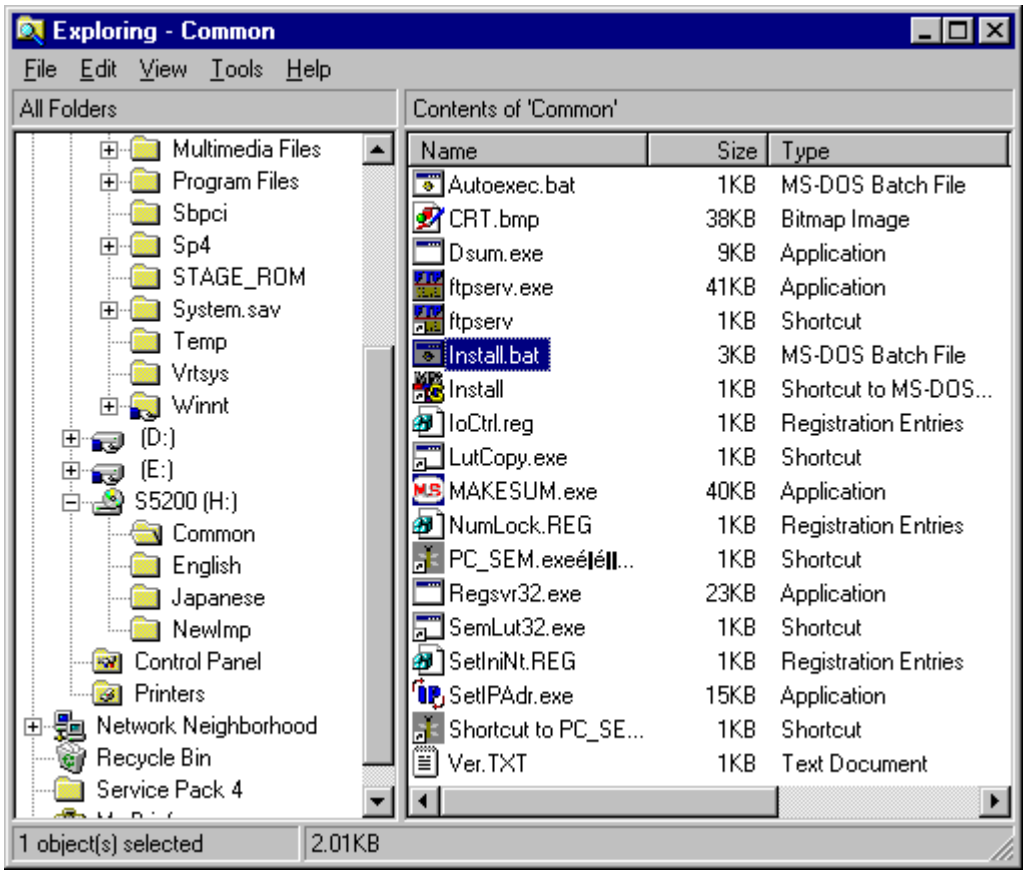

7. When [Information in H:\Common\SetIniNt.REG has been successfully ...] appears, click on [OK].

8. Double click on [H:\NewImp\NewImp.bat] to launch the batch program. (The batch program starts.)

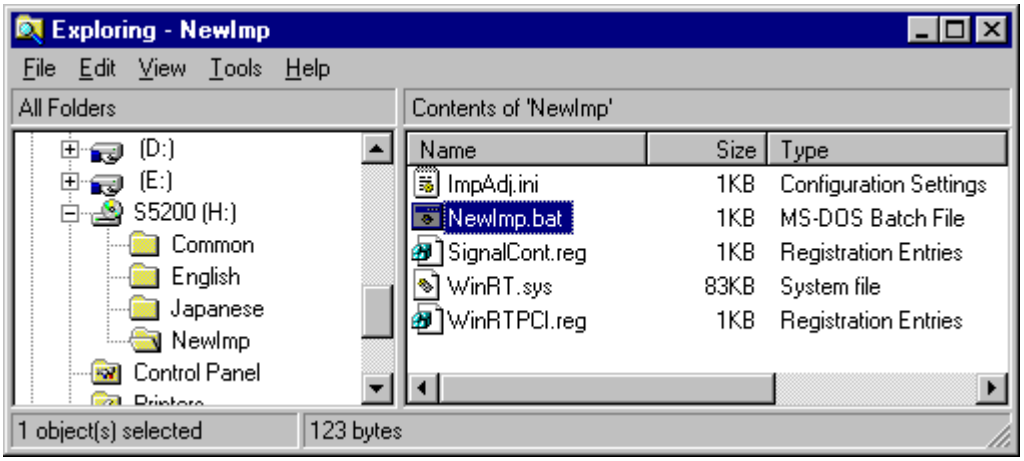

9. When [Information in H:\NewImp\Win RTPCI.REG has been successfully ...] appears, click on [OK].

10. Click on [X] for [Exploring].
11. Remove the S-5200 software CD-R.
12. Select [Start] → [Shut Down].
13. Select [Shut down the computer?]. Click on [Yes].

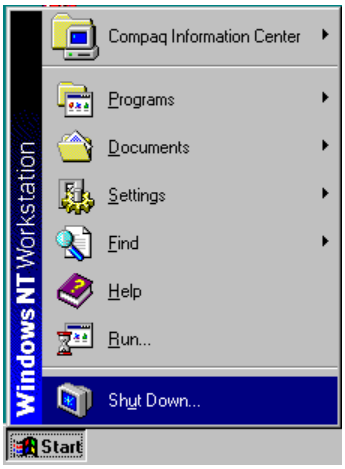

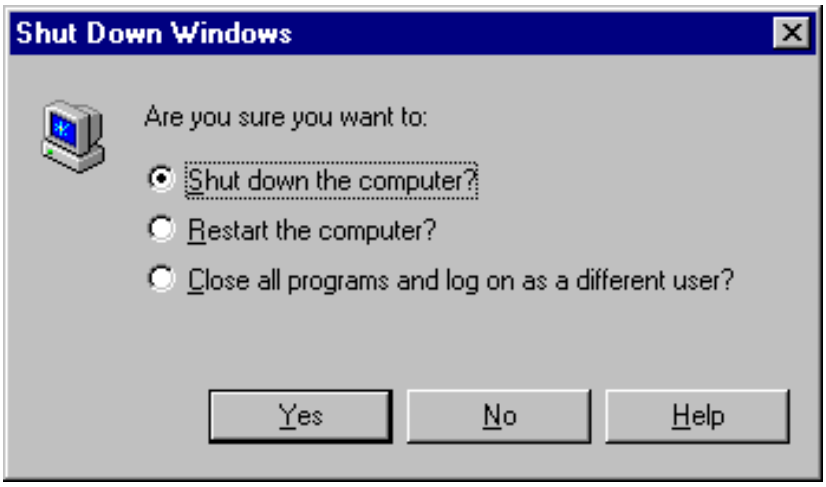

14. Turn off the power for the PC.

Circuit Diagrams for the S-5200 FE-SEM

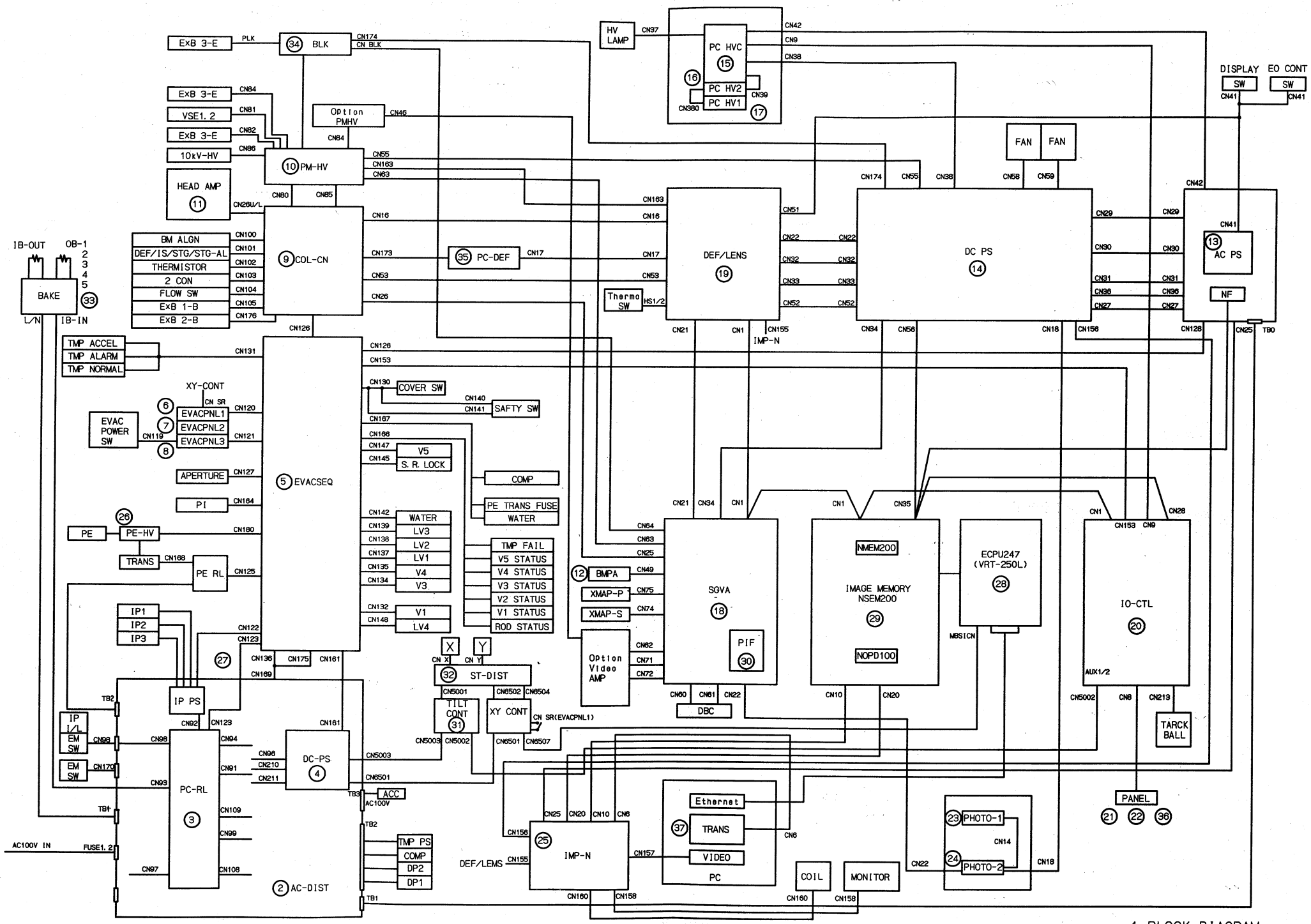

1. BLOCK DIAGRAM

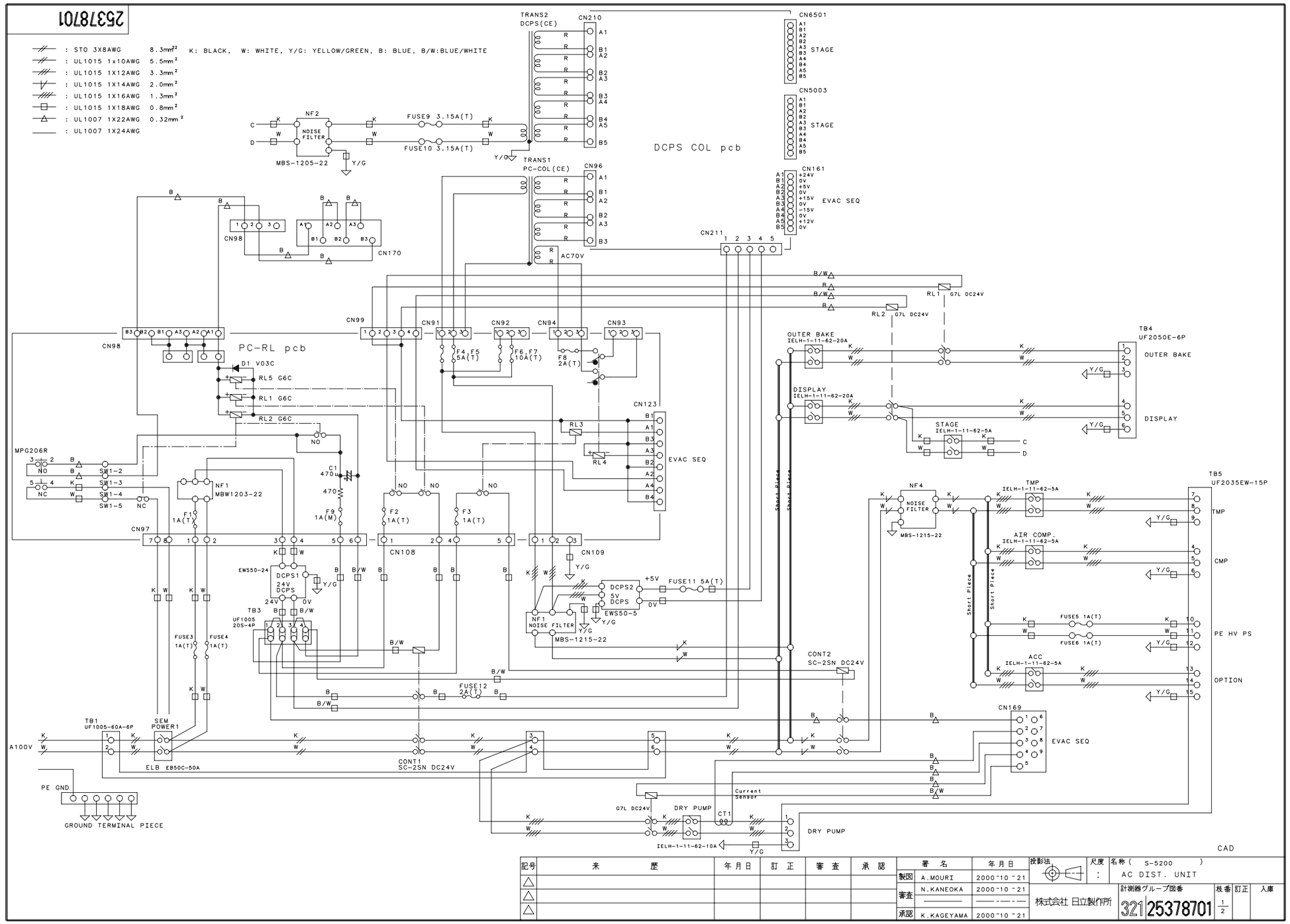

3.AC DIST. UNIT(1/2)

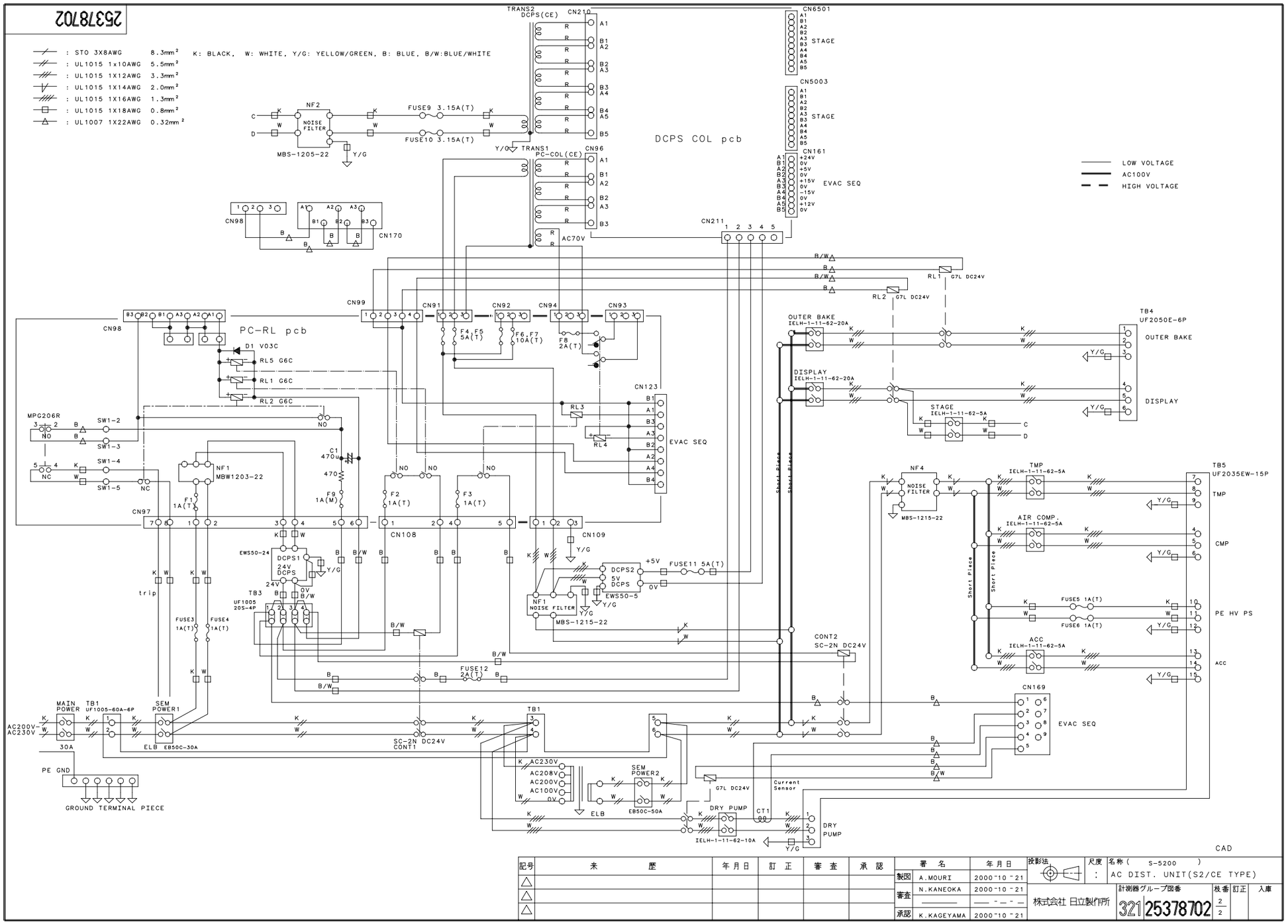
25378702
: STO 3X8AWG 8.3mm²
: UL1015 1x10AWG 5.5mm²
: UL1015 1X12AWG 3.3mm²
: UL1015 1X14AWG 2.0mm²
: UL1015 1X16AWG 1.3mm²
: UL1015 1X18AWG 0.8mm²
: UL1007 1X22AWG 0.32mm²
K: BLACK, W: WHITE, Y/G: YELLOW/GREEN, B: BLUE, B/W:BLUE/WHITE
TRANS2
DCPS(CE)
CN210
CN6501
STAGE
CN5003
STAGE
CN161
EVAC SEQ
NF2
NOISE FILTER
MBS-1205-22
FUSE9 3.15A(T)
FUSE10 3.15A(T)
TRANS1
PC-COL(CE)
CN96
DCPS COL pcb
CN98
CN170
CN211
AC70V
LOW VOLTAGE
AC100V
HIGH VOLTAGE
RL1 G7L DC24V
RL2 G7L DC24V
CN99
CN91
CN92
CN94
CN93
F4,F5 5A(T)
F6,F7 10A(T)
F8 2A(T)
PC-RL pcb
D1 V03C
RL5 G6C
RL1 G6C
RL2 G6C
RL3
RL4
CN123
EVAC SEQ
MPC206R
SW1-2
SW1-3
SW1-4
SW1-5
C1 470u
470
F9 1A(M)
NF1 MBW1203-22
F1 1A(T)
F2 1A(T)
F3 1A(T)
CN97
CN108
CN109
EWS50-24
DCPS1 24V DCPS
TB3 UF1005 20S-4P
FUSE3 1A(T)
FUSE4 1A(T)
trip
DCPS2 5V DCPS
+5V
FUSE11 5A(T)
EWS50-5
NF1 NOISE FILTER
MBS-1215-22
FUSE12 2A(T)
CONT2 SC-2N DC24V
OUTER BAKE IELH-1-11-62-20A
DISPLAY IELH-1-11-62-20A
STAGE IELH-1-11-62-5A
TB4 UF2050E-6P
OUTER BAKE
DISPLAY
Short Piece
NF4 NOISE FILTER
MBS-1215-22
TMP IELH-1-11-62-5A
AIR COMP. IELH-1-11-62-5A
ACC IELH-1-11-62-5A
TB5 UF2035EW-15P
TMP
CMP
PE HV PS
ACC
FUSE5 1A(T)
FUSE6 1A(T)
CN169
EVAC SEQ
MAIN POWER
TB1 UF1005-60A-6P
SEM POWER1
ELB EB50C-30A
AC200V
AC230V
30A
PE GND
GROUND TERMINAL PIECE
SC-2N DC24V CONT1
TB1
AC230V
AC208V
AC200V
AC100V
0V
ELB
SEM POWER2
EB50C-50A
G7L DC24V
DRY PUMP
IELH-1-11-62-10A
Current Sensor
CT1 90
DRY PUMP
CAD
記号 来歴 年月日 訂正 審査 承認
署名 年月日
製図 A.MOURI 2000-10-21
審査 N.KANEOKA 2000-10-21
承認 K.KAGEYAMA 2000-10-21
投影法
尺度 :
名称 (S-5200)
AC DIST. UNIT(S2/CE TYPE)
株式会社 日立製作所
計測器グループ図番 321 25378702
枝番 2/2
訂正
入庫
2.AC DIST. UNIT(S2/CE TYPE)(2/2)

35378372

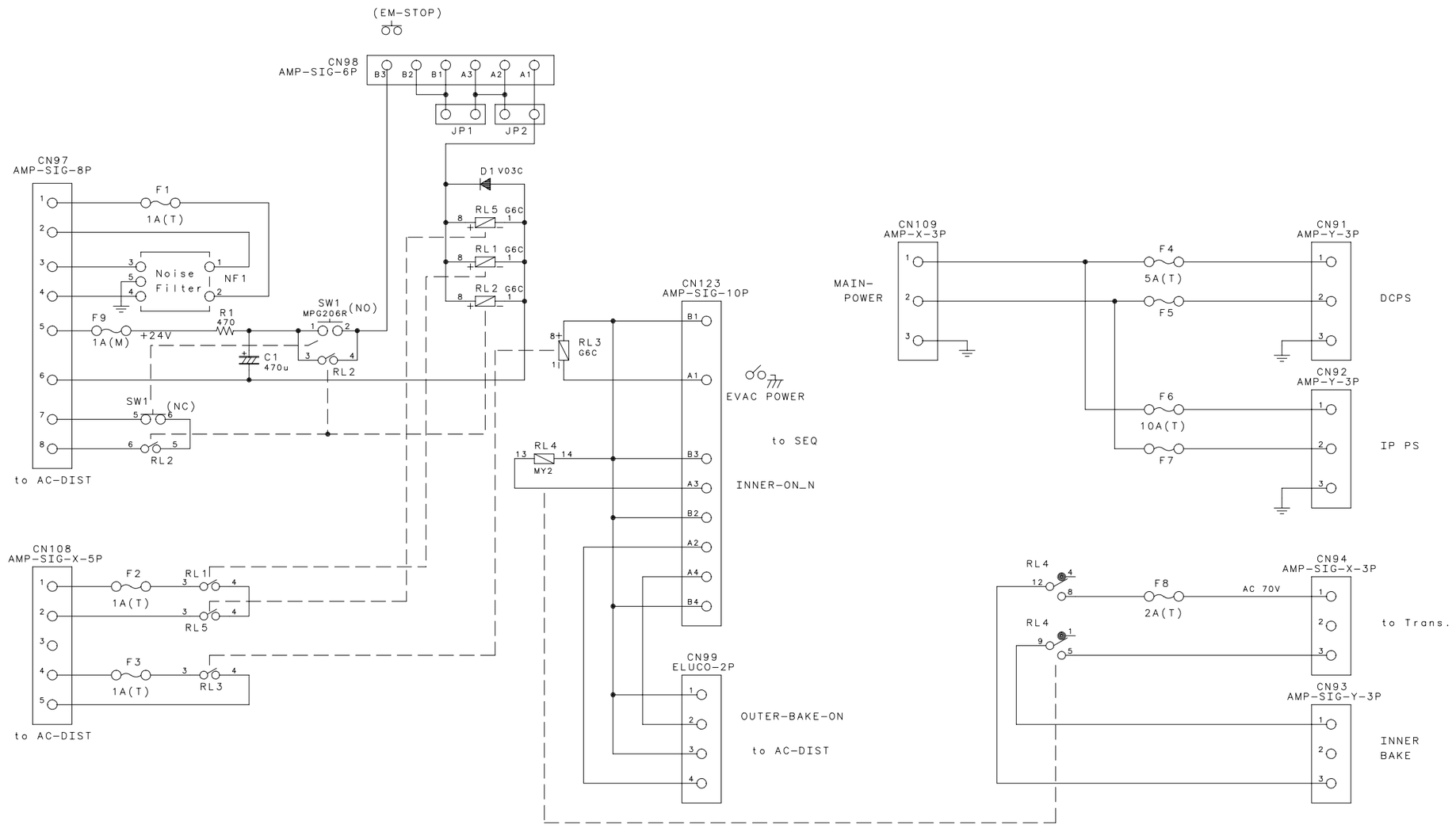

CAD SF376B

記号	来　　歴	年月日	訂　正	審　査	承　認
△					
△					
△					

	署　名	年月日
製図	K.KAGEYAMA	1996-10-31
審査	N.KANEOKA	1996-10-31
	――――	――――
承認	O.YAMADA	1996-10-31

投影法　尺度 :　名称 (S-5200)
PC-RL P.C.B.

株式会社 日立製作所

計測器グループ図番 321 35378372　枝番 1/1　訂正　入庫

KAIRO

3.PC-RL P.C.B.

25378704

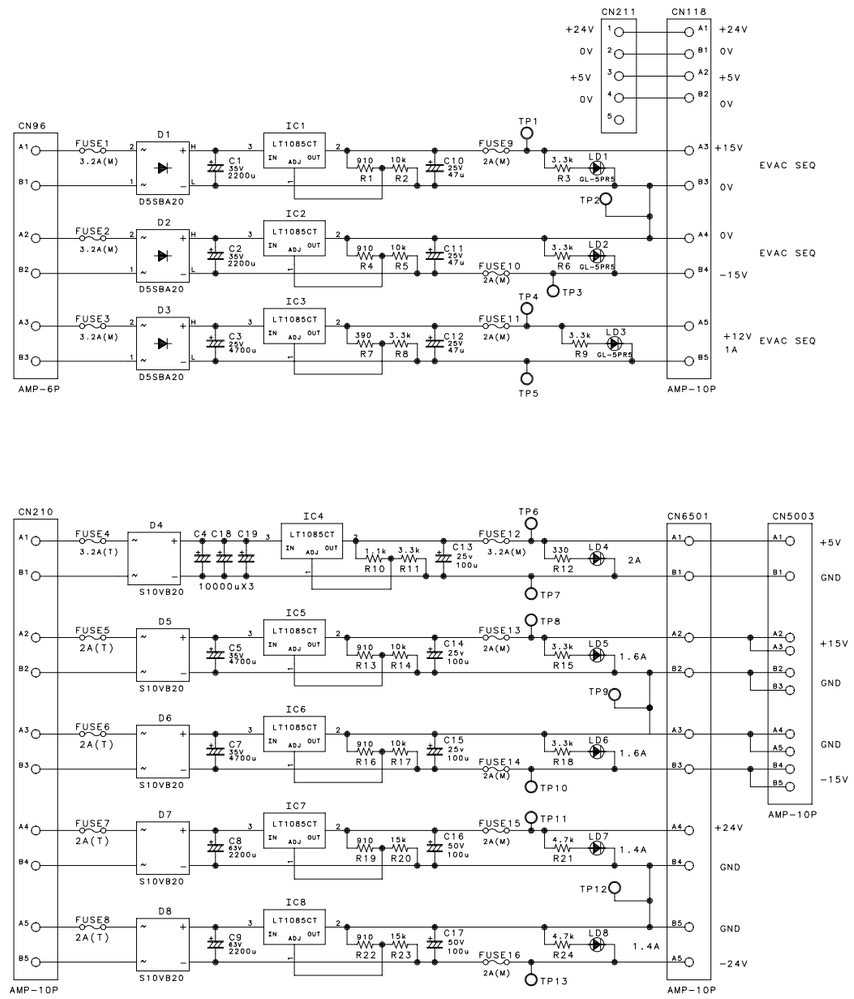

CAD

記号	来歴	年月日	訂正	審査	承認
△					
△					
△					

	署名	年月日
製図	A.MOURI	2000-10-21
審査	N.KANEOKA	2000-10-21
承認	K.KAGEYAMA	2000-10-21

投影法 | 尺度 : | 名称 (S-5200) C-DCPS P.C.B.

株式会社 日立製作所

計測器グループ図番 321 25378704 | 枝番 1/1 | 訂正 | 入庫

4. C-DCPS P.C.B.

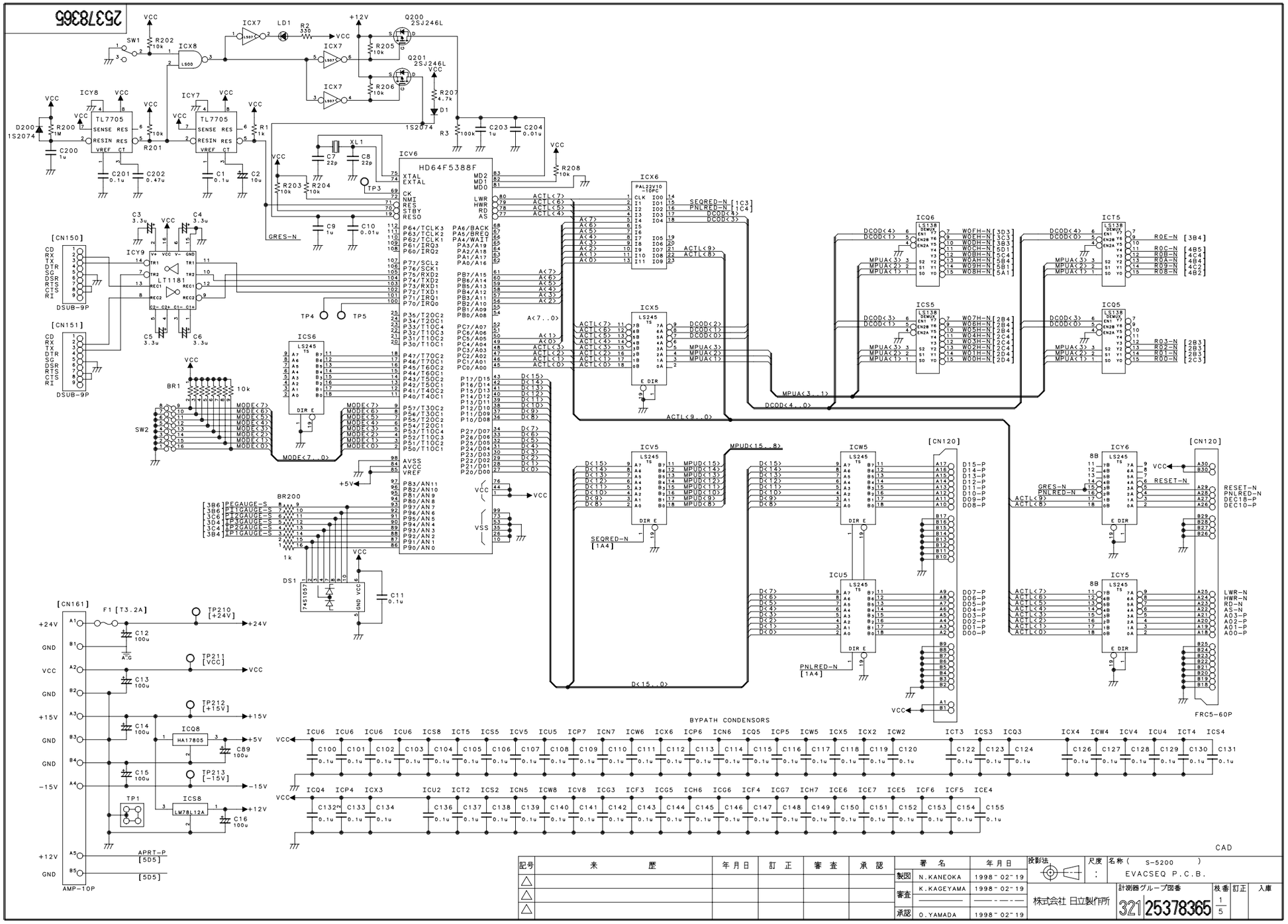
25378365
HD64F5388F
TL7705
LT1181
LS245
LS138
PAL23V10
HA17805
LM78L12A
[CN150]
[CN151]
DSUB-9P
[CN161]
AMP-10P
[CN120]
FRC5-60P
BYPATH CONDENSORS
CAD
EVACSEQ P.C.B.
S-5200
株式会社 日立製作所
321 25378365
5.EVACSEQ P.C.B. (1/5)

25378365

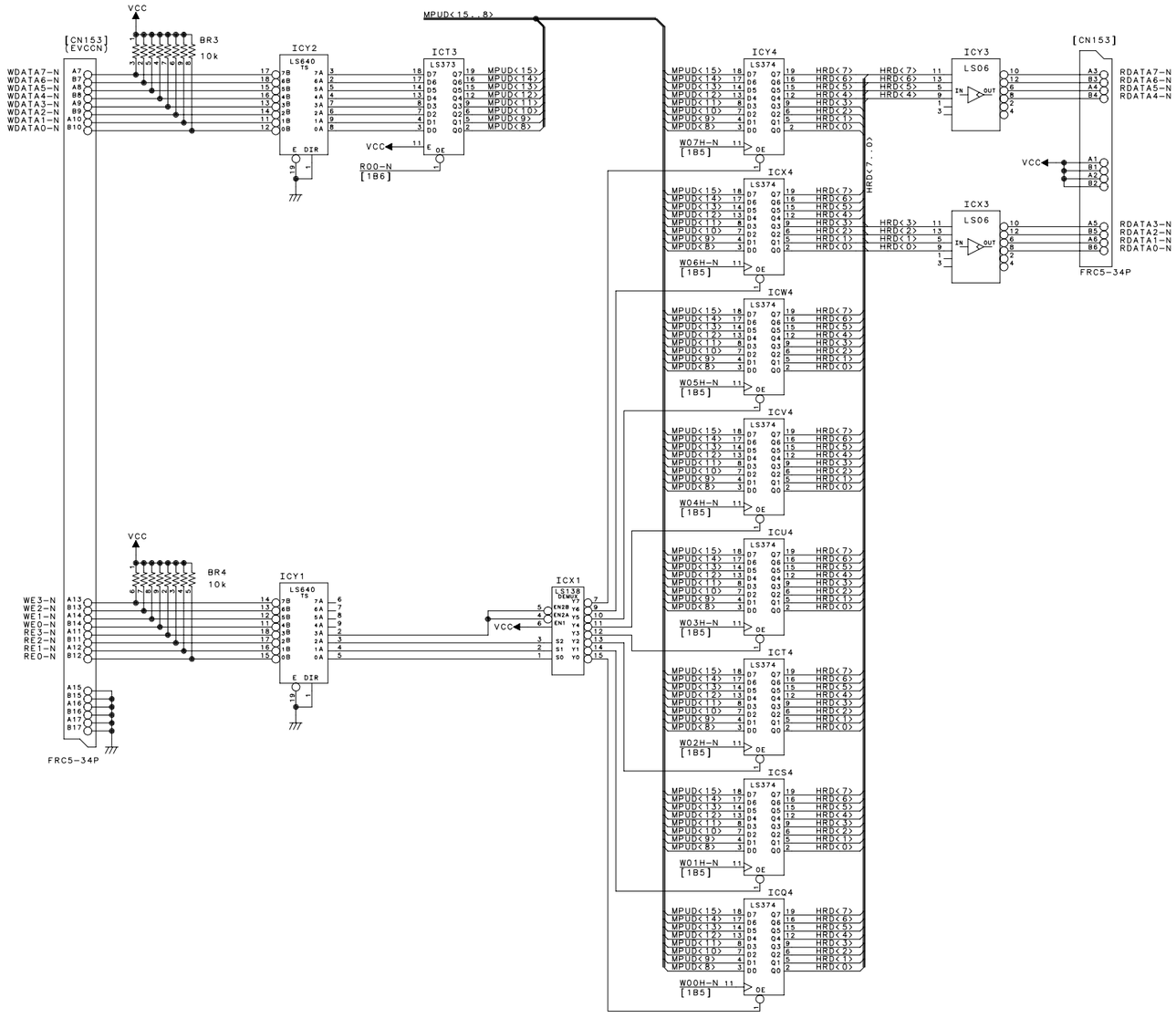

CAD

記号	来　　歴	年月日	訂　正	審　査	承　認		署　名	年月日	投影法	尺度	名称（ S-5200 ）
△						製図	N.KANEOKA	1998-02-19		:	EVACSEQ P.C.B
△						審査	K.KAGEYAMA	1998-02-19	株式会社 日立製作所	計測器グループ図番	枝番 / 訂正 / 入庫
△							———	——-—-—		321 25378365	2/5
						承認	O.YAMADA	1998-02-19			

5.EVACSEQ P.C.B. (2/5)

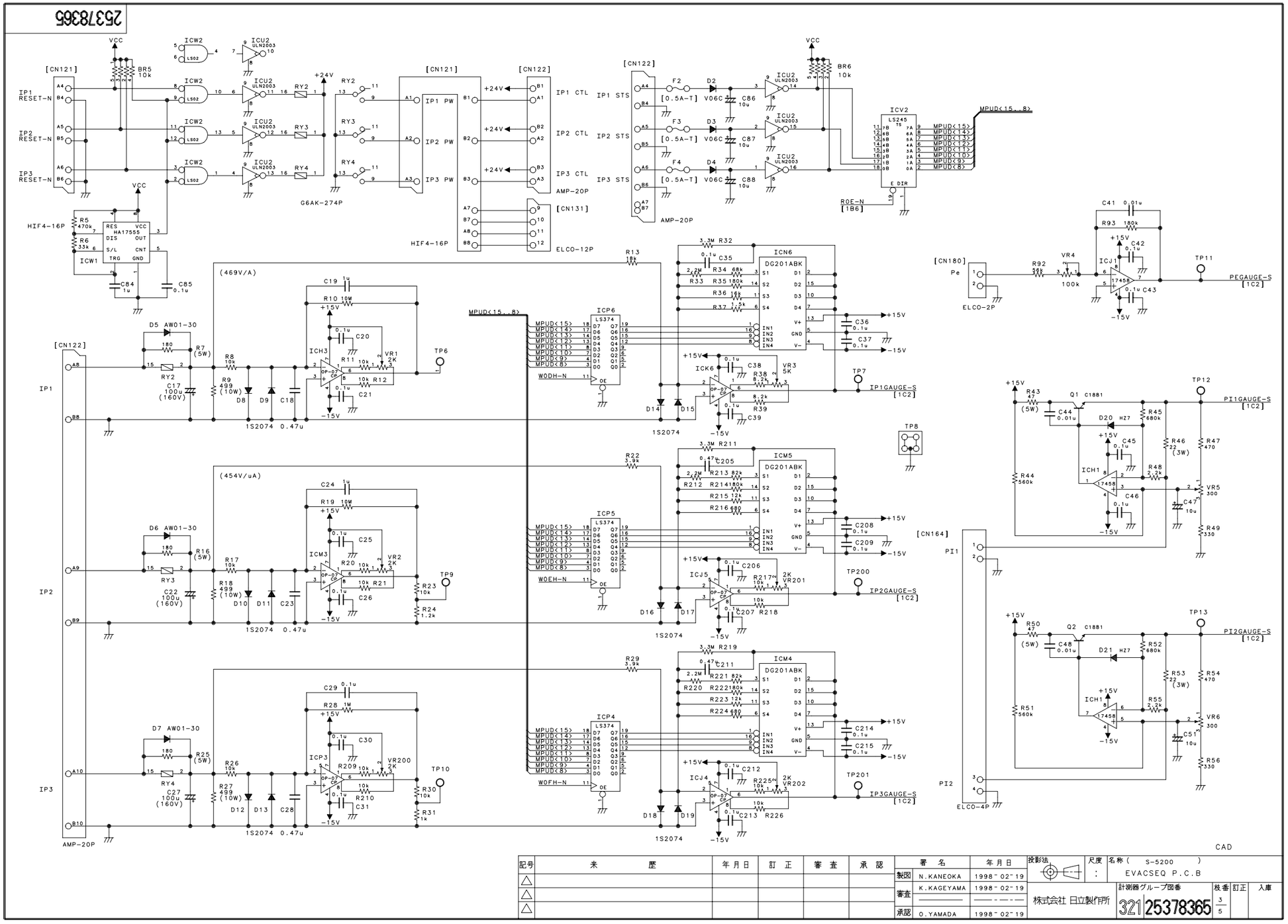
25378365
[CN121]
[CN122]
[CN131]
[CN180]
[CN164]
IP1 RESET-N
IP2 RESET-N
IP3 RESET-N
IP1 CTL
IP2 CTL
IP3 CTL
IP1 STS
IP2 STS
IP3 STS
AMP-20P
ELCO-12P
ELCO-2P
ELCO-4P
HIF4-16P
G6AK-274P
ICV2
LS245
MPUD<15..8>
ROE-N
[1B6]
ICW1
HA17555
ICW2
LS02
ICU2
ULN2003
BR5 10k
BR6 10k
ICP6
LS374
ICN6
DG201ABK
ICH3
ICM3
ICP5
ICM5
ICP3
ICM4
ICP4
ICK6
ICJ5
ICJ4
ICJ1
ICH1
17458
Q1 C1881
Q2 C1881
D20 HZ7
D21 HZ7
WODH-N
WOEH-N
WOFH-N
IP1GAUGE-S
IP2GAUGE-S
IP3GAUGE-S
PEGAUGE-S
PI1GAUGE-S
PI2GAUGE-S
TP6
TP7
TP8
TP9
TP10
TP11
TP12
TP13
TP200
TP201
(469V/A)
(454V/uA)
D5 AW01-30
D6 AW01-30
D7 AW01-30
RY2
RY3
RY4
C17 100u (160V)
C22 100u (160V)
C27 100u (160V)
1S2074
0.47u
CAD
記号
来 歴
年月日
訂 正
審 査
承 認
署 名
製図 N.KANEOKA 1998-02-19
審査 K.KAGEYAMA 1998-02-19
承認 O.YAMADA 1998-02-19
投影法
尺度 :
名称 (S-5200)
EVACSEQ P.C.B
計測器グループ図番
321 25378365
枝番 3/5
訂正
入庫
株式会社 日立製作所
5.EVACSEQ P.C.B. (3/5)

25378365

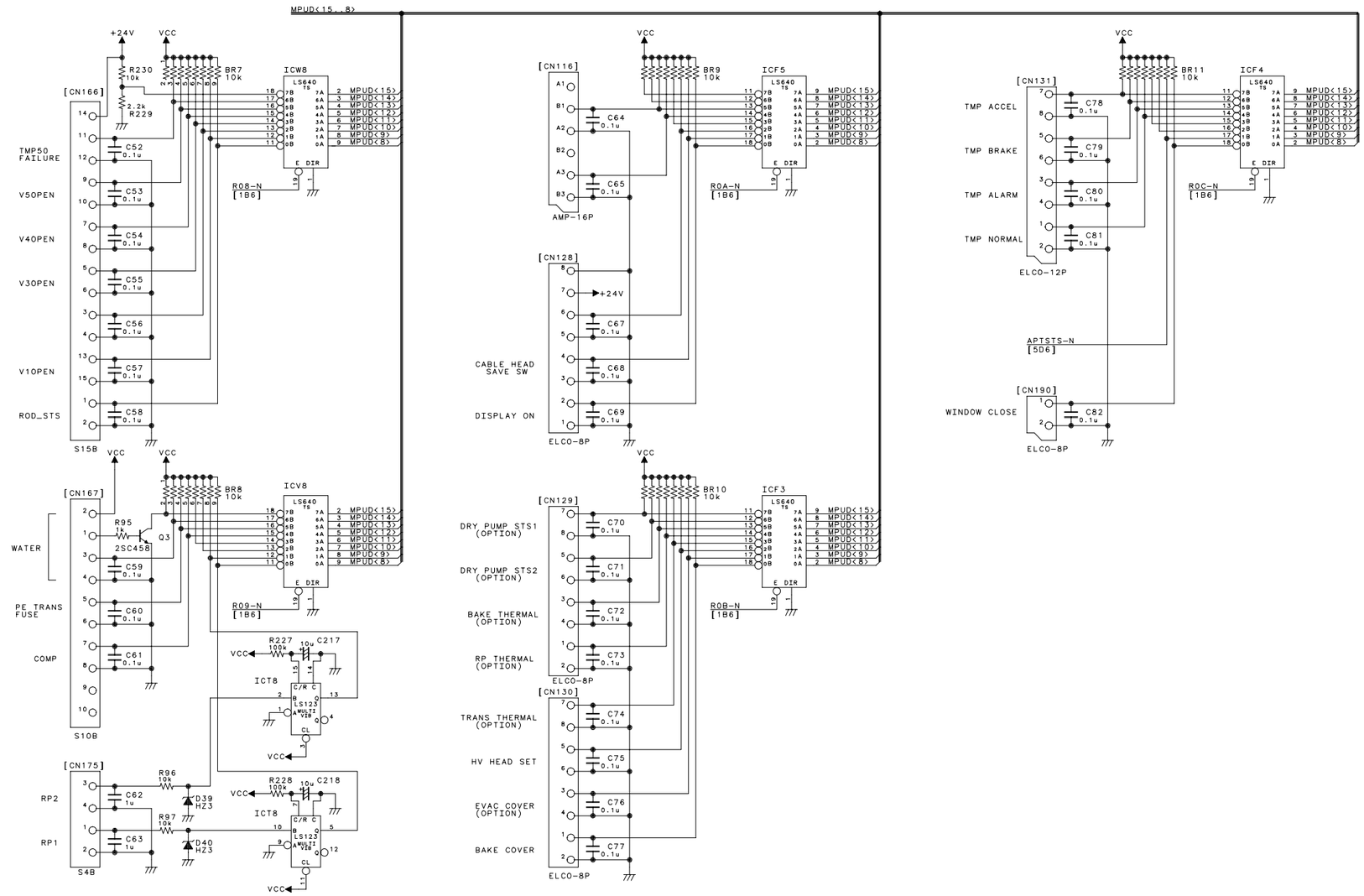

CAD

記号	来歴	年月日	訂正	審査	承認		署名	年月日	投影法	尺度	名称 (S-5200)
△						製図	N.KANEOKA	1998-02-19		:	EVACSEQ P.C.B
△						審査	K.KAGEYAMA	1998-02-19	株式会社 日立製作所		計測器グループ図番 321 25378365
△						承認	O.YAMADA	1998-02-19			枝番 4/5 訂正 入庫

5.EVACSEQ P.C.B. (4/5)

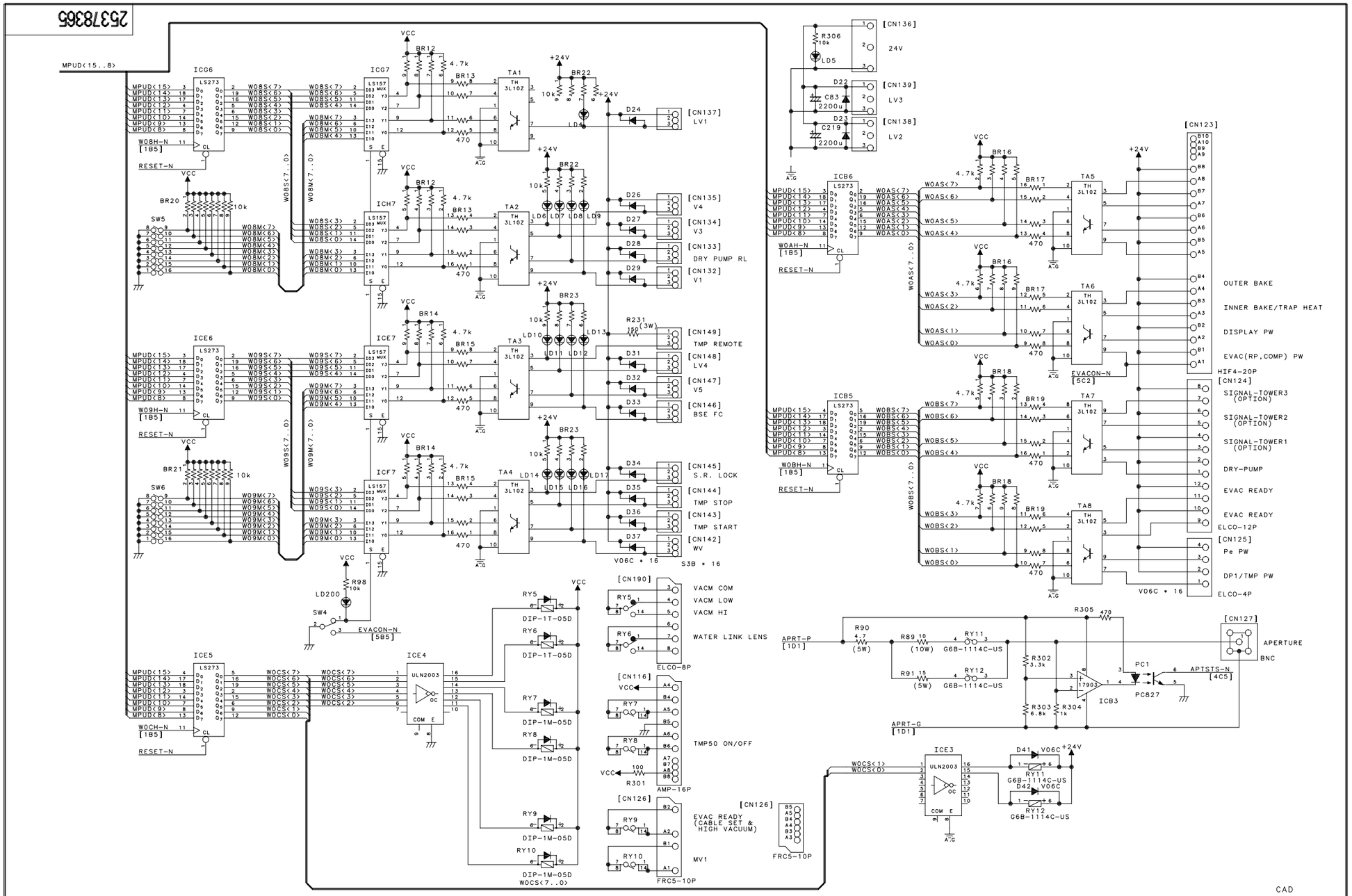

記号	来 歴	年月日	訂 正	審 査	承 認
△					
△					
△					

	署 名	年月日
製図	N.KANEOKA	1998-02-19
審査	K.KAGEYAMA	1998-02-19
承認	O.YAMADA	1998-02-19

投影法 | 尺度 : | 名称 (S-5200) EVACSEQ P.C.B

株式会社 日立製作所

計測器グループ図番 32125378365 | 枝番 5/5 | 訂正 | 入庫

5.EVACSEQ P.C.B. (5/5)

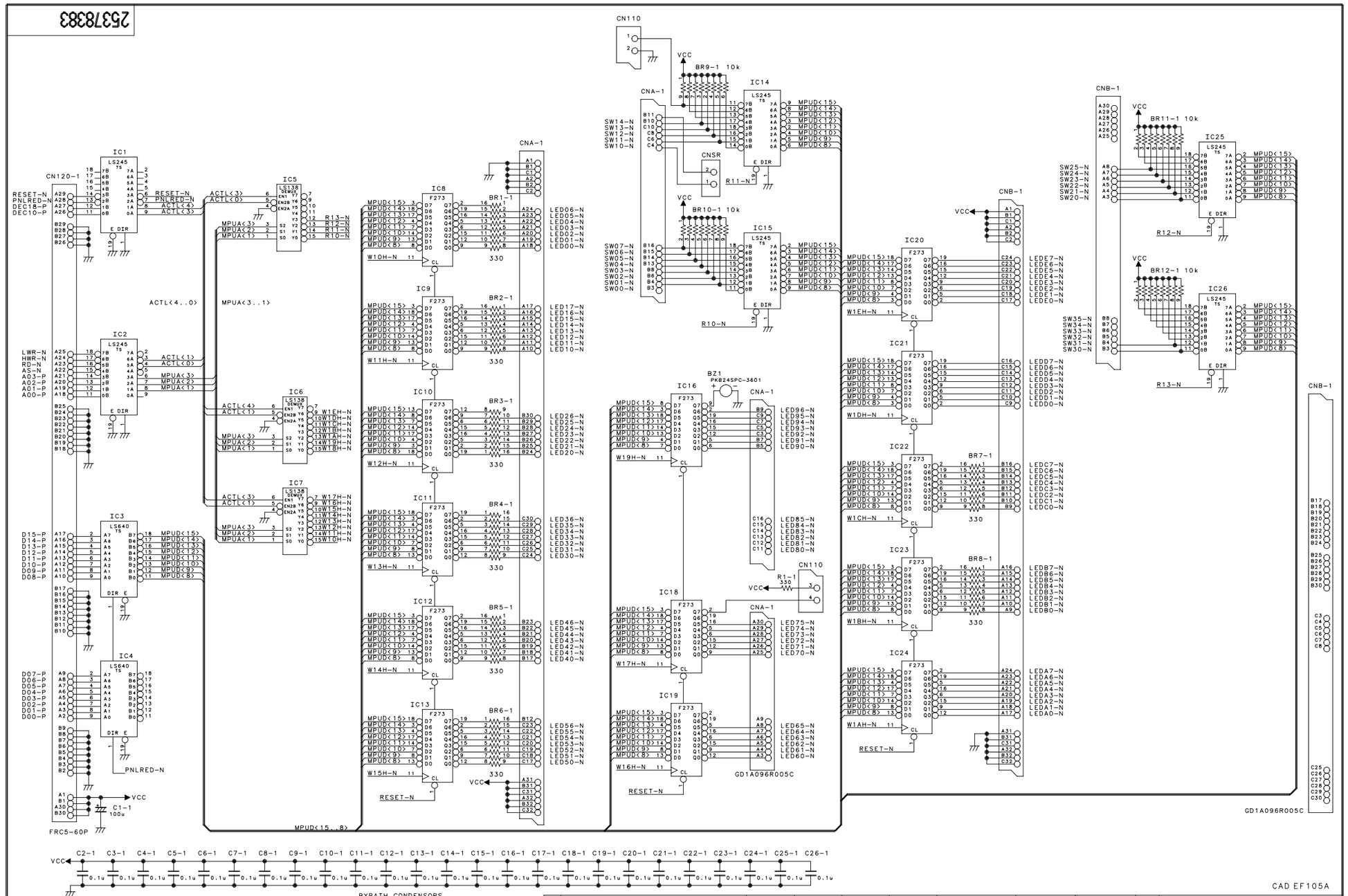
25378383
CN120-1
FRC5-60P
IC1
IC2
IC3
IC4
IC5
IC6
IC7
IC8
IC9
IC10
IC11
IC12
IC13
IC14
IC15
IC16
IC18
IC19
IC20
IC21
IC22
IC23
IC24
IC25
IC26
CNA-1
CNB-1
CN110
CNSR
BZ1
PKB24SPC-3601
GD1A096R005C
BYPATH CONDENSORS
CAD EF105A
6.EVACPNL1 P.C.B.
EVACPNL1 P.C.B.
S-5200
株式会社 日立製作所
K.KAWAMURA
N.KANEOKA
K.KAGEYAMA
1999-03-08

25378384

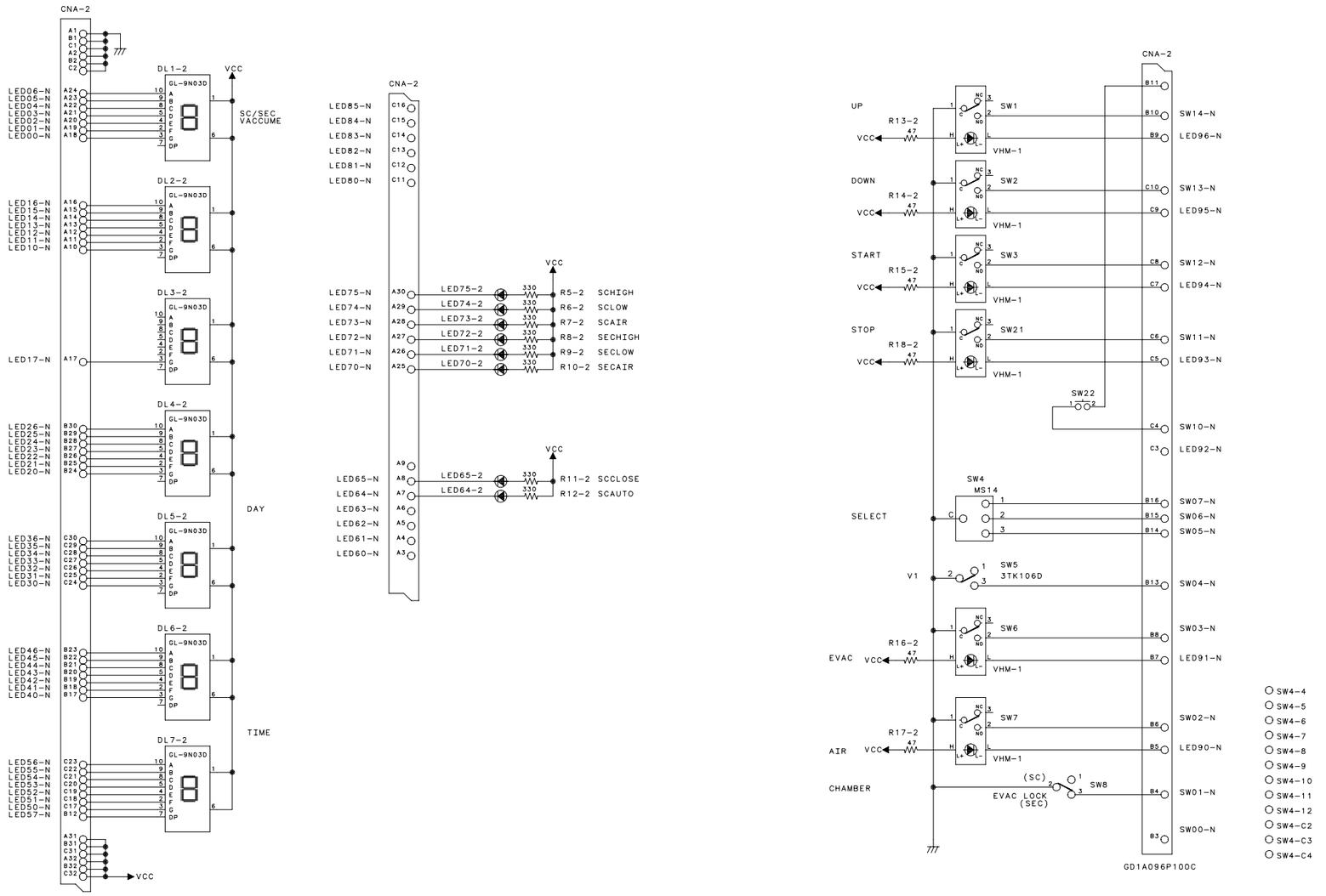

CAD

記号	来　　歴	年月日	訂　正	審　査	承　認		署　名	年月日	投影法	尺度	名称（ S-5200 ）
△						製図	K.KAWAMURA	1999-03-08		:	EVACPNL2 P.C.B.
△						審査	N.KANEOKA	1999-03-08	株式会社 日立製作所		計測器グループ図番 321 25378384
△							———	——-——-			枝番 1/1　訂正　入庫
						承認	K.KAGEYAMA	1999-03-08			

7.EVACPNL2 P.C.B.

25378385

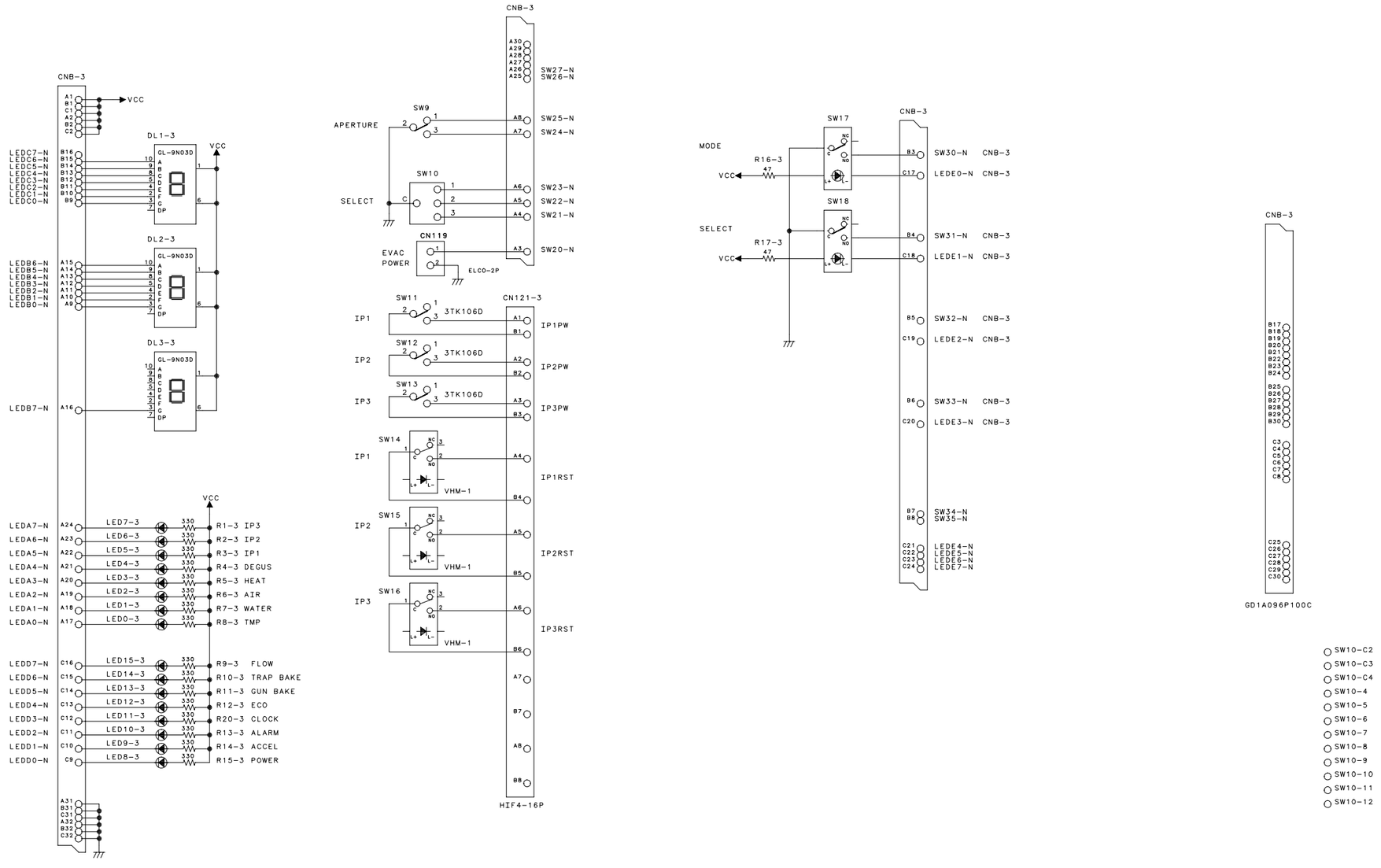

CAD EF107A

記号	来歴	年月日	訂正	審査	承認		署名	年月日
△						製図	K.KAWAMURA	1999-03-08
△						審査	N.KANEOKA	1999-03-08
△							———	——-———
						承認	K.KAGEYAMA	1999-03-08

投影法 | 尺度 : | 名称 (S-5200) EVACPNL3 P.C.B.

株式会社 日立製作所

計測器グループ図番 321 25378385 | 枚番 1/1 | 訂正 | 入庫

8.EVACPNL3 P.C.B.

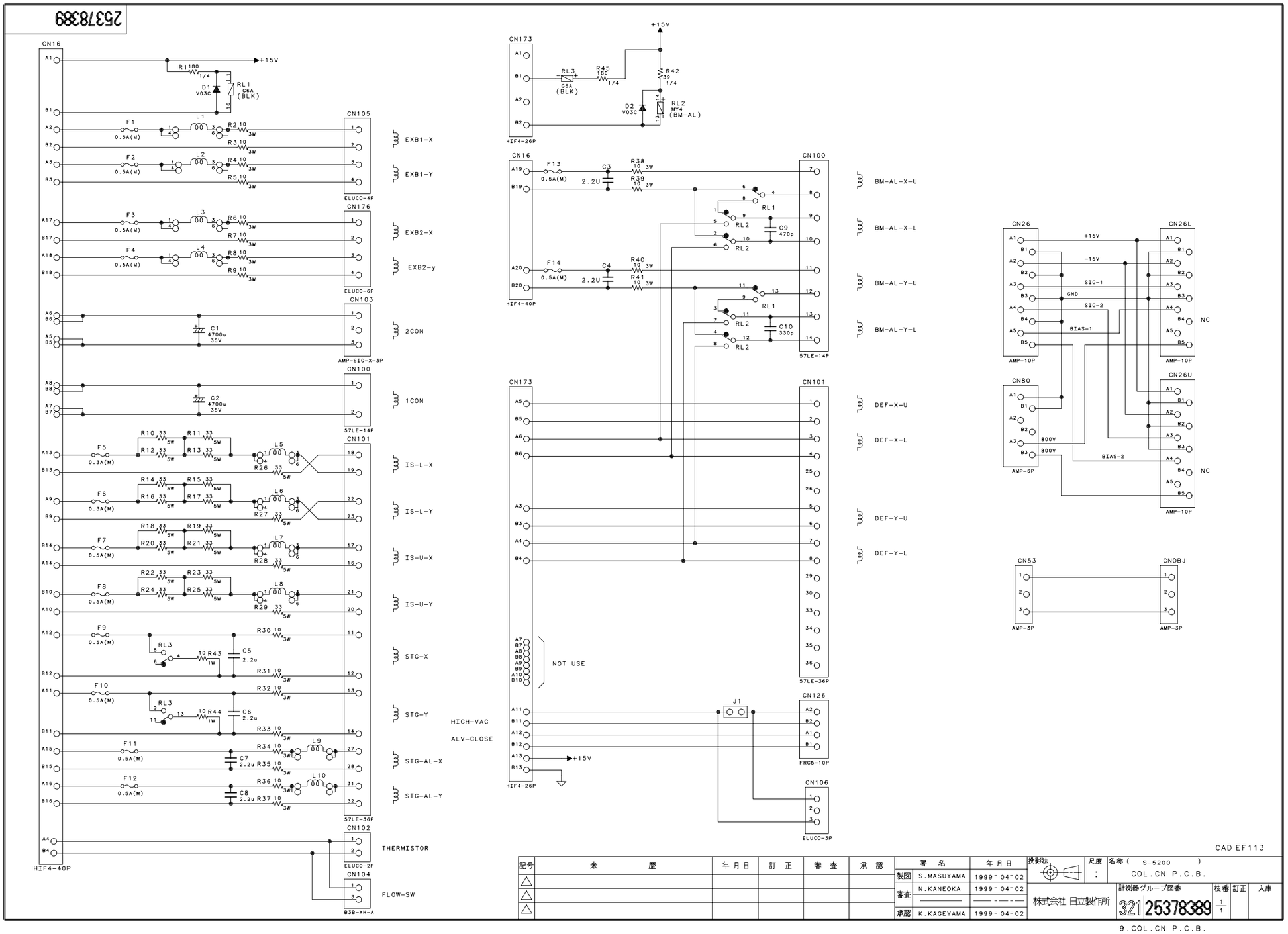
25378389
CN16
HIF4-40P
+15V
R1 180 1/4
D1 V03C
RL1 G6A (BLK)
F1 0.5A(M)
L1
R2 10 3W
R3 10 3W
CN105
ELUCO-4P
EXB1-X
EXB1-Y
F2 0.5A(M)
L2
R4 10 3W
R5 10 3W
F3 0.5A(M)
L3
R6 10 3W
R7 10 3W
CN176
ELUCO-6P
EXB2-X
F4 0.5A(M)
L4
R8 10 3W
R9 10 3W
EXB2-y
CN103
AMP-SIG-X-3P
C1 4700u 35V
2CON
CN100
57LE-14P
C2 4700u 35V
1CON
F5 0.3A(M)
R10 33 5W
R11 33 5W
R12 33 5W
R13 33 5W
L5
R26 33 5W
CN101
IS-L-X
F6 0.3A(M)
R14 33 5W
R15 33 5W
R16 33 5W
R17 33 5W
L6
R27 33 5W
IS-L-Y
F7 0.5A(M)
R18 33 5W
R19 33 5W
R20 33 5W
R21 33 5W
L7
R28 33 5W
IS-U-X
F8 0.5A(M)
R22 33 5W
R23 33 5W
R24 33 5W
R25 33 5W
L8
R29 33 5W
IS-U-Y
F9 0.5A(M)
RL3
R43 10 1W
C5 2.2u
R30 10 3W
R31 10 3W
STG-X
F10 0.5A(M)
RL3
R44 10 1W
C6 2.2u
R32 10 3W
R33 10 3W
STG-Y
F11 0.5A(M)
C7 2.2u
R34 10 3W
R35 10 3W
L9
STG-AL-X
F12 0.5A(M)
C8 2.2u
R36 10 3W
R37 10 3W
L10
STG-AL-Y
57LE-36P
CN102
ELUCO-2P
THERMISTOR
CN104
B3B-XH-A
FLOW-SW
CN173
HIF4-26P
RL3 G6A (BLK)
R45 180 1/4
R42 39 1/4
D2 V03C
RL2 W4 (BM-AL)
CN16
HIF4-40P
F13 0.5A(M)
C3 2.2U
R38 10 3W
R39 10 3W
F14 0.5A(M)
C4 2.2U
R40 10 3W
R41 10 3W
RL1
RL2
C9 470p
C10 330p
CN100
57LE-14P
BM-AL-X-U
BM-AL-X-L
BM-AL-Y-U
BM-AL-Y-L
CN173
HIF4-26P
NOT USE
CN101
57LE-36P
DEF-X-U
DEF-X-L
DEF-Y-U
DEF-Y-L
HIGH-VAC
ALV-CLOSE
J1
CN126
FRC5-10P
CN106
ELUCO-3P
CN26
AMP-10P
CN26L
AMP-10P
+15V
-15V
SIG-1
GND
SIG-2
BIAS-1
NC
CN80
AMP-6P
800V
BIAS-2
CN26U
AMP-10P
CN53
AMP-3P
CNOBJ
AMP-3P
CAD EF113
記号
来歴
年月日
訂正
審査
承認
署名
製図 S.MASUYAMA 1999-04-02
審査 N.KANEOKA 1999-04-02
承認 K.KAGEYAMA 1999-04-02
投影法
尺度 :
名称 (S-5200)
COL.CN P.C.B.
株式会社 日立製作所
計測器グループ図番
321 25378389
枝番 1/1
訂正
入庫
9.COL.CN P.C.B.

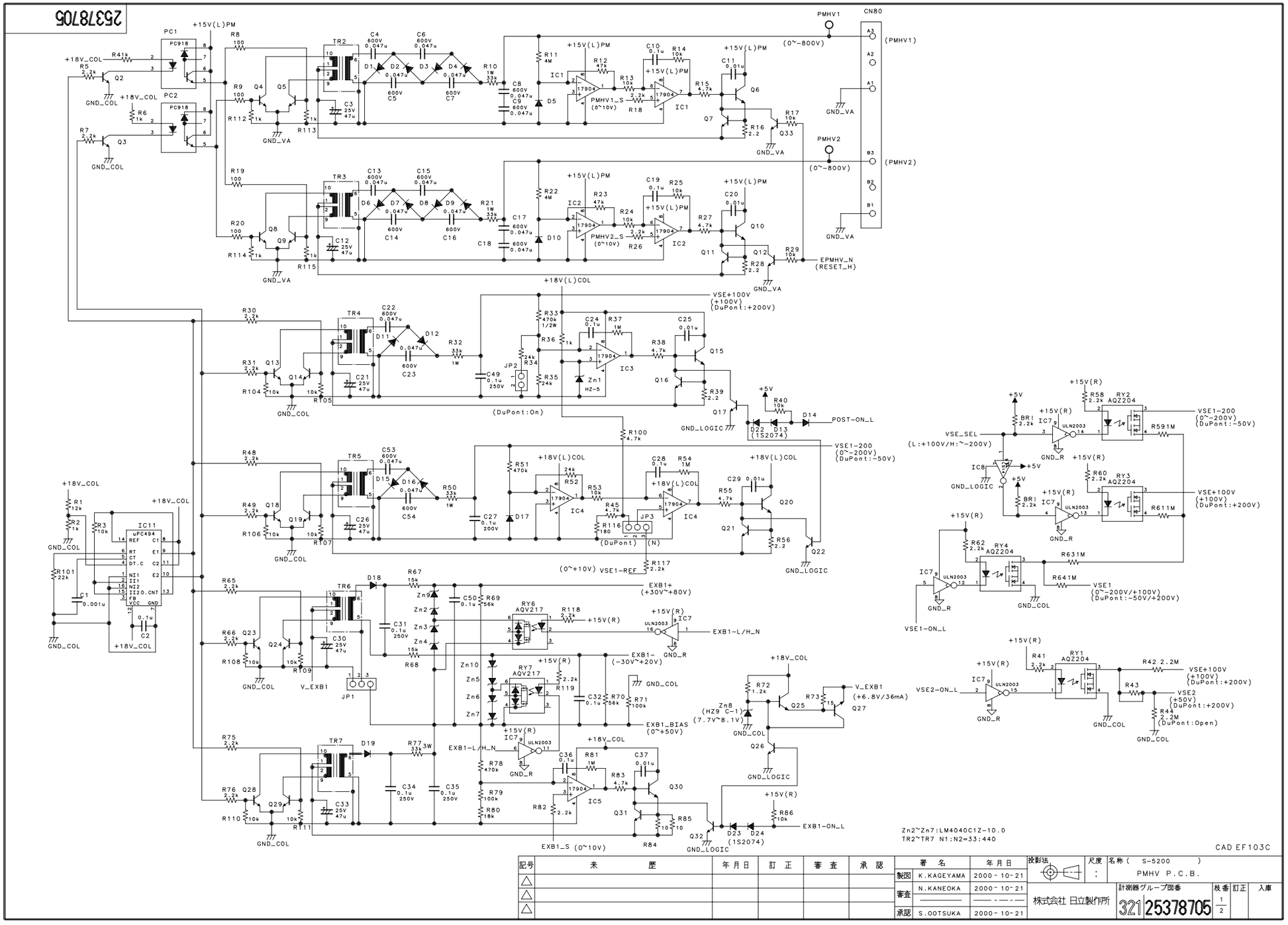

記号	来 歴	年月日	訂 正	審 査	承 認
△					
△					
△					

	署 名	年月日
製図	K.KAGEYAMA	2000-10-21
審査	N.KANEOKA	2000-10-21
承認	S.OOTSUKA	2000-10-21

投影法 | 尺度 : | 名称(S-5200) PMHV P.C.B.

株式会社 日立製作所

計測器グループ図番 321 25378705 | 枚番 1/2 | 訂正 | 入庫

10.PMHV P.C.B.(1/2)

25378705

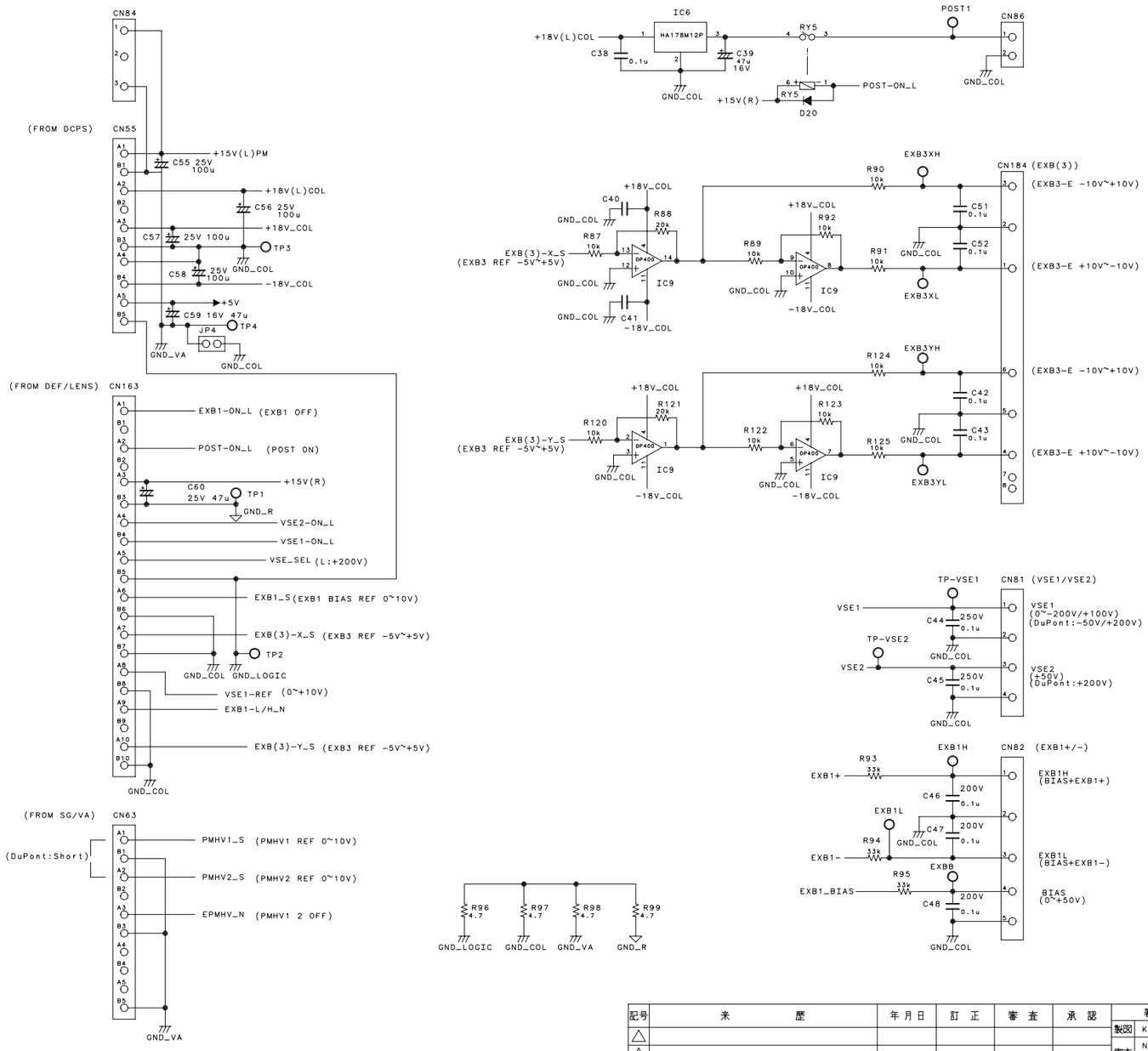

CAD EF103C

記号	来 歴	年月日	訂 正	審 査	承 認
△					
△					
△					

	署 名	年月日
製図	K.KAGEYAMA	2000-10-21
審査	N.KANEOKA	2000-10-21
	———	———
承認	S.OOTUKA	2000-10-21

投影法 | 尺度 : | 名称 (S-5200) PMHV P.C.B.

株式会社 日立製作所

計測器グループ図番 321 25378705 | 枝番 2/2 | 訂正 | 入庫

10.PMHV P.C.B.(2/2)

35378706

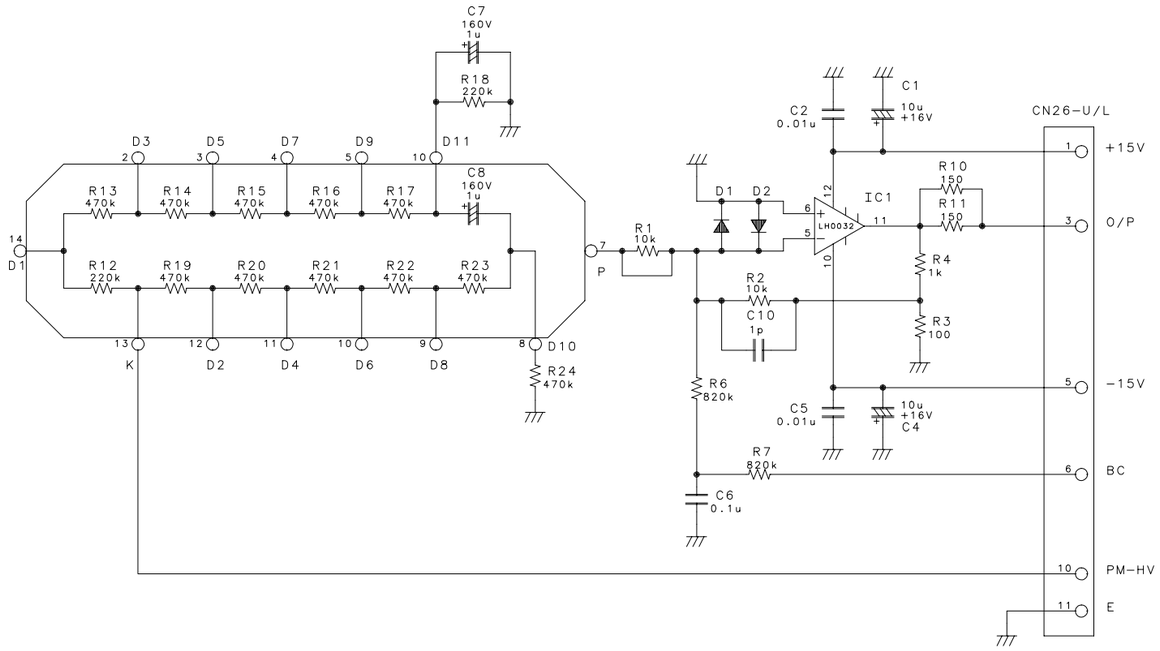

R12,18 220k
R13-R17 470k
R19-R24 470k
11R=2.5M

CAD

記号	来　　歴	年月日	訂　正	審　査	承　認
△					
△					
△					

	署　名	年月日
製図	K.KAGEYAMA	2000-10-21
審査	N.KANEOKA	2000-10-21
	――――	――――
承認	S.OOTUKA	2000-10-21

投影法　尺度 :　名称（ S-5200 ）HEAD AMP P.C.B.

株式会社 日立製作所

計測器グループ図番 321 35378706　枝番 1/1　訂正　入庫

11.HEAD AMP P.C.B.

KAIRO

35378707

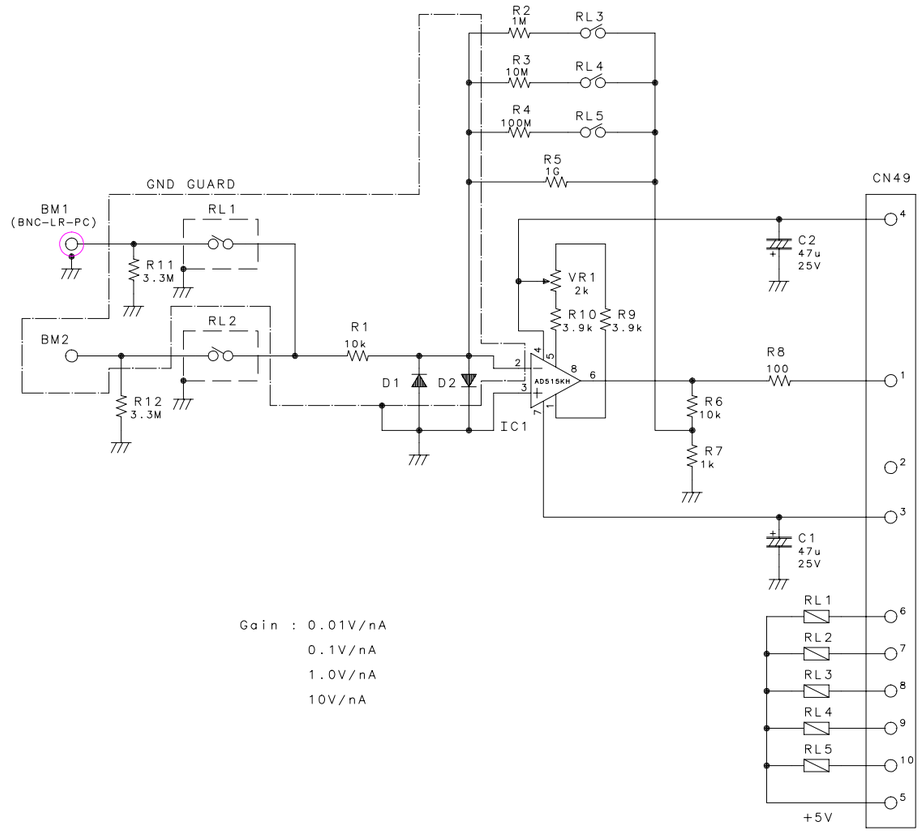

CAD

記号	来　　歴	年月日	訂　正	審　査	承　認
△					
△					
△					

	署　名	年月日
製図	K.KAGEYAMA	2000-10-21
審査	N.KANEOKA	2000-10-21
	――――	――――
承認	S.OOTUKA	2000-10-21

投影法　尺度 :　名称 (S-5200)
BEAM MONITOR P.C.B.

株式会社 日立製作所

計測器グループ図番 321 35378707　枝番 1/1　訂正　入庫

12.BEAM MONITOR P.C.B.

KAIRO

35378724

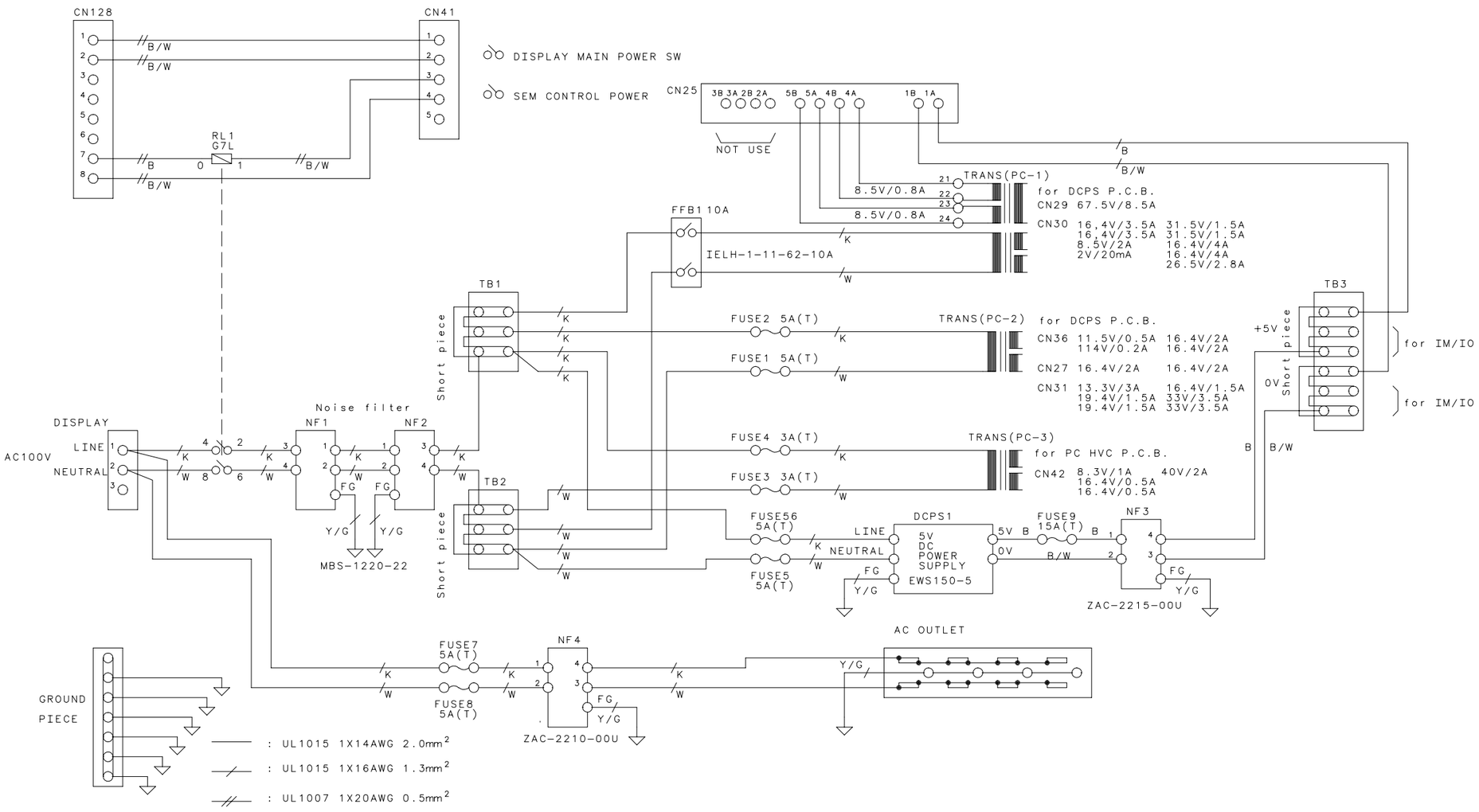

K: BLACK, W: WHITE, Y/G: YELLOW/GREEN, B:BLUE, B/W: BLUE/WHITE

CAD

記号	来歴	年月日	訂正	審査	承認
△					
△					
△					

	署名	年月日
製図	A.MOURI	2000-10-21
審査	N.KANEOKA	2000-10-21
承認	K.KAGEYAMA	2000-10-21

投影法 | 尺度 : | 名称 (S-5200) ACPS UNIT

株式会社 日立製作所

計測器グループ図番 321 35378724 | 枝番 1/1 | 訂正 | 入庫

13.ACPS UNIT

KAIRO

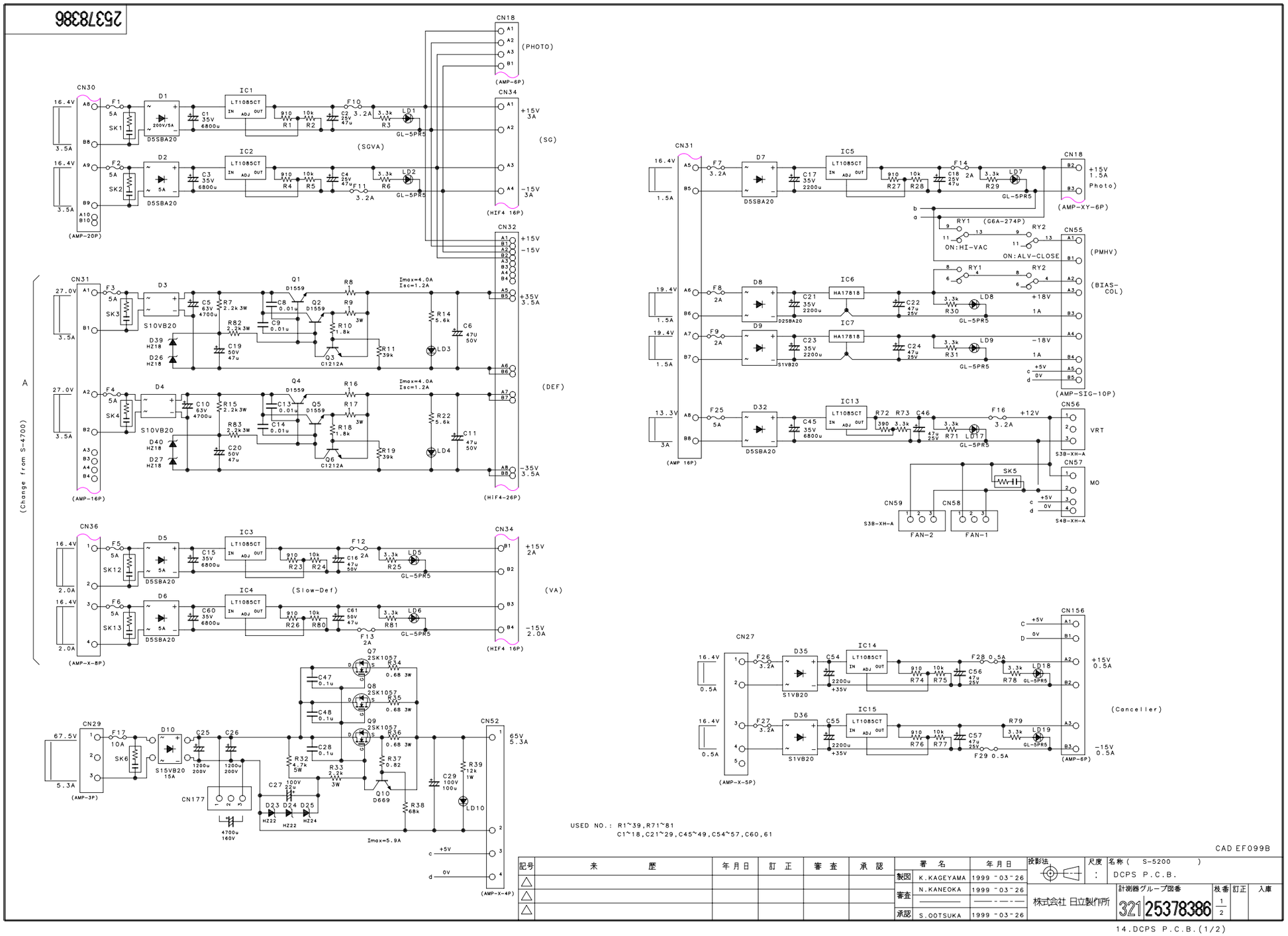

(Change from S-4700)

25378386

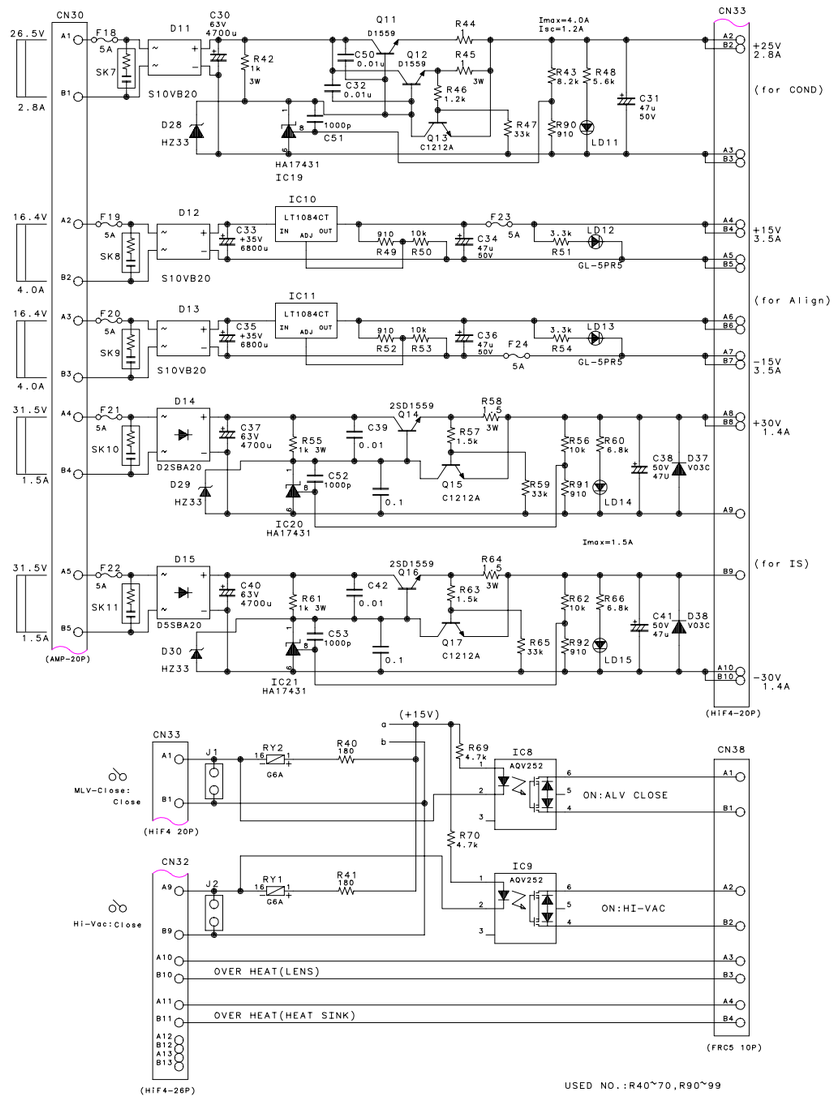

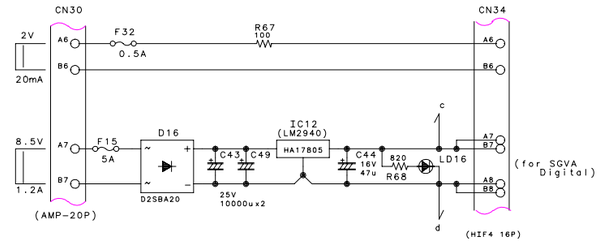

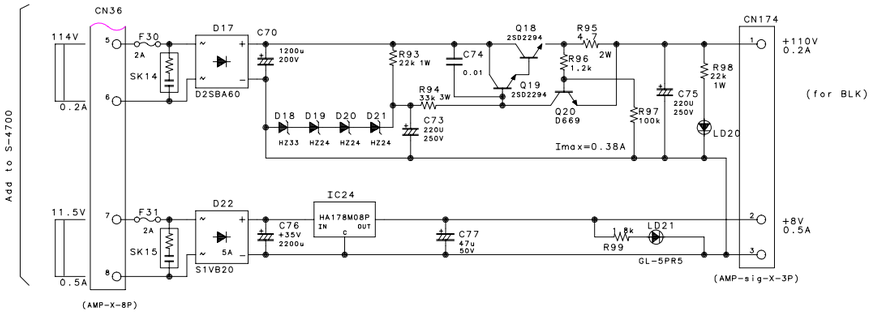

CAD EF099B

記号	来 歴	年月日	訂 正	審 査	承 認
△					
△					
△					

	署 名	年月日
製図	K.KAGEYAMA	1999 -03-26
審査	N.KANEOKA	1999 -03-26
	———	——-——-
承認	S.OOTSUKA	1999 -03-26

投影法 | 尺度 : | 名称 (S-5200) DCPS P.C.B.

株式会社 日立製作所

計測器グループ図番 321 25378386 | 枝番 2/2 | 訂正 | 入庫

14.DCPS P.C.B.(2/2)

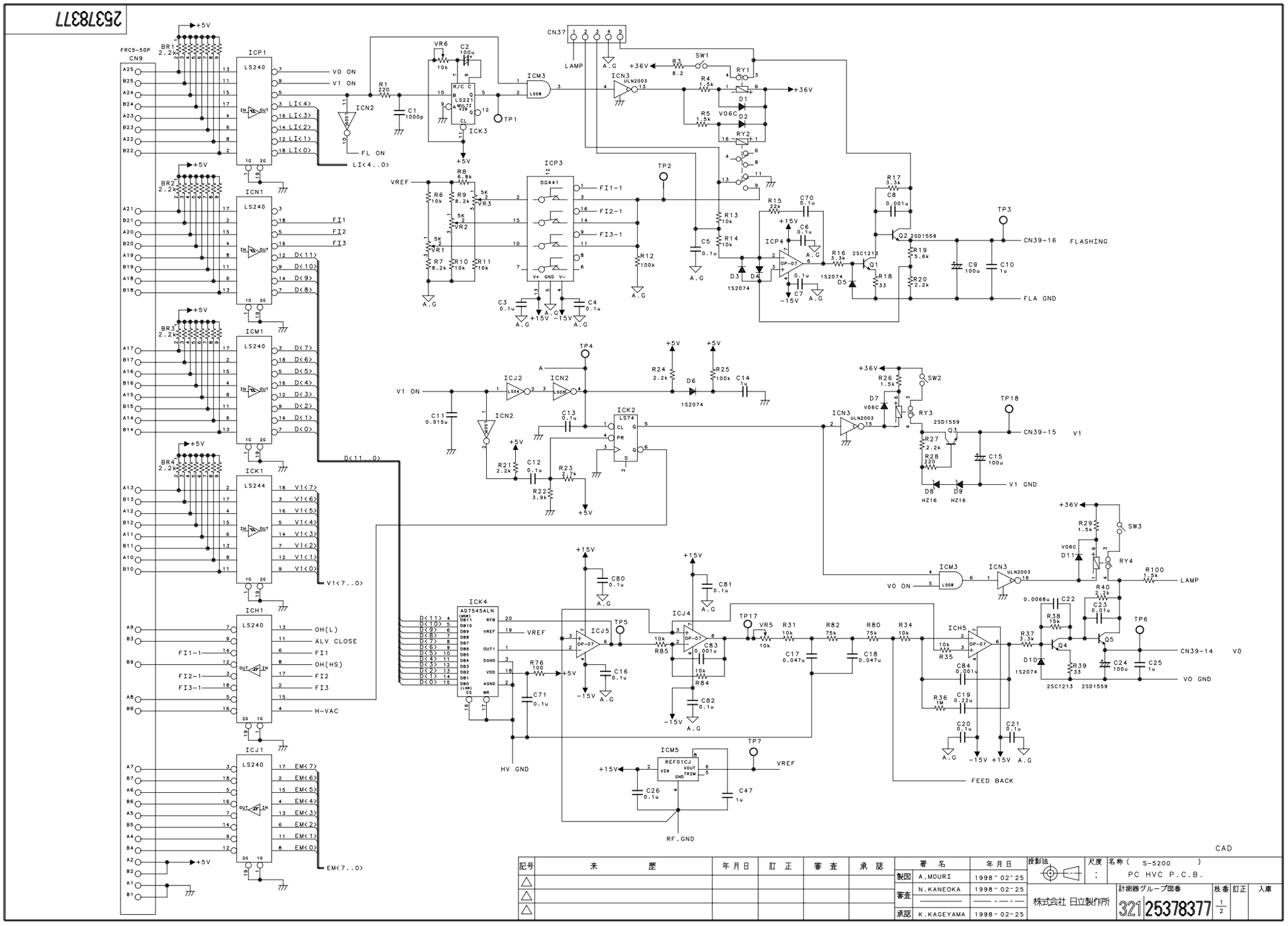

記号	来歴	年月日	訂正	審査	承認
△					
△					
△					

	署名	年月日
製図	A.MOURI	1998-02-25
審査	N.KANEOKA	1998-02-25
承認	K.KAGEYAMA	1998-02-25

投影法 | 尺度 : | 名称 (S-5200) PC HVC P.C.B.

株式会社 日立製作所

計測器グループ図番 321 25378377 | 枝番 1/2 | 訂正 | 入庫

15.PC HVC P.C.B.(1/2)

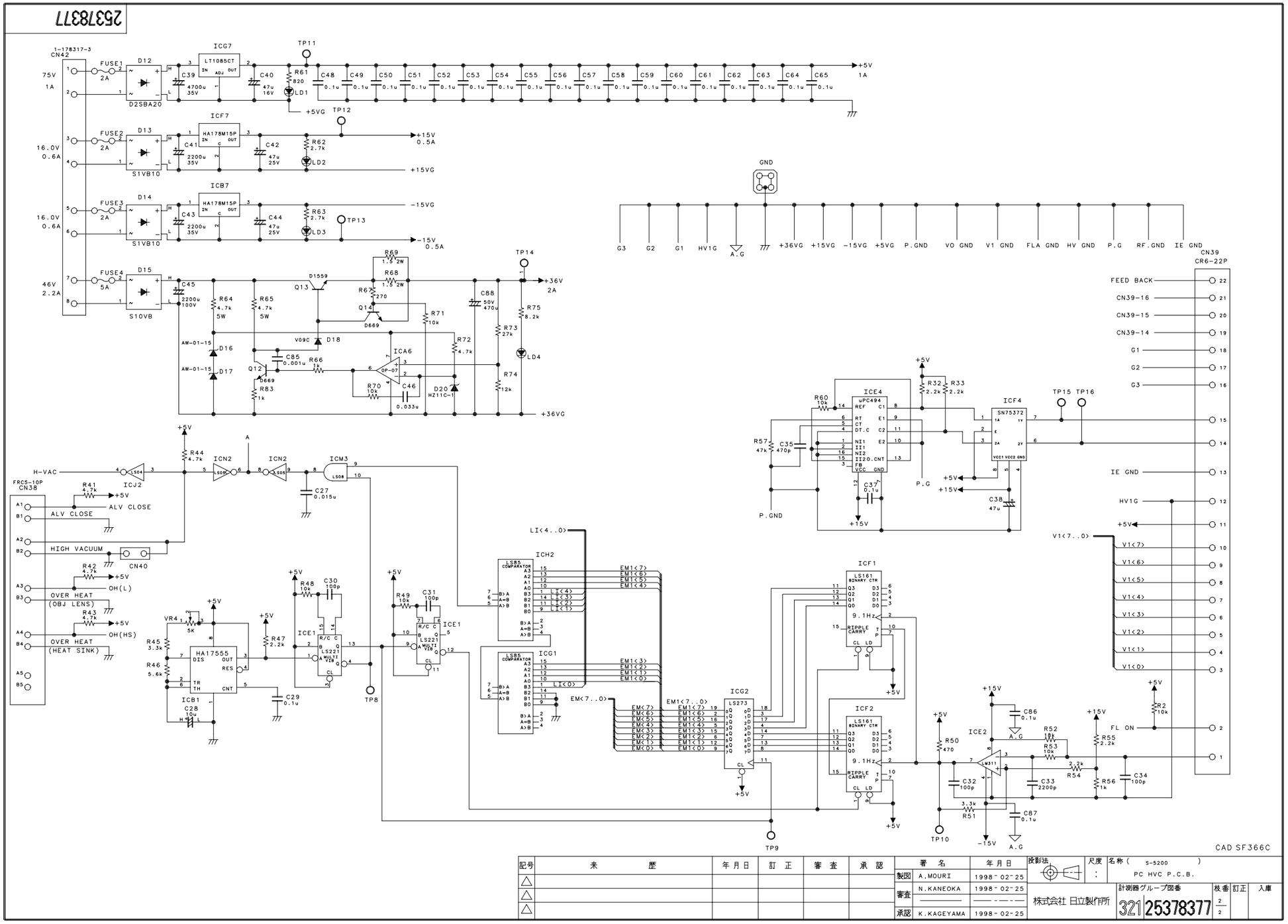

記号	来歴	年月日	訂正	審査	承認		署名	年月日	投影法	尺度	名称 (S-5200)
△						製図	A.MOURI	1998-02-25		:	PC HVC P.C.B.
△						審査	N.KANEOKA	1998-02-25	株式会社 日立製作所	計測器グループ図番	枝番 訂正 入庫
△										321 25378377	2/2
						承認	K.KAGEYAMA	1998-02-25			

15.PC HVC P.C.B.(2/2)

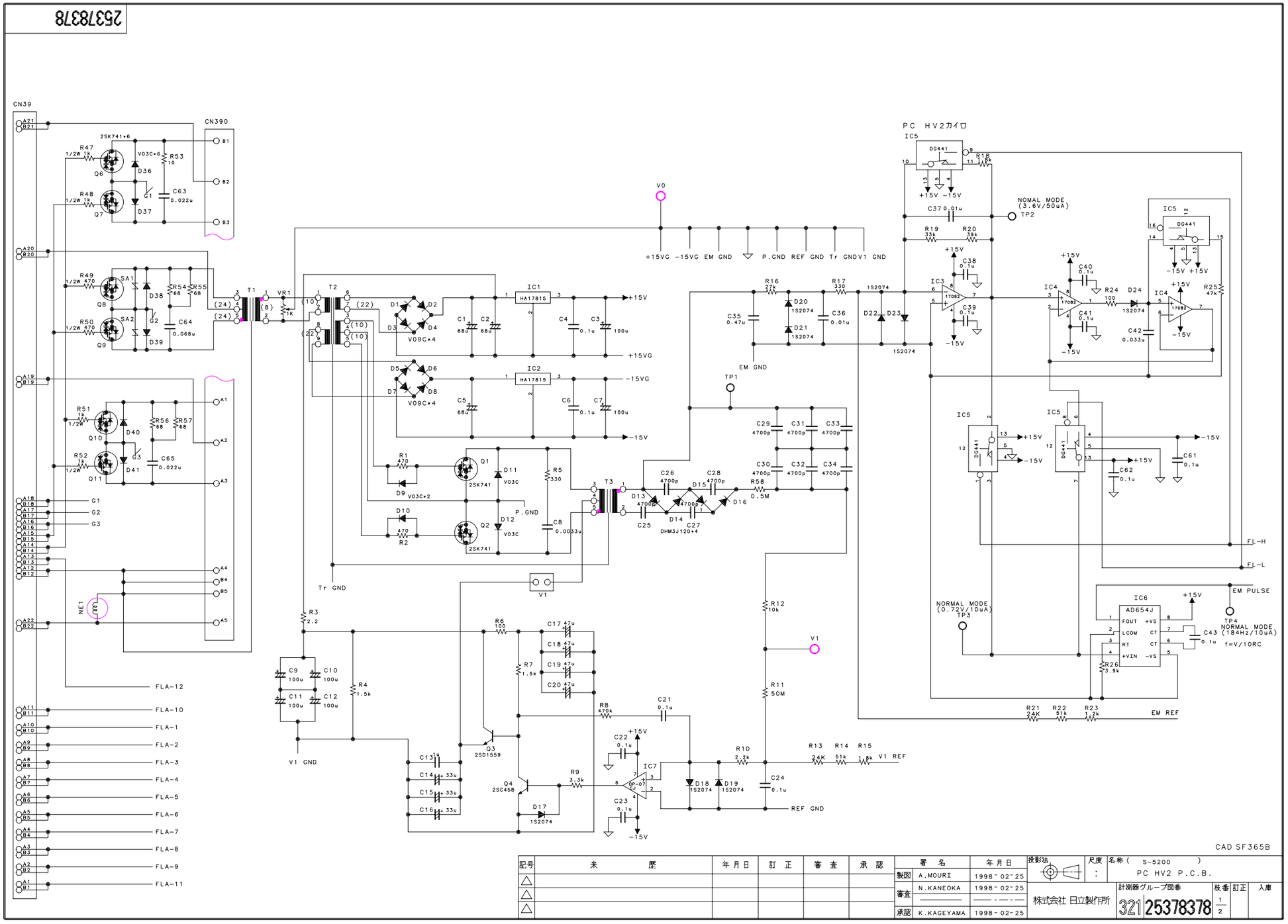
25378378
CN39
CN390
PC HV2カイロ
NOMAL MODE (3.6V/50uA)
TP2
NORMAL MODE (0.72V/10uA)
TP3
TP4 NORMAL MODE (184Hz/10uA)
f=V/10RC
EM PULSE
EM GND
TP1
EM REF
V1 REF
REF GND
V1 GND
Tr GND
P.GND
FLA-12
FLA-10
FLA-1
FLA-2
FLA-3
FLA-4
FLA-5
FLA-6
FLA-7
FLA-8
FLA-9
FLA-11
FL-H
FL-L
CAD SF365B
記号
来 歴
年月日
訂 正
審 査
承 認
署 名
製図 A.MOURI 1998-02-25
審査 N.KANEOKA 1998-02-25
承認 K.KAGEYAMA 1998-02-25
投影法
尺度 :
名称 (S-5200)
PC HV2 P.C.B.
株式会社 日立製作所
計測器グループ図番
321 25378378
枝番 1/2
訂正
入庫
16.PC HV2 P.C.B.(1/2)

25378378

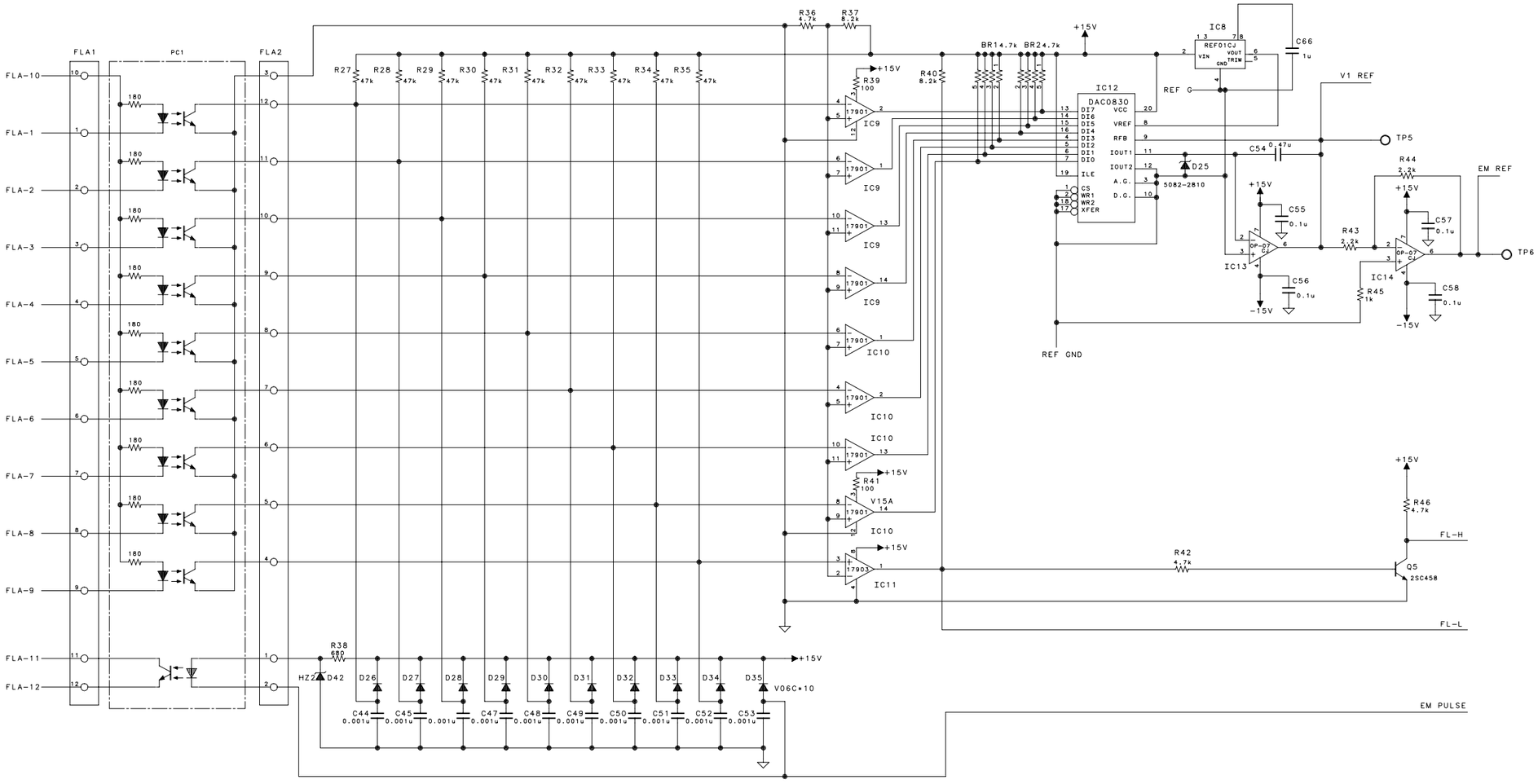

CAD SF365B

記号	来 歴	年月日	訂 正	審 査	承 認
△					
△					
△					

	署 名	年月日
製図	A.MOURI	1998-02-25
審査	N.KANEOKA	1998-02-25
	———	———
承認	K.KAGEYAMA	1998-02-25

投影法 | 尺度 : | 名称 (S-5200) PC HV2 P.C.B.

株式会社 日立製作所

計測器グループ図番 321 25378378 | 枝番 2/2 | 訂正 | 入庫

16.PC HV2 P.C.B.(2/2)

35378379

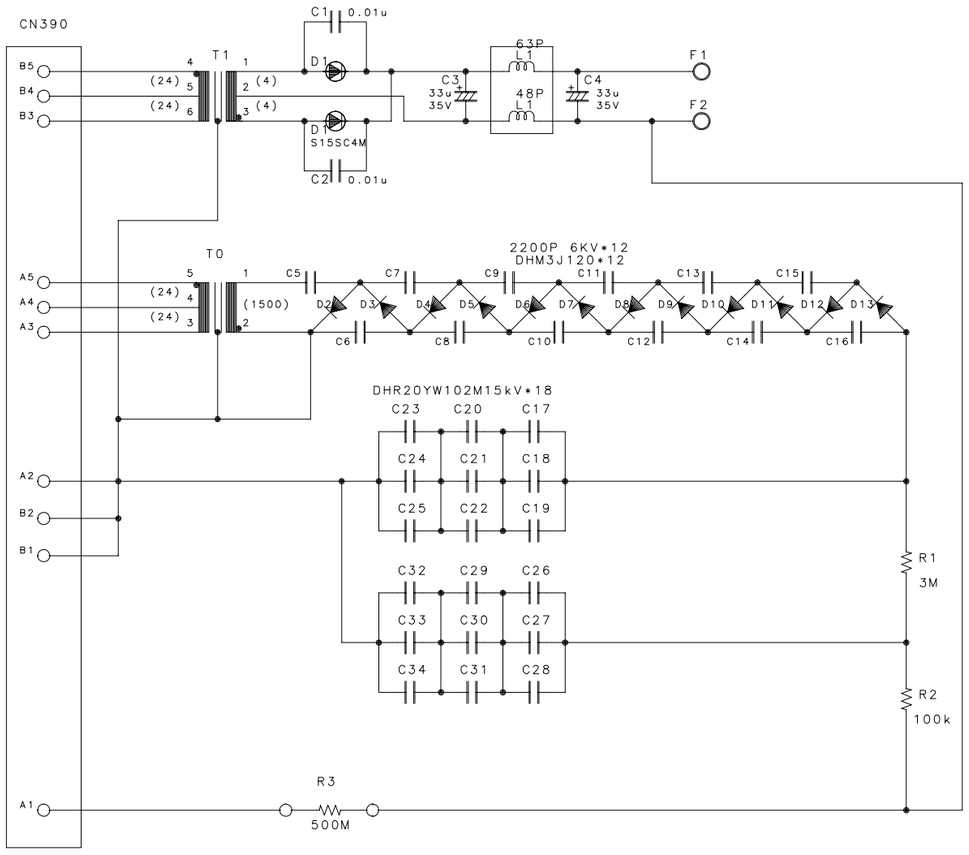

CADSF365B

記号	来　　歴	年月日	訂　正	審　査	承　認
△					
△					
△					

	署　名	年月日
製図	A.MOURI	1998-02-25
審査	N.KANEOKA	1998-02-25
	――――	―― -―― -―
承認	K.KAGEYAMA	1998-02-25

投影法　尺度　：

名称（ S-5200 ）
PC HV1 P.C.B.

株式会社 日立製作所

計測器グループ図番 321 35378379　枝番 1/1　訂正　入庫

17.PC HV1 P.C.B.

KAIRO

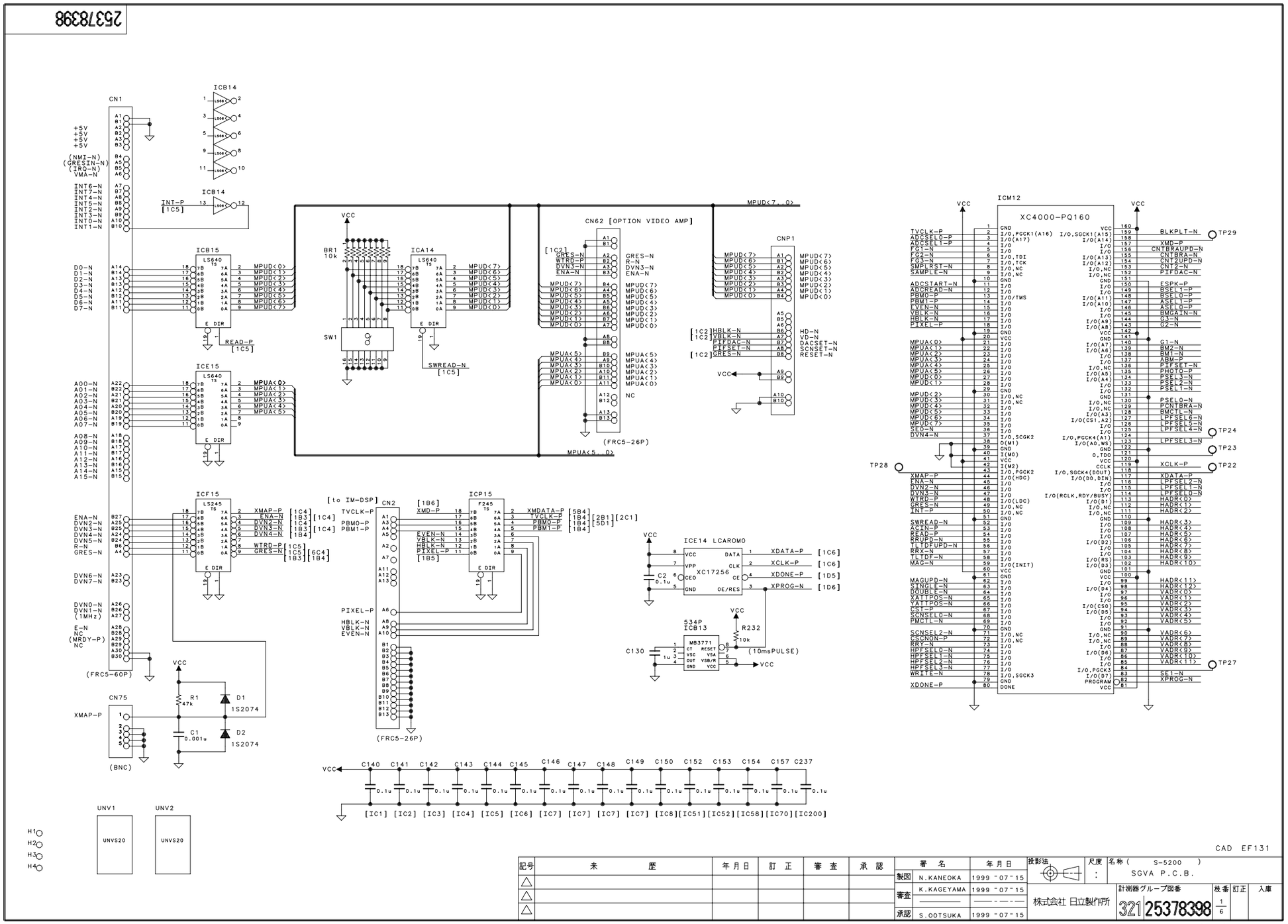

記号	来歴	年月日	訂正	審査	承認
△					
△					
△					

	署名	年月日
製図	N.KANEOKA	1999 -07-15
審査	K.KAGEYAMA	1999 -07-15
承認	S.OOTSUKA	1999 -07-15

投影法 | 尺度 : | 名称 (S-5200) SGVA P.C.B.

株式会社 日立製作所

計測器グループ図番 32125378398 | 枝番 1/6 | 訂正 | 入庫

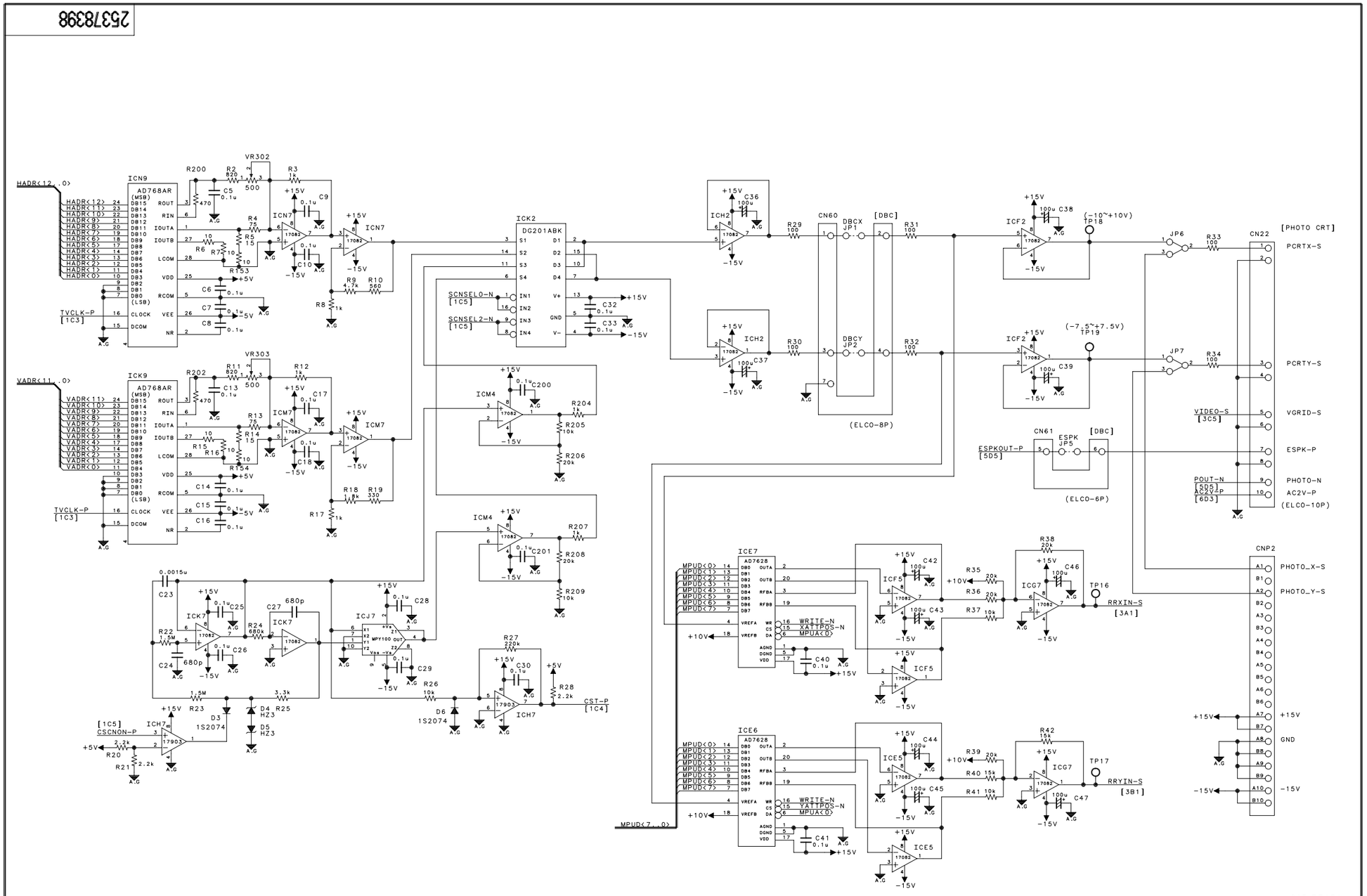

記号	来 歴	年月日	訂 正	審 査	承 認
△					
△					
△					

	署 名	年月日
製図	N.KANEOKA	1999 -07-15
審査	K.KAGEYAMA	1999 -07-15
承認	S.OOTSUKA	1999 -07-15

投影法 | 尺度 : | 名称 (S-5200) SGVA P.C.B.

株式会社 日立製作所

計測器グループ図番 32125378398 | 枝番 2/6 | 訂正 | 入庫

18.SGVA P.C.B.(2/6)

25378398

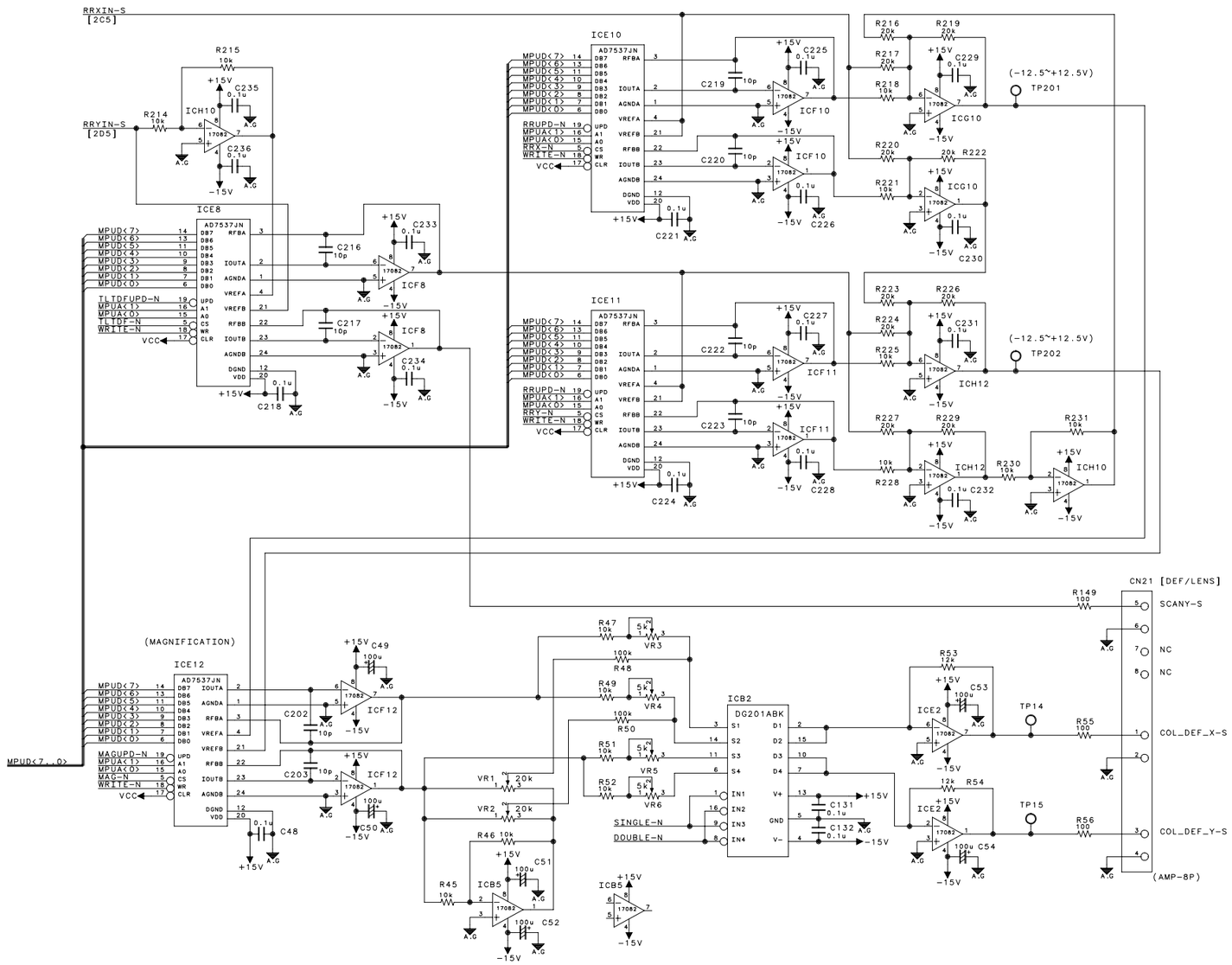

CAD EF131

記号	来 歴	年月日	訂 正	審 査	承 認
△					
△					
△					

	署 名	年月日
製図	N.KANEOKA	1999 -07-15
審査	K.KAGEYAMA	1999 -07-15
	————	————
承認	S.OOTSUKA	1999 -07-15

投影法 | 尺度 : | 名称 (S-5200) SGVA P.C.B.

株式会社 日立製作所

計測器グループ図番 321 25378398 | 枝番 3/6 | 訂正 | 入庫

18.SGVA P.C.B.(3/6)

25378398

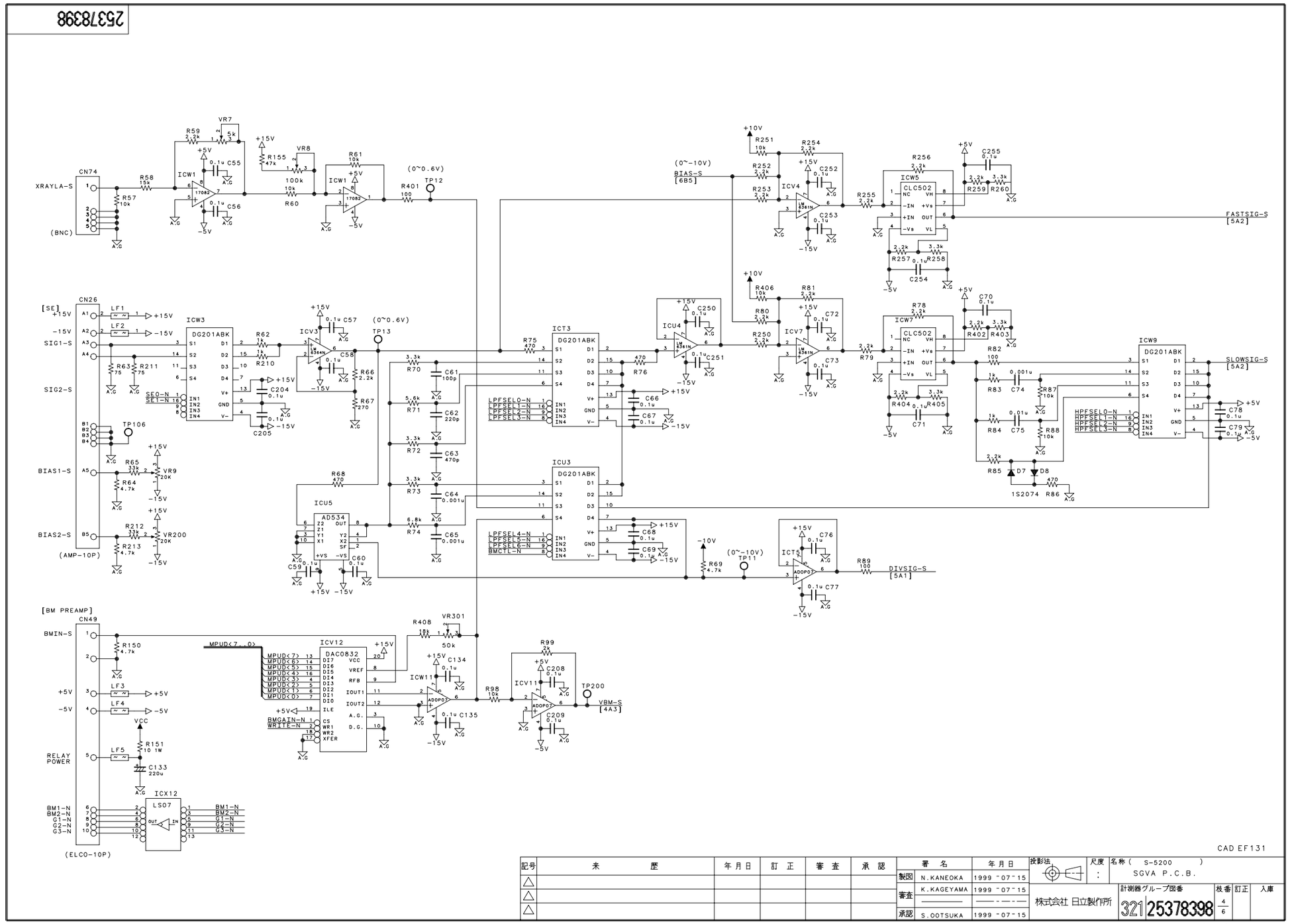

記号	来歴	年月日	訂正	審査	承認
△					
△					
△					

	署名	年月日
製図	N.KANEOKA	1999-07-15
審査	K.KAGEYAMA	1999-07-15
承認	S.OOTSUKA	1999-07-15

投影法 | 尺度 : | 名称 (S-5200) SGVA P.C.B.

株式会社 日立製作所

計測器グループ図番 32125378398 | 枝番 4/6 | 訂正 | 入庫

18.SGVA P.C.B.(4/6)

25378398

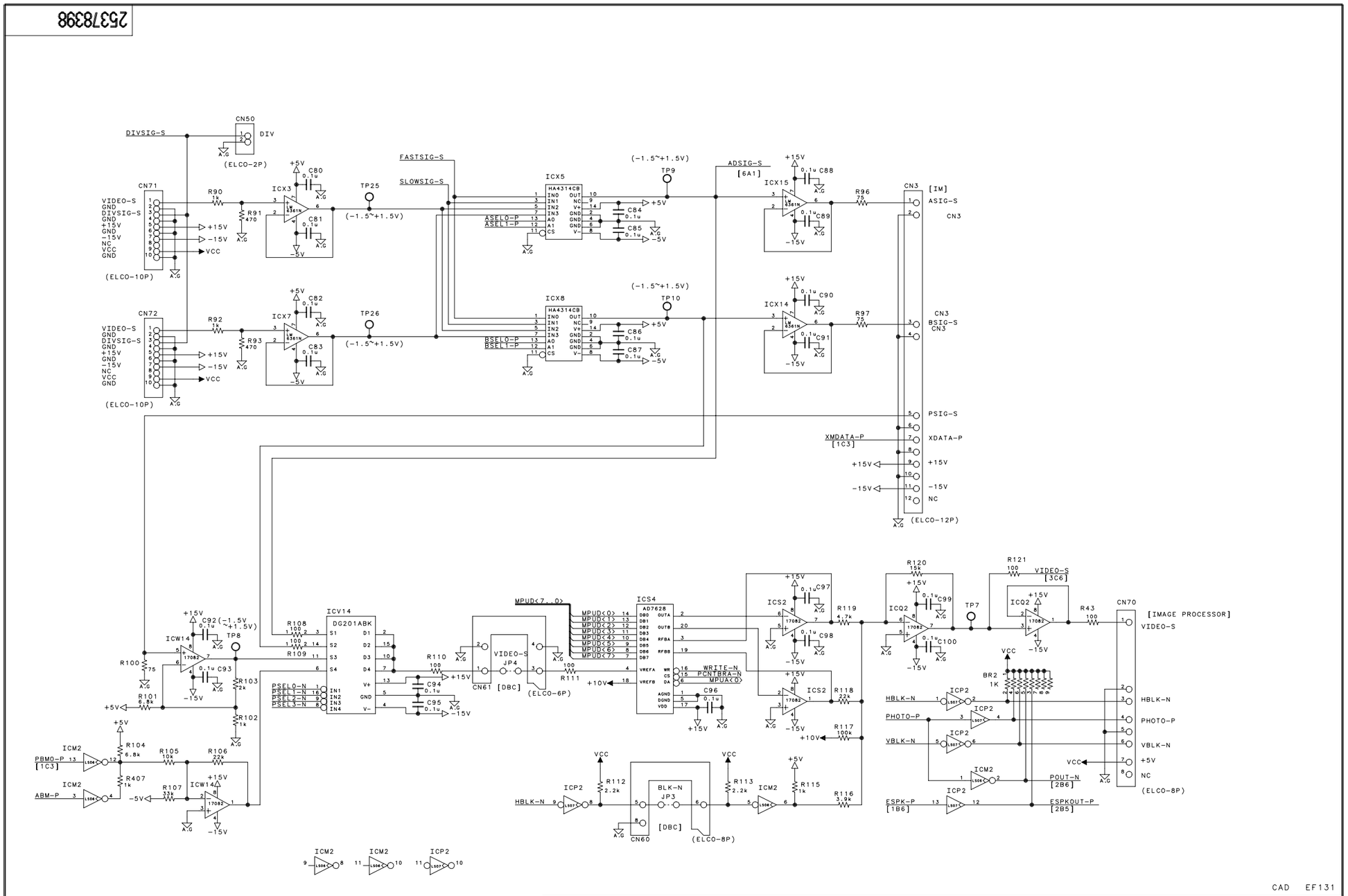

CAD EF131

記号	来歴	年月日	訂正	審査	承認
△					
△					
△					

	署名	年月日
製図	N.KANEOKA	1999 -07-15
審査	K.KAGEYAMA	1999 -07-15
	———	——-—-—
承認	S.OOTSUKA	1999 -07-15

投影法 | 尺度 : | 名称 (S-5200) SGVA P.C.B.

株式会社 日立製作所

計測器グループ図番 321 25378398

枝番 5/6 | 訂正 | 入庫

18.SGVA P.C.B.(5/6)

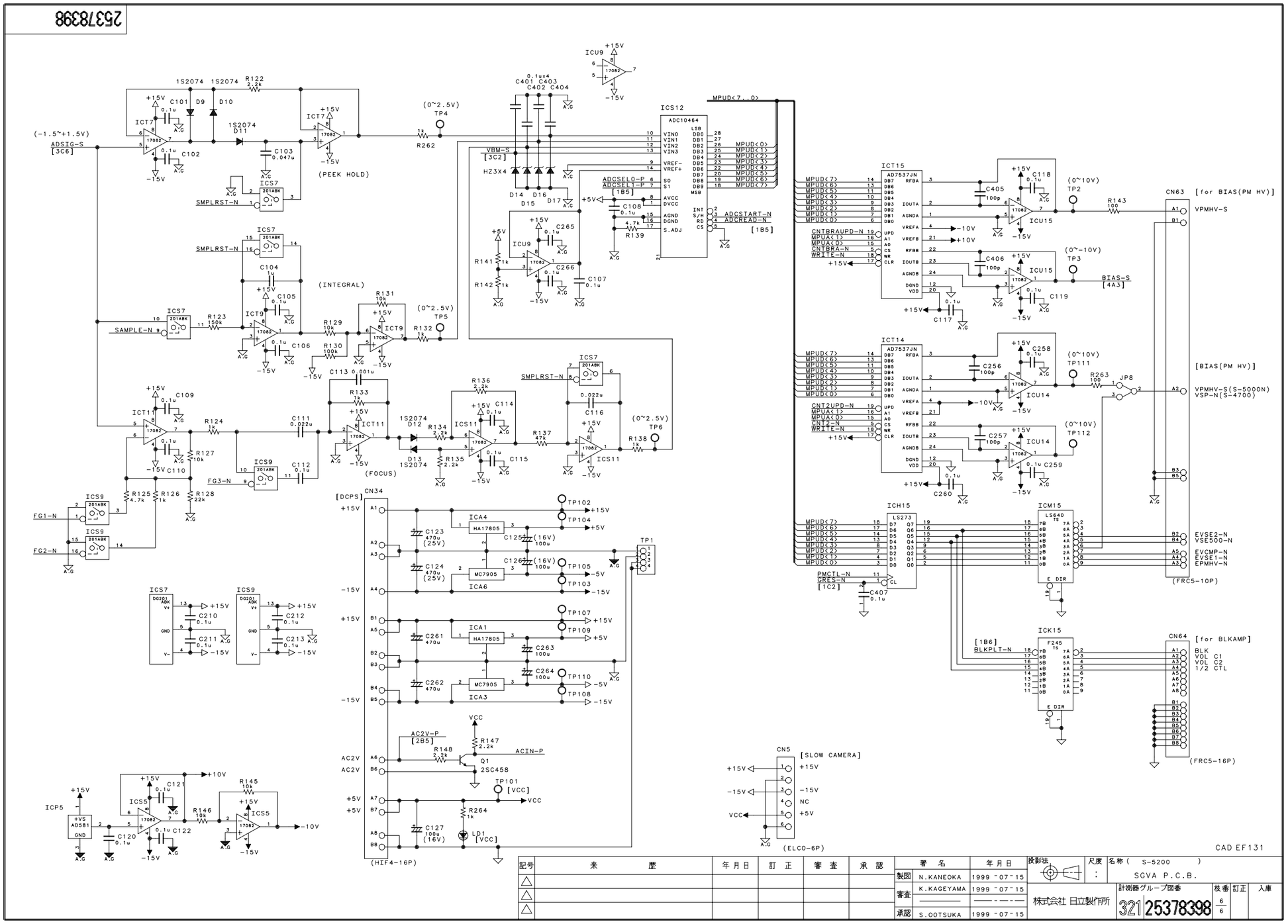

記号	来歴	年月日	訂正	審査	承認
△					
△					
△					

	署名	年月日
製図	N.KANEOKA	1999 -07-15
審査	K.KAGEYAMA	1999 -07-15
承認	S.OOTSUKA	1999 -07-15

投影法 | 尺度 : | 名称(S-5200) SGVA P.C.B.

株式会社 日立製作所

計測器グループ図番 321 25378398 | 枚番 6/6 | 訂正 | 入庫

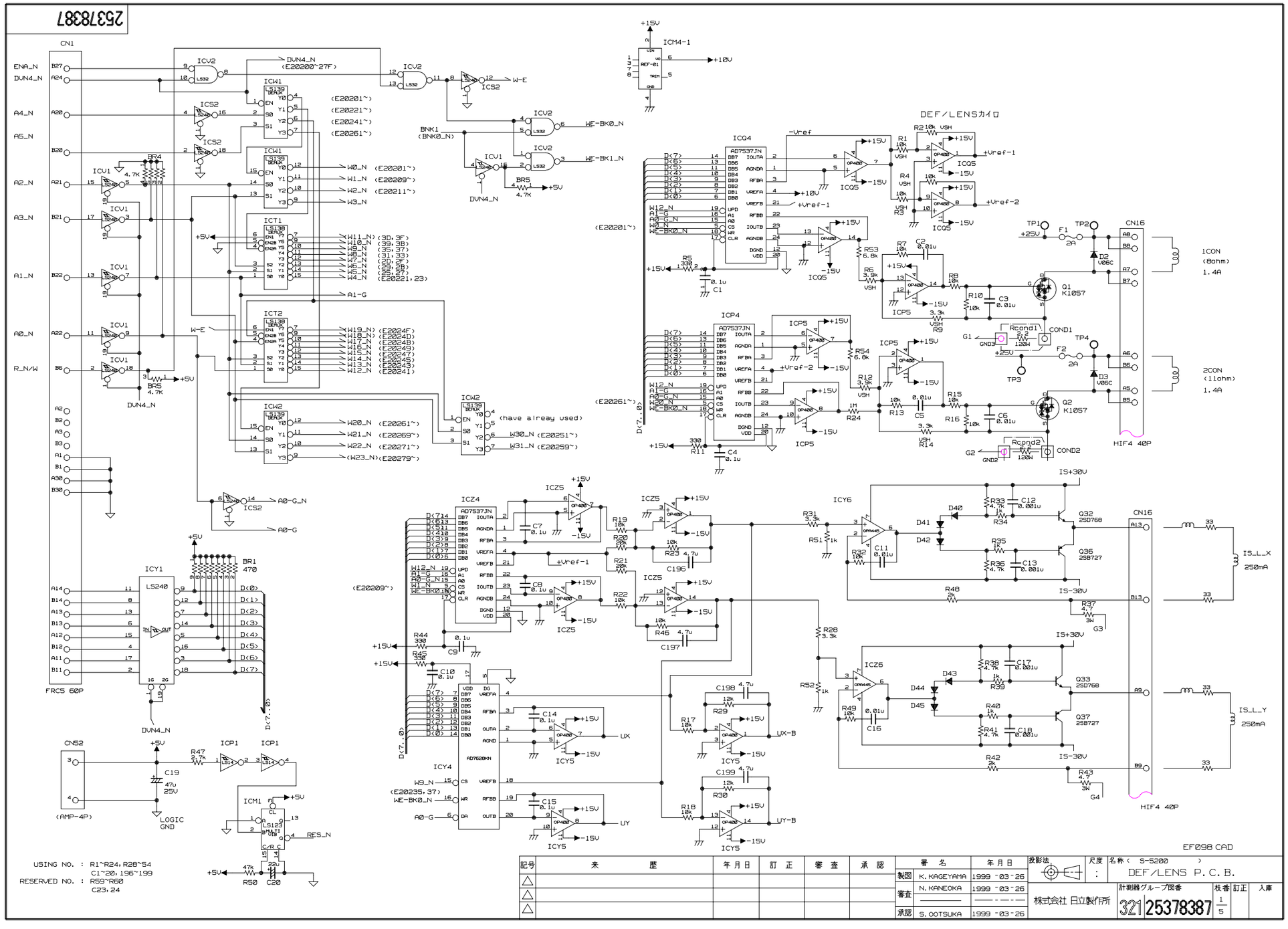

19.DEF/LENS P.C.B.(1/5)

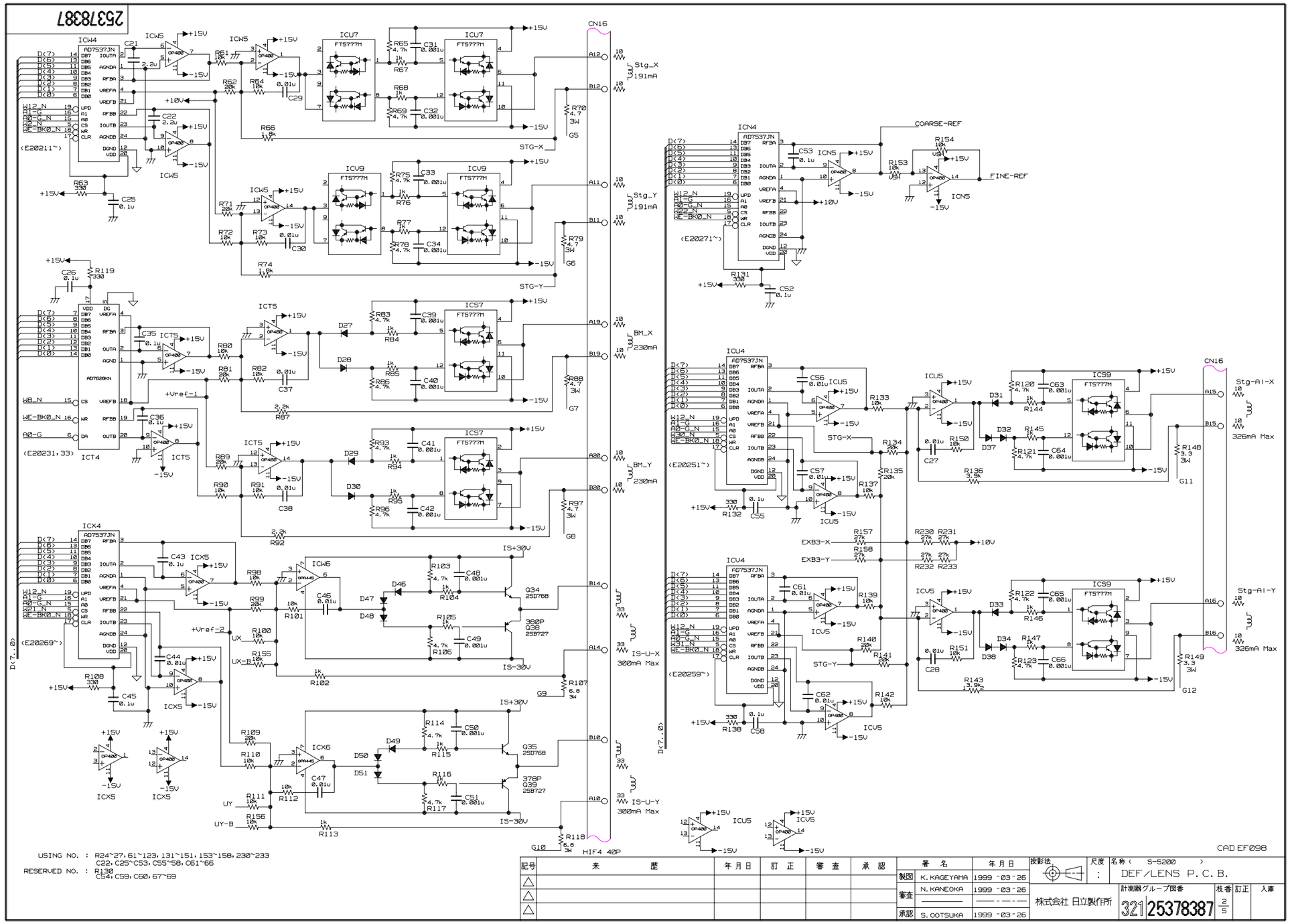

19.DEF/LENS P.C.B.(2/5)

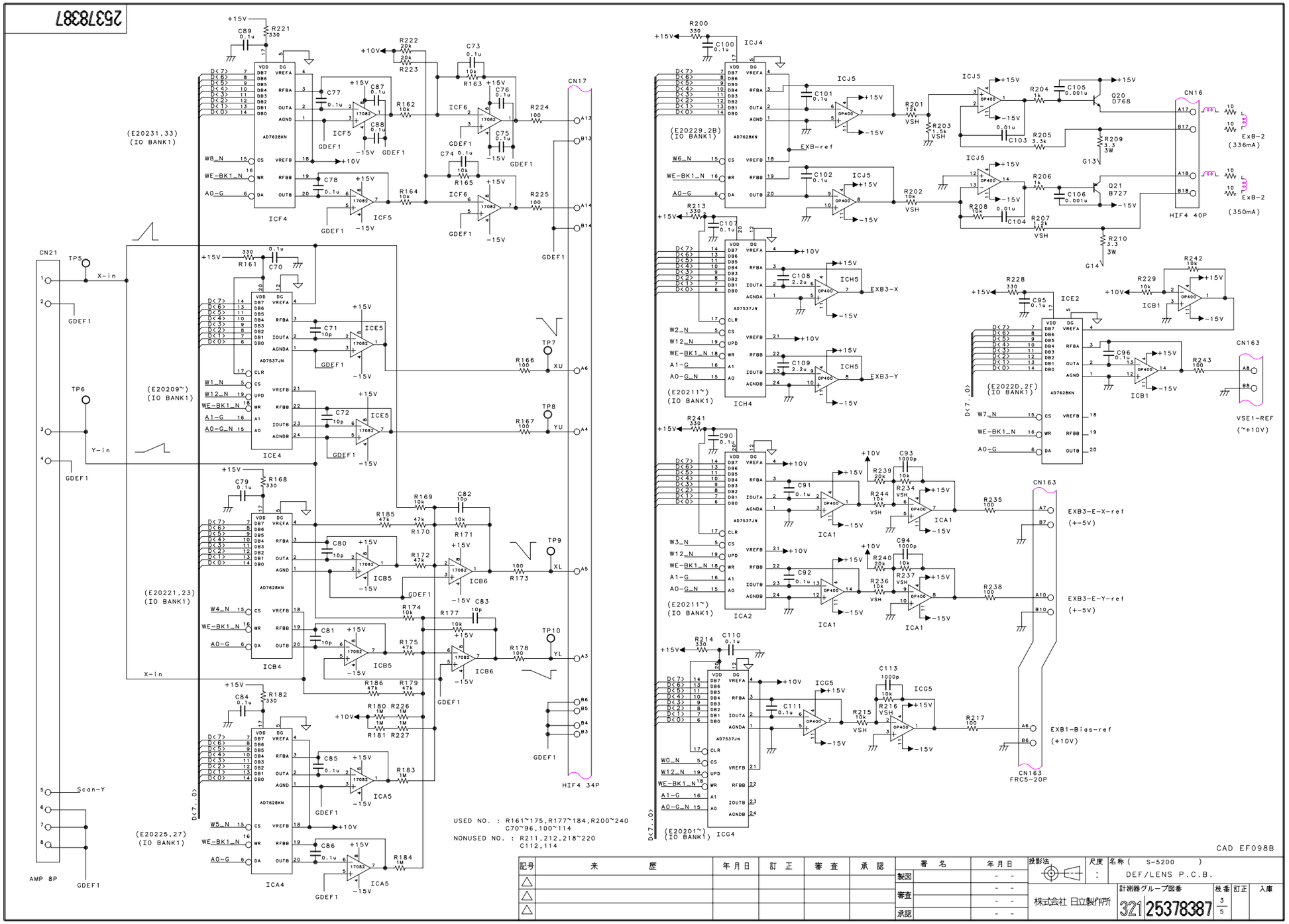
25378387
CN17
HIF4 34P
CN21
AMP 8P
X-in
Y-in
Scan-Y
GDEF1
(E20231,33)
(IO BANK1)
(E20209~)
(IO BANK1)
(E20221,23)
(IO BANK1)
(E20225,27)
(IO BANK1)
ICF4
ICF5
ICF6
ICE4
ICE5
ICB4
ICB5
ICB6
ICA4
ICA5
USED NO. : R161~175,R177~184,R200~240
C70~96,100~114
NONUSED NO. : R211,212,218~220
C112,114
(E20229,2B)
(IO BANK1)
(E20211~)
(IO BANK1)
ICJ4
ICJ5
ICH4
ICH5
ICE2
ICB1
ICA1
ICA2
ICG4
ICG5
CN16
HIF4 40P
ExB-2
(336mA)
(350mA)
CN163
VSE1-REF
(~+10V)
EXB3-E-X-ref
(+-5V)
EXB3-E-Y-ref
(+-5V)
EXB1-Bias-ref
(+10V)
CN163
FRC5-20P
(E2022D,2F)
(IO BANK1)
CAD EF098B
記号
来 歴
年月日
訂 正
審 査
承 認
署 名
製図
審査
承認
投影法
尺度
名称 (S-5200)
DEF/LENS P.C.B.
株式会社 日立製作所
計測器グループ図番
321 25378387
枝番 3/5
訂正
入庫
19.DEF/LENS P.C.B.(3/5)

25378387

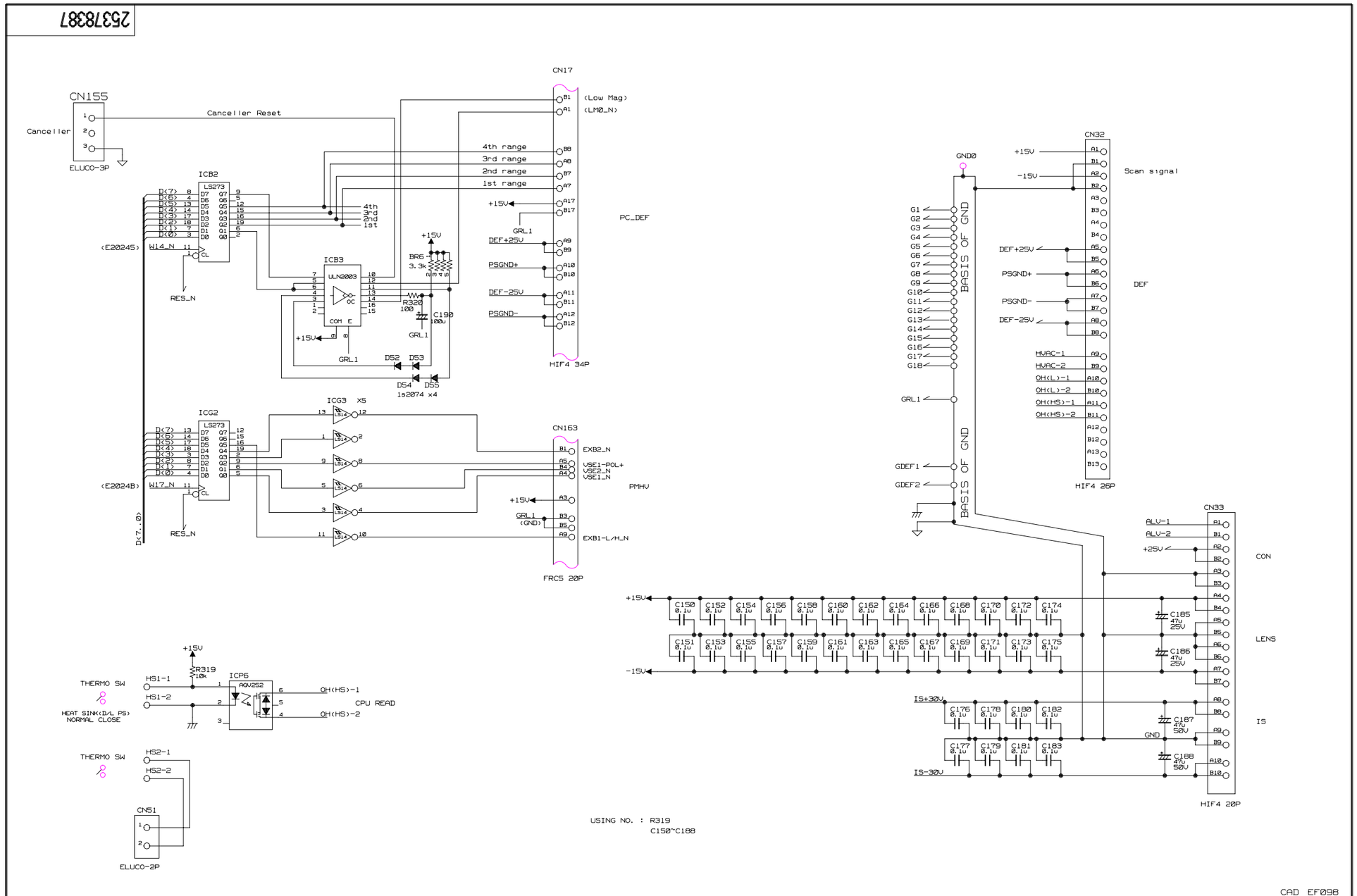

記号	来歴	年月日	訂正	審査	承認
△					
△					
△					

	署名	年月日
製図	K. KAGEYAMA	1999-03-26
審査	N. KANEOKA	1999-03-26
承認	S. OOTSUKA	1999-03-26

投影法 | 尺度 : | 名称 (S-5200) DEF/LENS P.C.B.

株式会社 日立製作所

計測器グループ図番 321 25378387 | 枚番 4/5 | 訂正 | 入庫

19.DEF/LENS P.C.B.(4/5)

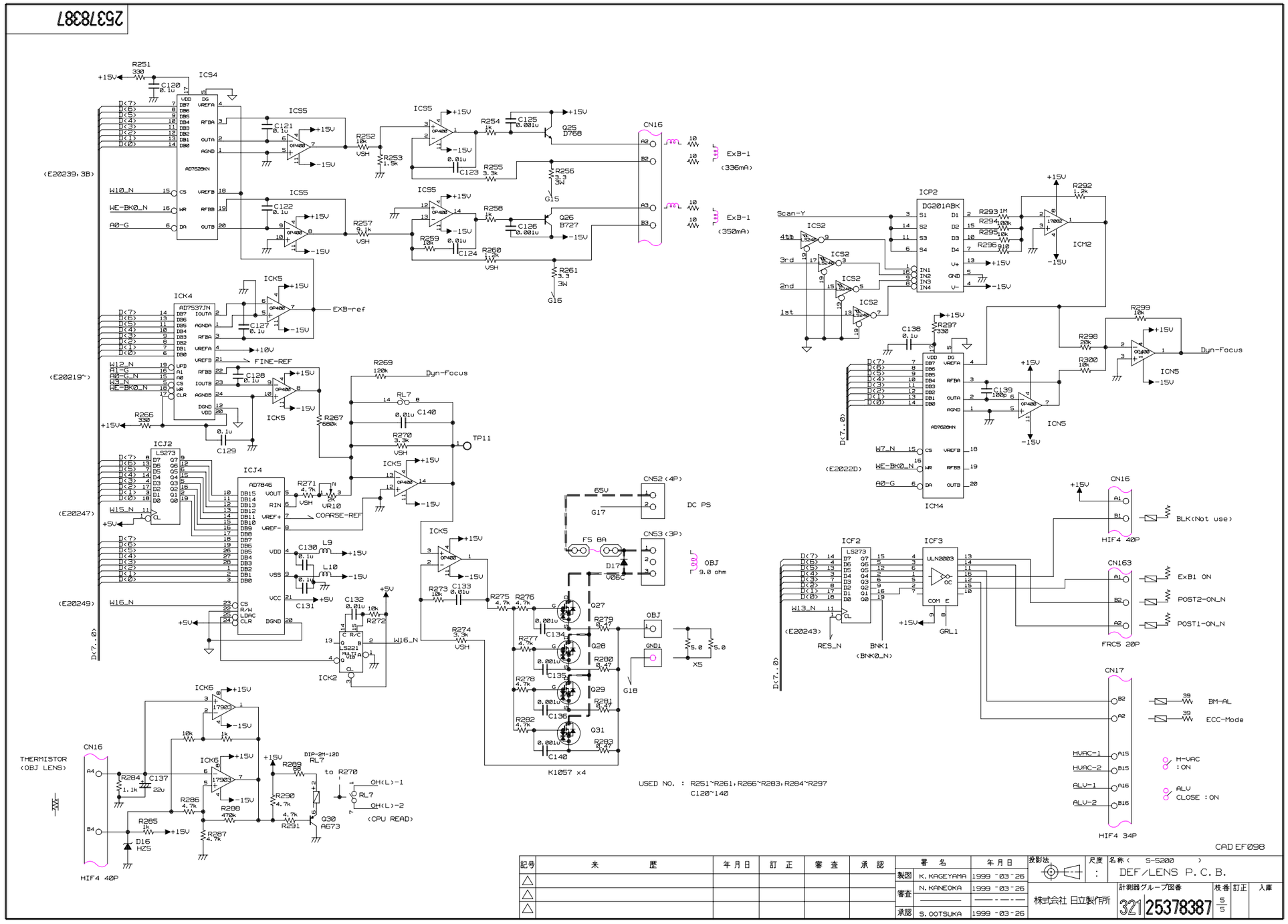
25378387
ICS4
AD7628KN
ICS5
ICK4
AD7537JN
ICK5
ICJ2
LS273
ICJ4
AD7846
ICK2
LS221
ICK6
17903
CN16
THERMISTOR
(OBJ LENS)
HIF4 40P
DIP-2M-12D
RL7
to R270
OH(L)-1
OH(L)-2
(CPU READ)
Q30
A673
D16
HZ5
EXB-ref
FINE-REF
COARSE-REF
Dyn-Focus
TP11
CN52 (4P)
DC PS
CN53 (3P)
OBJ
9.0 ohm
F5 8A
D17
V06C
Q27
Q28
Q29
Q31
K1057 x4
G15
G16
G17
G18
ExB-1
(336mA)
(350mA)
ICP2
DG201ABK
ICS2
ICM2
ICM4
ICN5
ICF2
ICF3
ULN2003
CN16
HIF4 40P
CN163
FRC5 20P
CN17
HIF4 34P
BLK(Not use)
ExB1 ON
POST2-ON_N
POST1-ON_N
BM-AL
ECC-Mode
H-VAC
:ON
ALV
CLOSE :ON
USED NO. : R251~R261,R266~R283,R284~R297
C120~140
CAD EF098
DEF/LENS P.C.B.
株式会社 日立製作所
321 25378387
19.DEF/LENS P.C.B.(5/5)

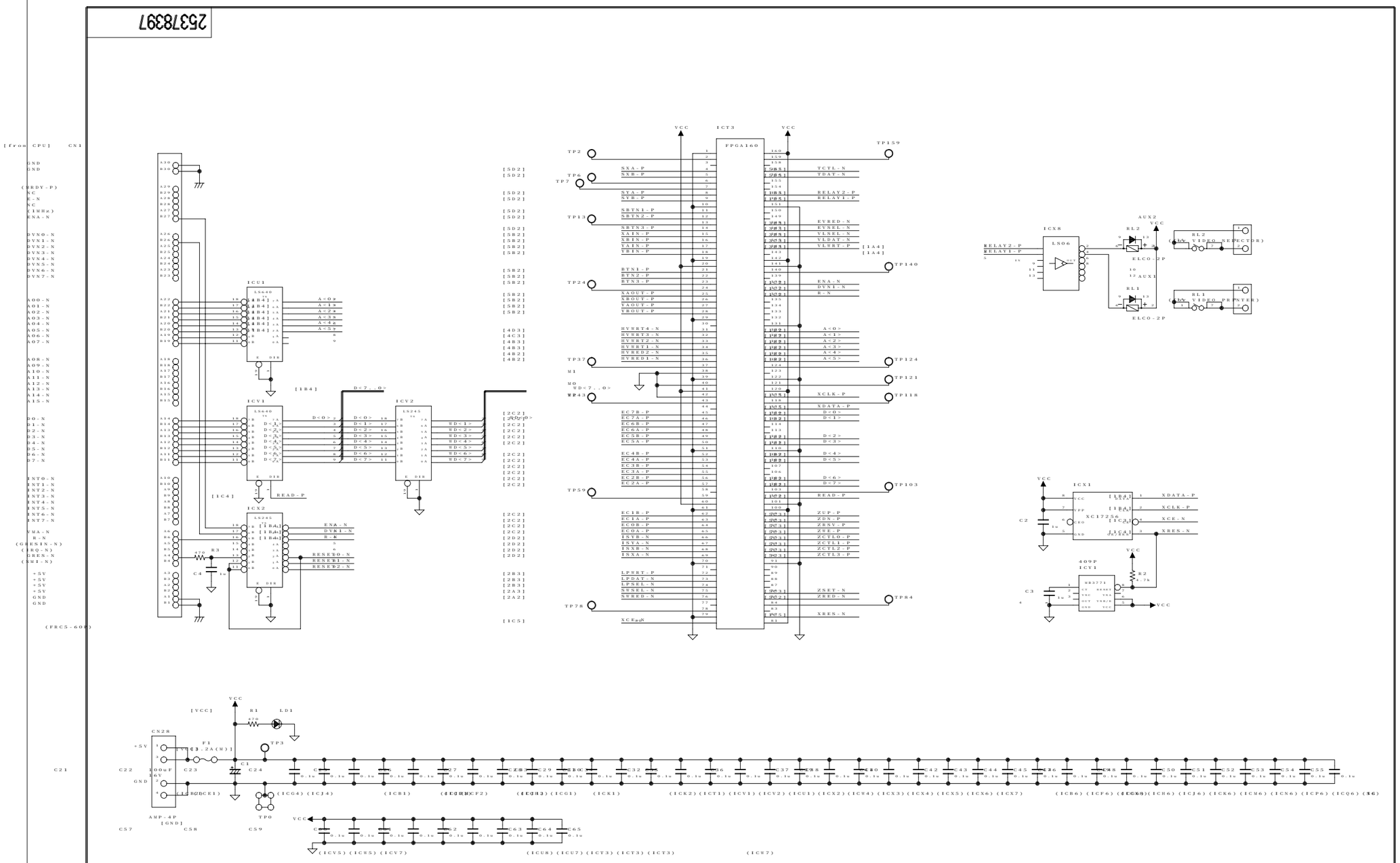

記号	来 歴	年月日	訂 正	審 査	承 認
△					
△					
△					

	署 名	年月日
製図	N.KANEOKA	1999 "04"16
審査	K.KAGEYAMA	1999 "04"16
承認	S.OOTSUKA	1999 "04"16

投影法 | 尺度 : | 名称 (S-5200) IO-CTL P.C.B.

株式会社 日立製作所

計測器グループ図番 32125378397 | 枝番 1/5 | 訂正 | 入庫

20.IO-CTL P.C.B.(1/5)

25378397

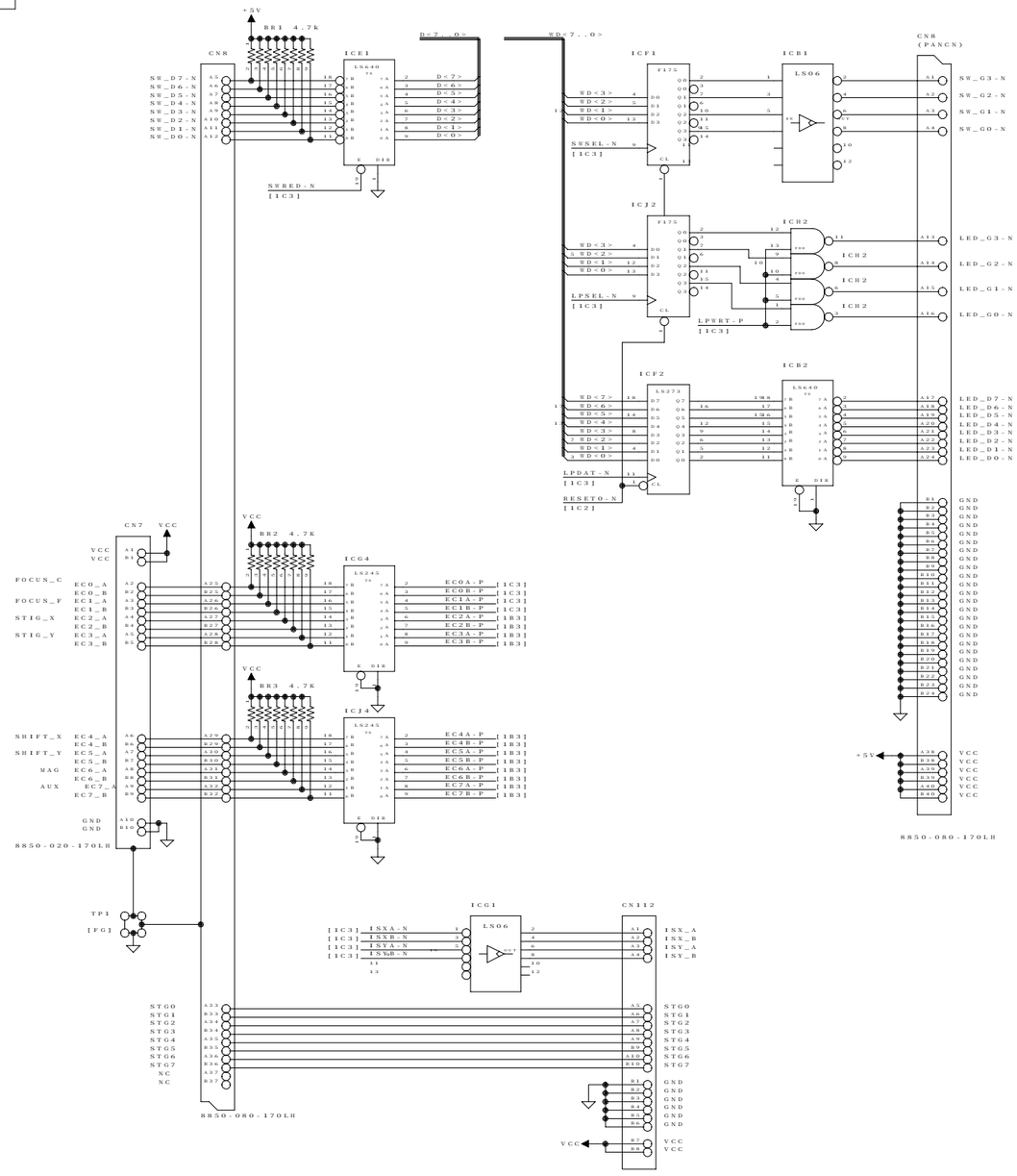

CAD EF125A

記号	来歴	年月日	訂正	審査	承認
△					
△					
△					

	署名	年月日
製図	N.KANEOKA	1999 "04"16
審査	K.KAGEYAMA	1999 " 0316
	———	——— - — - —
承認	S.OOTSUKA	1999 "04"16

投影法 | 尺度 : | 名称 (S-5200) IO-CTL P.C.B.

株式会社 日立製作所

計測器グループ図番 321 25378397 | 枝番 2/5 | 訂正 | 入庫

20.IO-CTL P.C.B.(2/5)

25378397

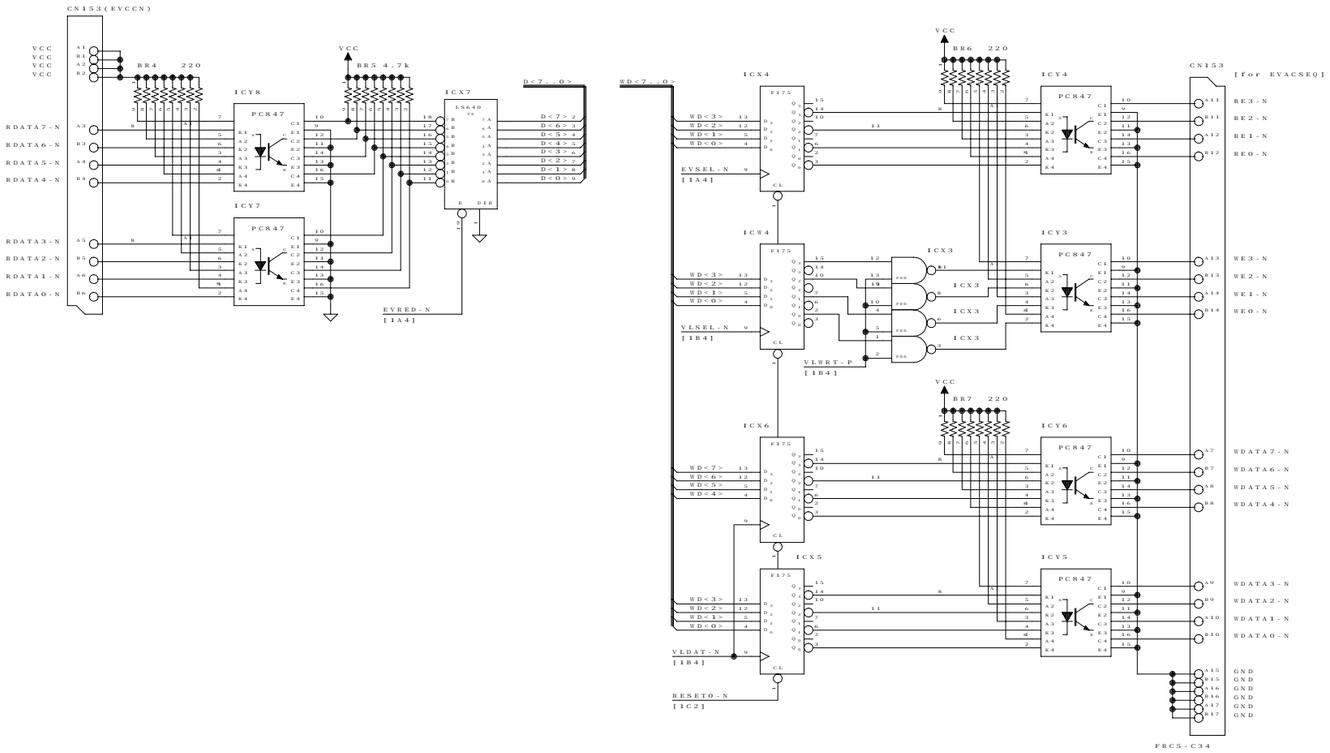

CAD EF125A

記号	来 歴	年月日	訂 正	審 査	承 認
△					
△					
△					

	署 名	年月日
製図	N.KANEOKA	1999 "04"16
審査	K.KAGEYAMA	1999 " 0316
	———	——-———
承認	S.OOTSUKA	1999 " 0316

投影法 尺度 : 名称(S-5200)

IO-CTL P.C.B.

株式会社 日立製作所

計測器グループ図番 321 25378397 枝番 3/5 訂正 入庫

20.IO-CTL P.C.B.(3/5)

25378397

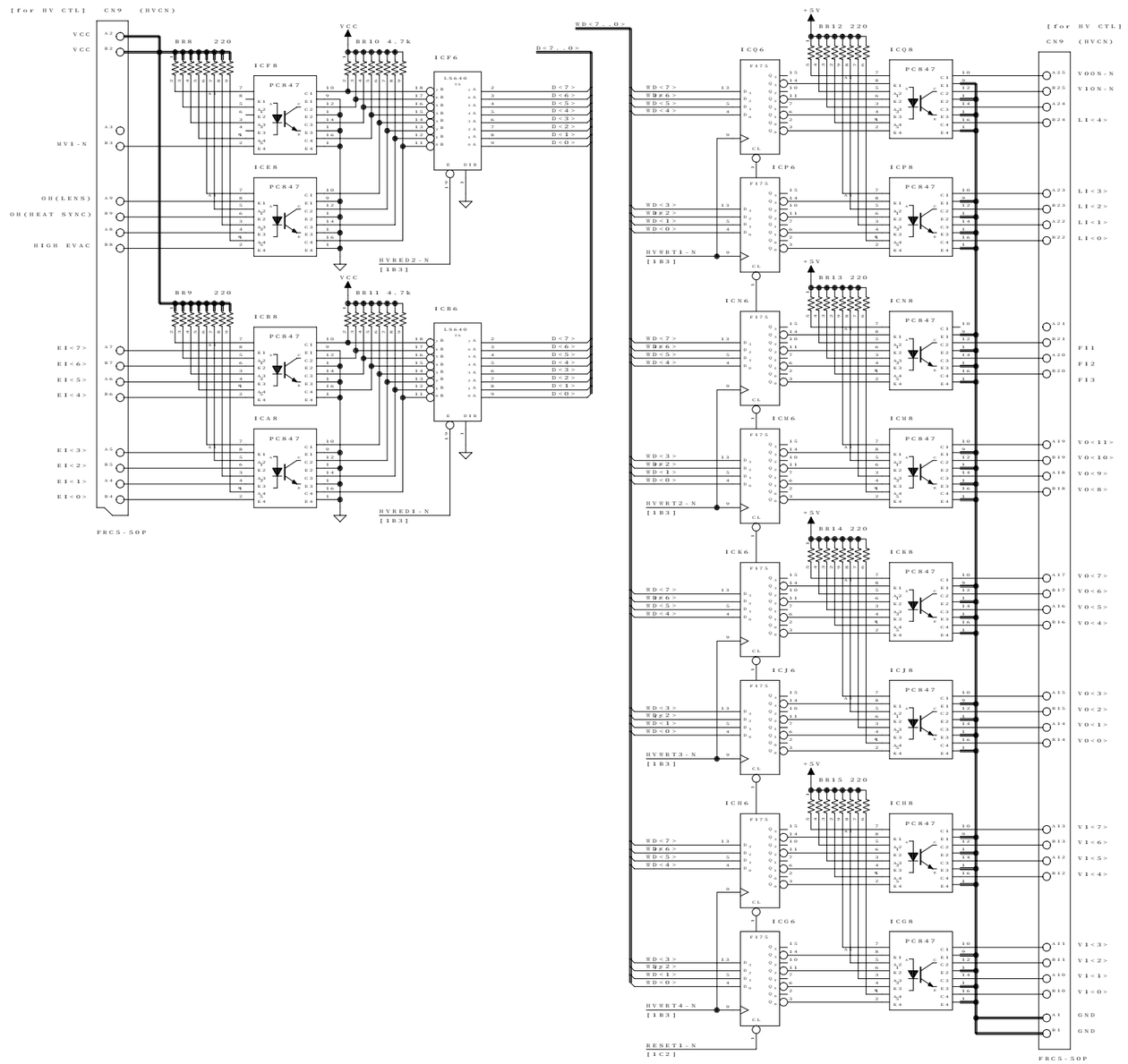

CAD EF125A

記号	来歴	年月日	訂正	審査	承認
△					
△					
△					

	署名	年月日
製図	N.KANEOKA	1999 "04"16
審査	K.KAGEYAMA	1999 "04"16
	———	——-—-—
承認	S.OOTSUKA	1999 "04"16

投影法 | 尺度 : | 名称 (S-5200) IO-CTL P.C.B.

株式会社 日立製作所

計測器グループ図番 321 25378397 | 枝番 4/5 | 訂正 | 入庫

20.IO-CTL P.C.B.(4/5)

25378397

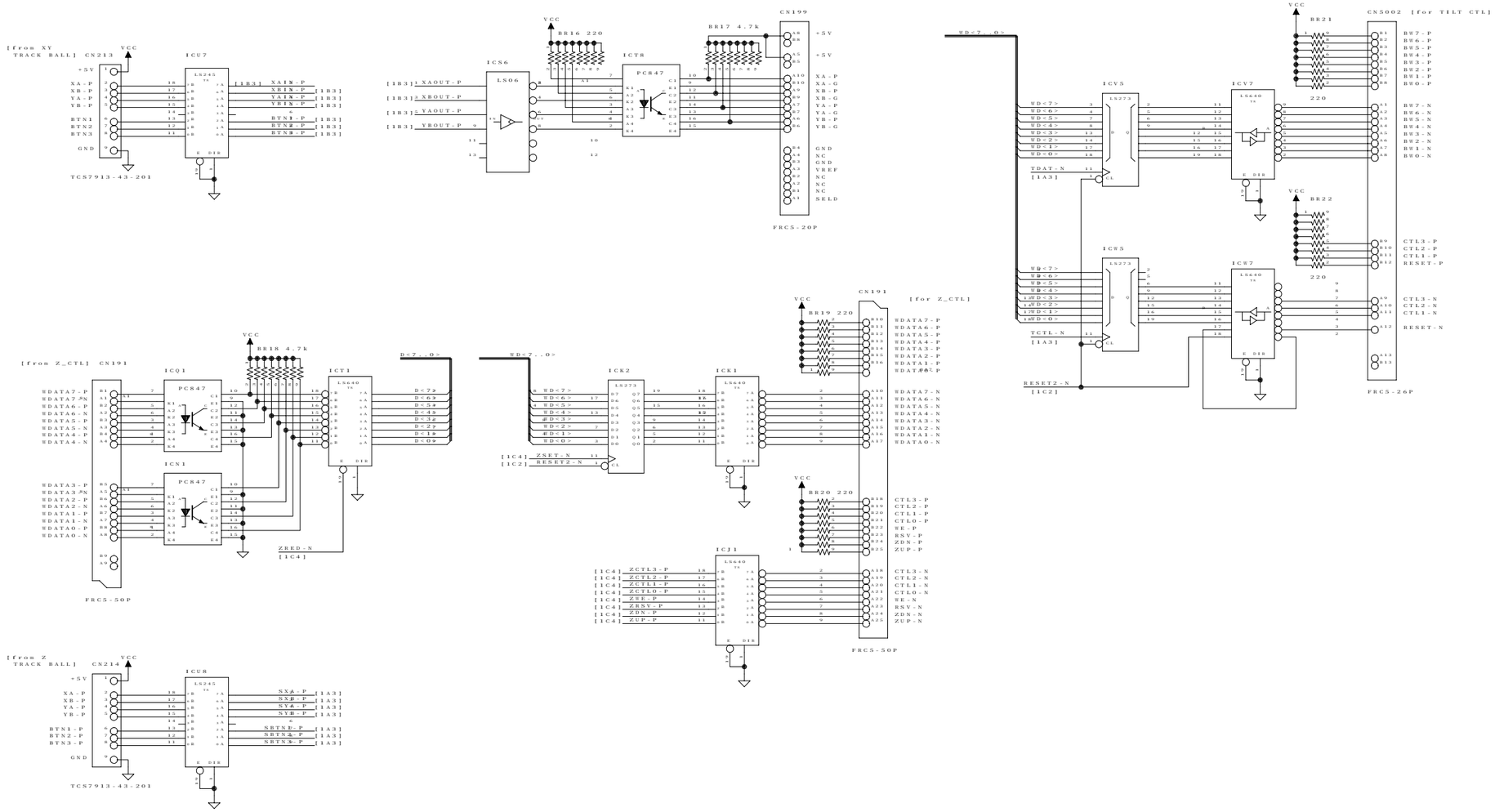

CAD EF125A

記号	来 歴	年月日	訂 正	審 査	承 認
△					
△					
△					

	署 名	年月日
製図	N.KANEOKA	1999 -04-16
審査	K.KAGEYAMA	1999 - 05-16
	————	————
承認	S.OOTSUKA	1999 - 05-16

投影法 | 尺度 : | 名称 (S-5200) IO-CTL P.C.B.

株式会社 日立製作所

計測器グループ図番 321 25378397 | 枝番 5/5 | 訂正 | 入庫

20.IO-CTL P.C.B.(5/5)

35378362

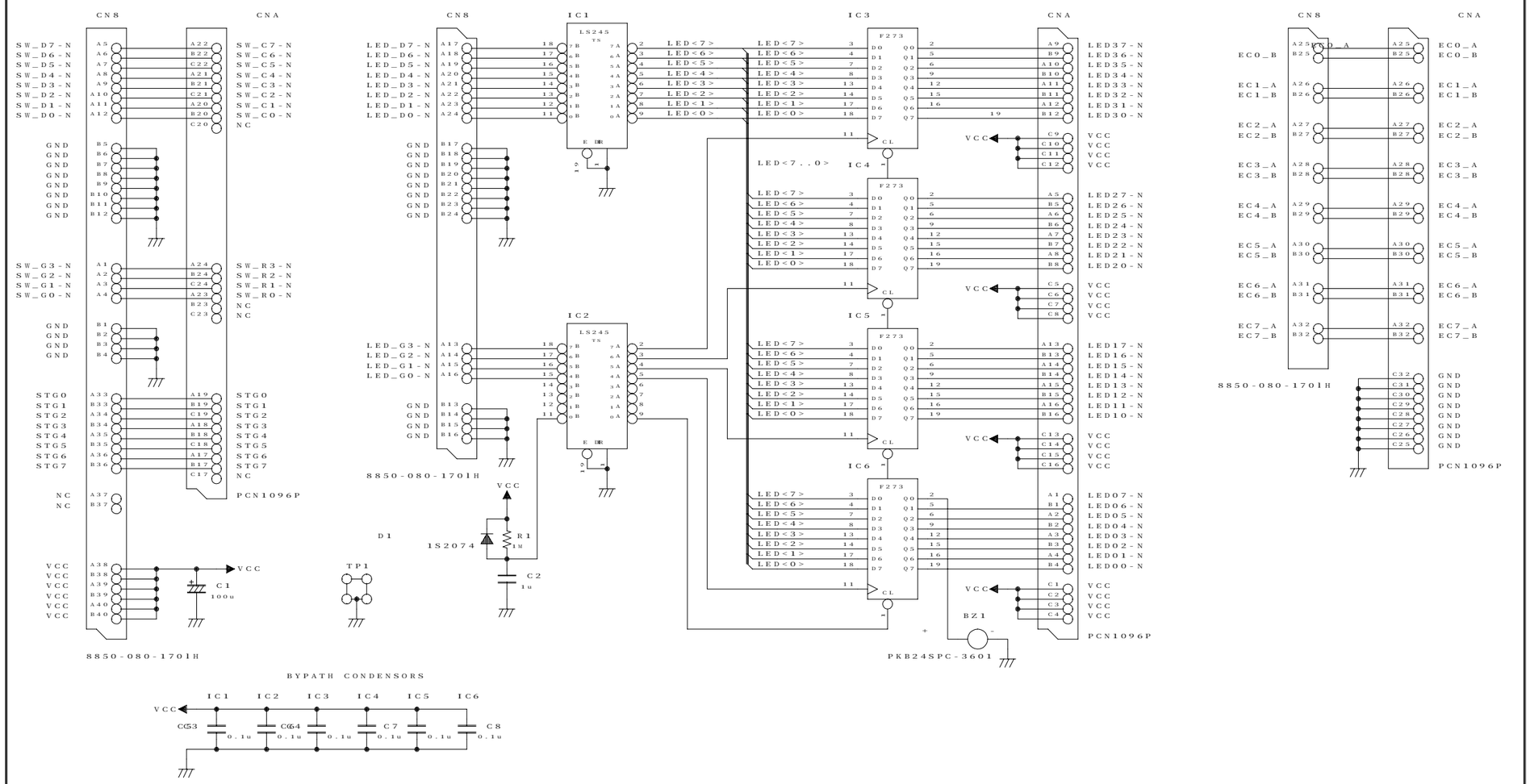

記号	来　　歴	年月日	訂　正	審　査	承　認
△					
△					
△					

	署　名	年月日
製図	N.KANEYAMA	1997-09-25
審査	K.KAGEYAMA	1997-09-25
承認	S.OOTSUKA	1997-09-25

投影法　尺度　：

名称（　S-5200　）

PCPANEL1 P.C.B.

株式会社 日立製作所

計測器グループ図番 321 35378362　枝番 1/1　訂正　入庫

21.PCPANEL1 P.C.B.

KAIRO

35378363

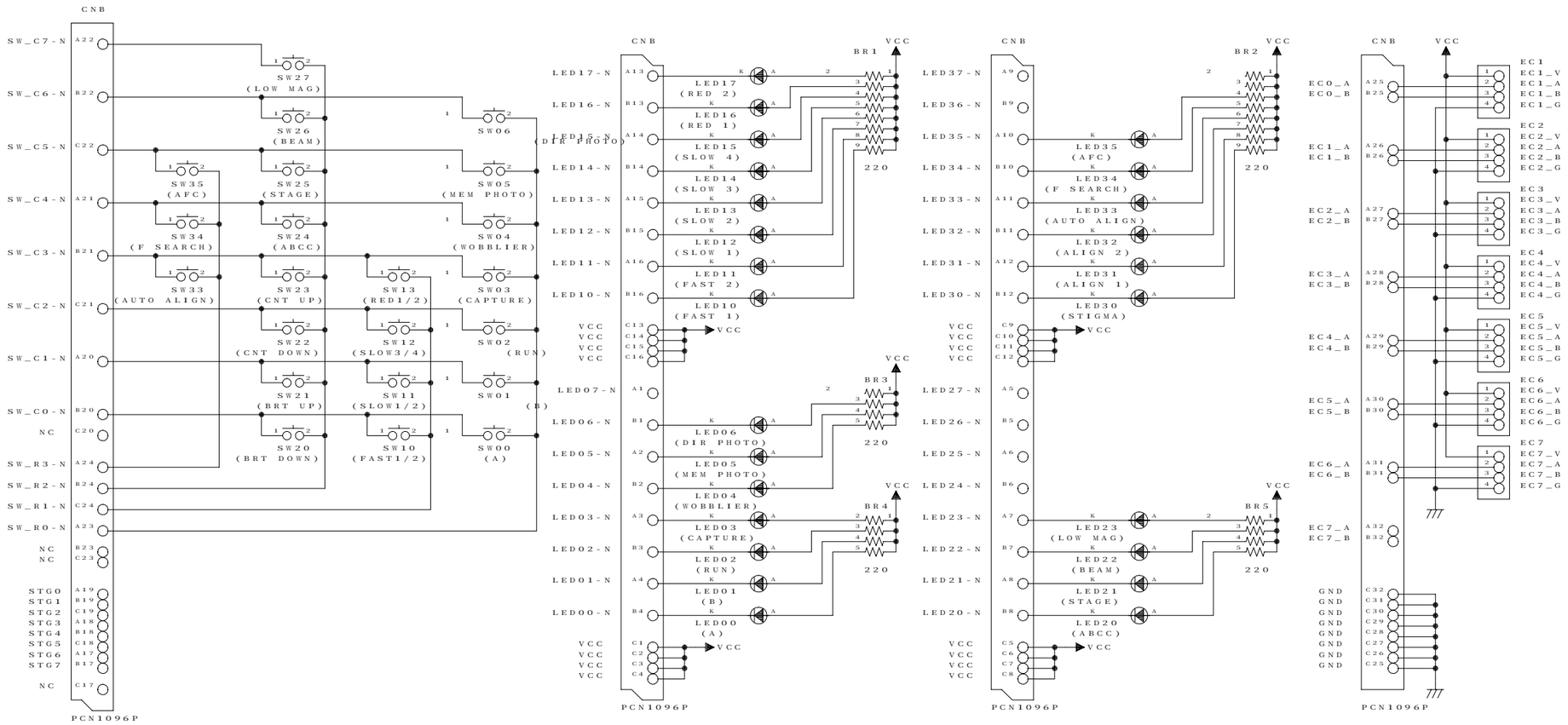

CAD SF326B

記号	来歴	年月日	訂正	審査	承認
△					
△					
△					

	署名	年月日
製図	N.KANEOKA	1997 - 09-25
審査	K.KAGEYAMA	1997 -09-25
承認	S.OOTSUKA	1997 -09-25

投影法 | 尺度 : | 名称 (S-5200) PCPANEL2 P.C.B.

株式会社 日立製作所

計測器グループ図番 321 35378363 | 枝番 1/1 | 訂正 | 入庫

22.PCPANEL2 P.C.B.

KAIRO

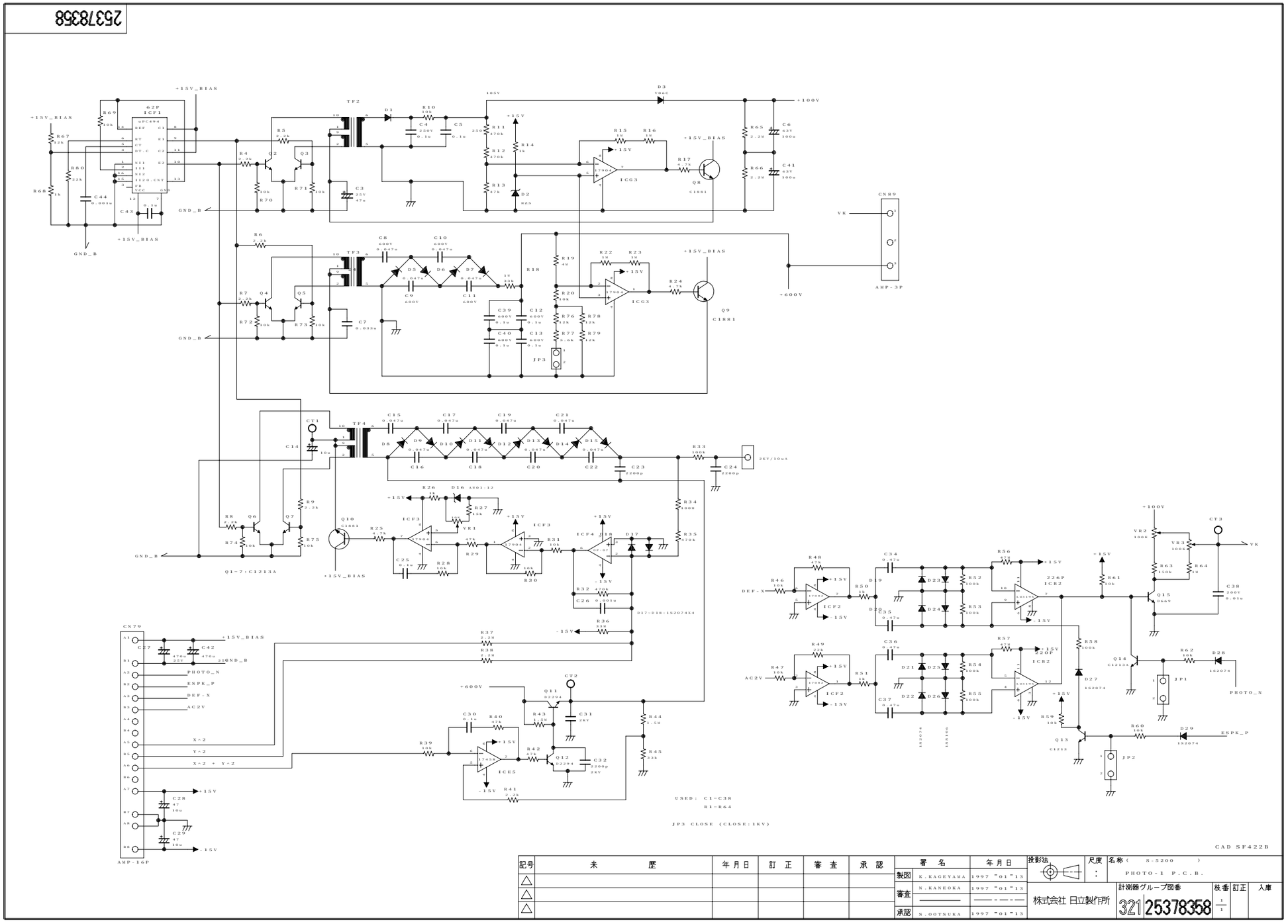
25378358
+15V_BIAS
GND_B
+100V
+600V
VK
AMP-3P
AMP-16P
CN89
CN79
CT1
CT2
CT3
TF2
TF3
TF4
ICF1
ICG3
ICF2
ICF3
ICF4
ICB2
ICE5
Q1~7:C1213A
USED: C1~C38
R1~R64
JP3 CLOSE (CLOSE:1KV)
CAD SF422B
PHOTO_N
ESPK_P
DEF-X
AC2V
X^2
Y^2
X^2 + Y^2
製図 K.KAGEYAMA 1997 "01"13
審査 N.KANEOKA 1997 "01"13
承認 S.OOTSUKA 1997 "01"13
株式会社 日立製作所
PHOTO-1 P.C.B.
25378358
23.PHOTO-1 P.C.B.

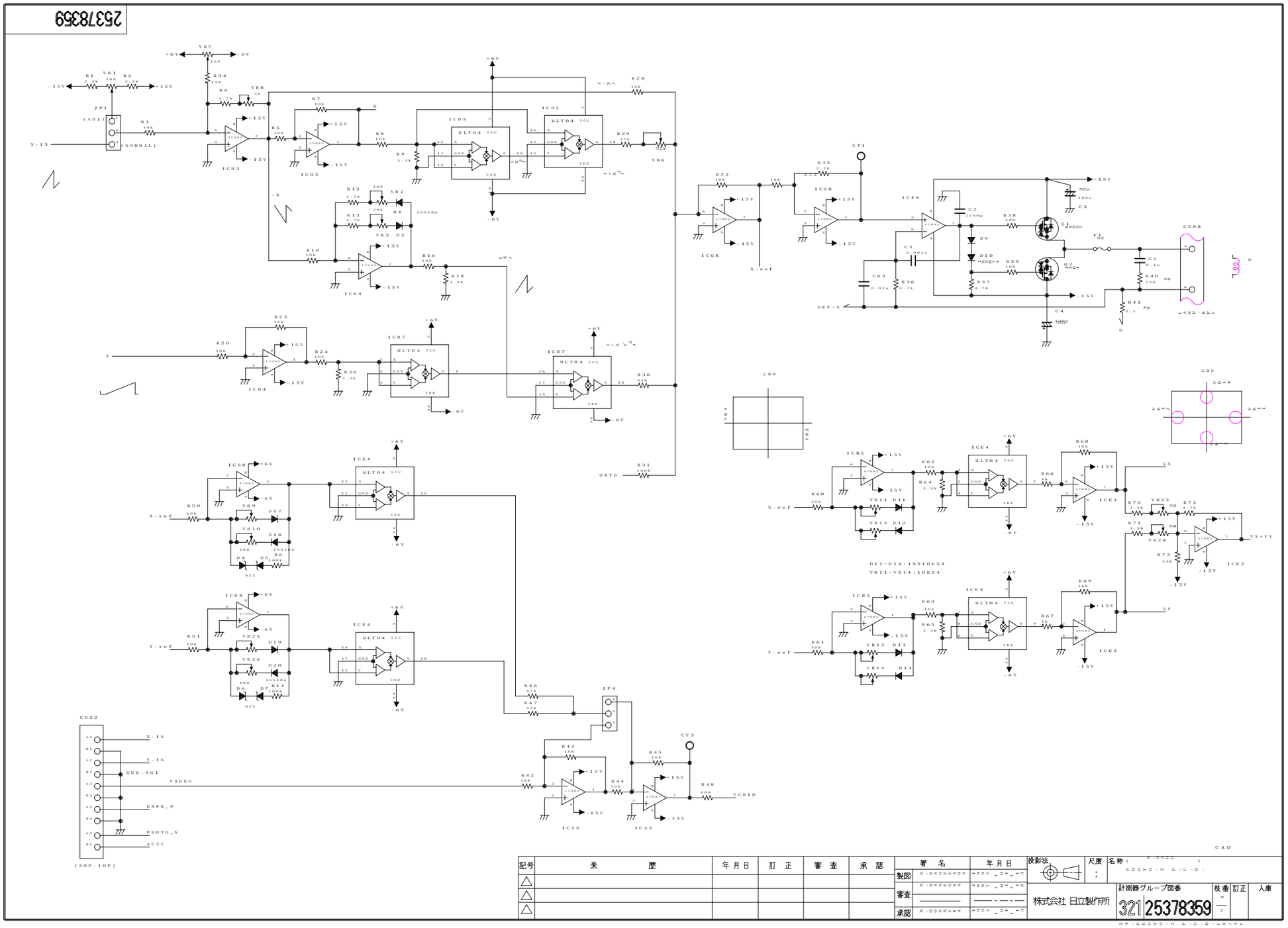
25378359
X-IN
Y-IN
GND-SG1
VIDEO
ESPK_P
PHOTO_N
AC2V
CN22
(AMP-10P)
X-ref
Y-ref
DEF-X
ORTH
VX
VY
VX+VY
YGRID
CT1
CT3
CNR8
D11-D14:1SS106X4
VR11-VR14:10KX4
CAD
株式会社 日立製作所
計測器グループ図番
25378359

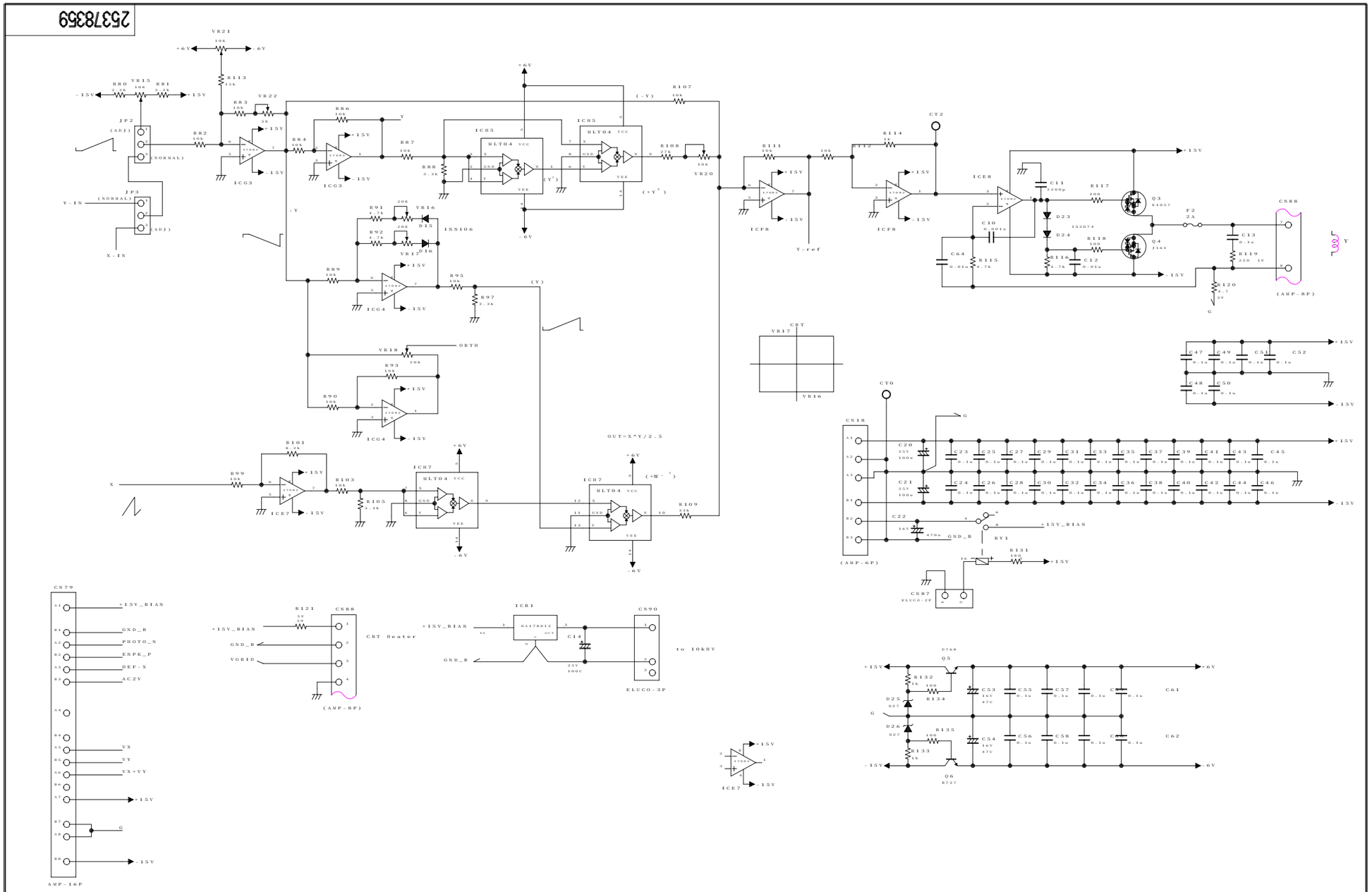

記号	来 歴	年月日	訂 正	審 査	承 認		署 名	年月日	投影法	尺度	名称 (S-5200)
△						製図	K.KAGEYAMA	1997 "01"13		:	PHOTO-2 P.C.B.
△						審査	N.KANEOKA	1997 "01"13	株式会社 日立製作所	計測器グループ図番	枝番 / 訂正 / 入庫
△						承認	S.OOTSUKA	1997 "01"13		321 25378359	2/2

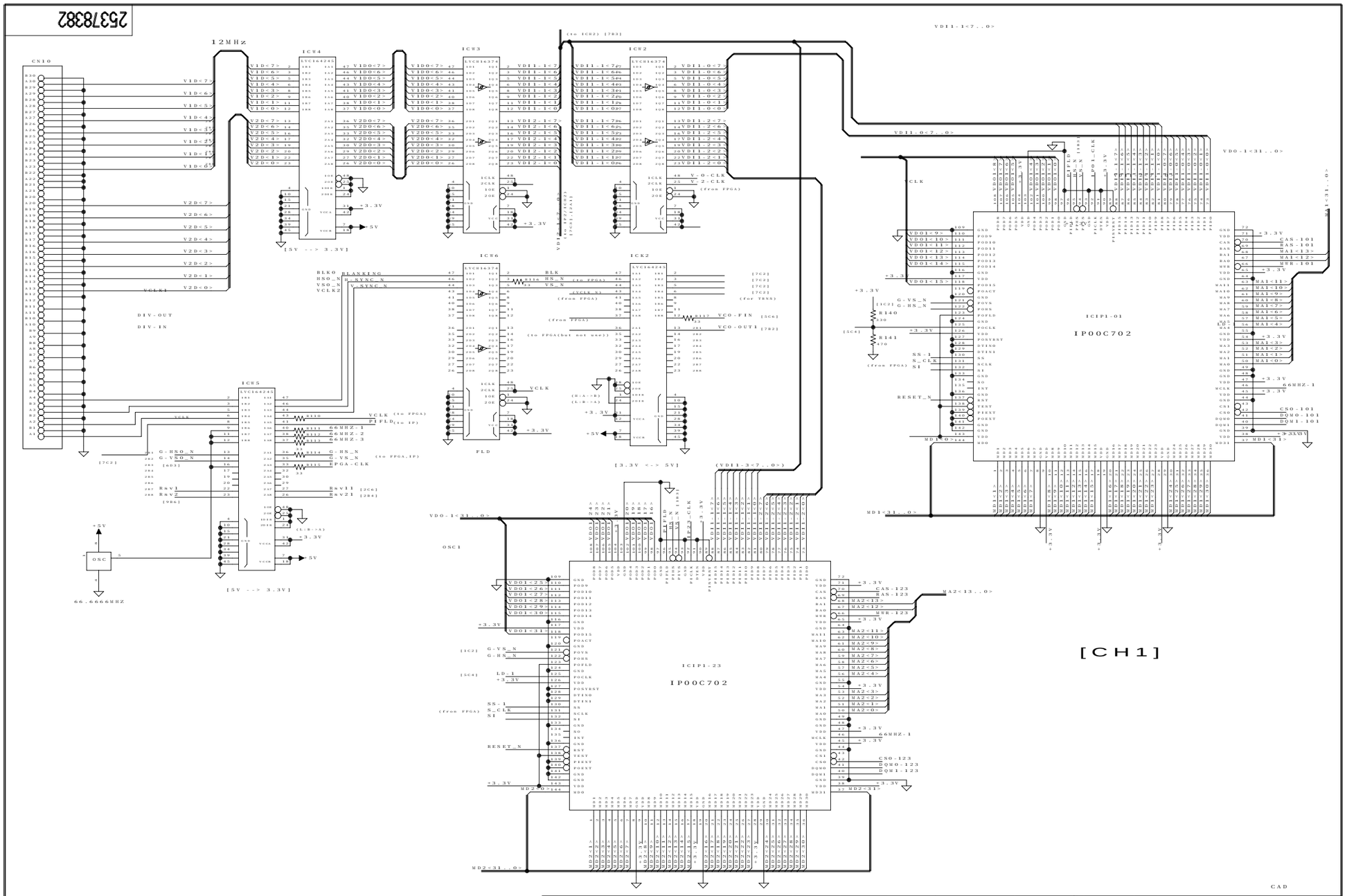

記号	来歴	年月日	訂正	審査	承認
△					
△					
△					

	署名	年月日
製図	K.KAGEYAMA	1998 "07"08
審査	N.KANEOKA	1999 "07"08
承認	S.OOTSUKA	1999 "07"08

投影法 | 尺度 : | 名称 (S-5200) IMP-N P.C.B.

株式会社 日立製作所

計測器グループ図番 32125378382 | 枝番 1/9 | 訂正 | 入庫

25.IMP-N P.C.B.(1/9)

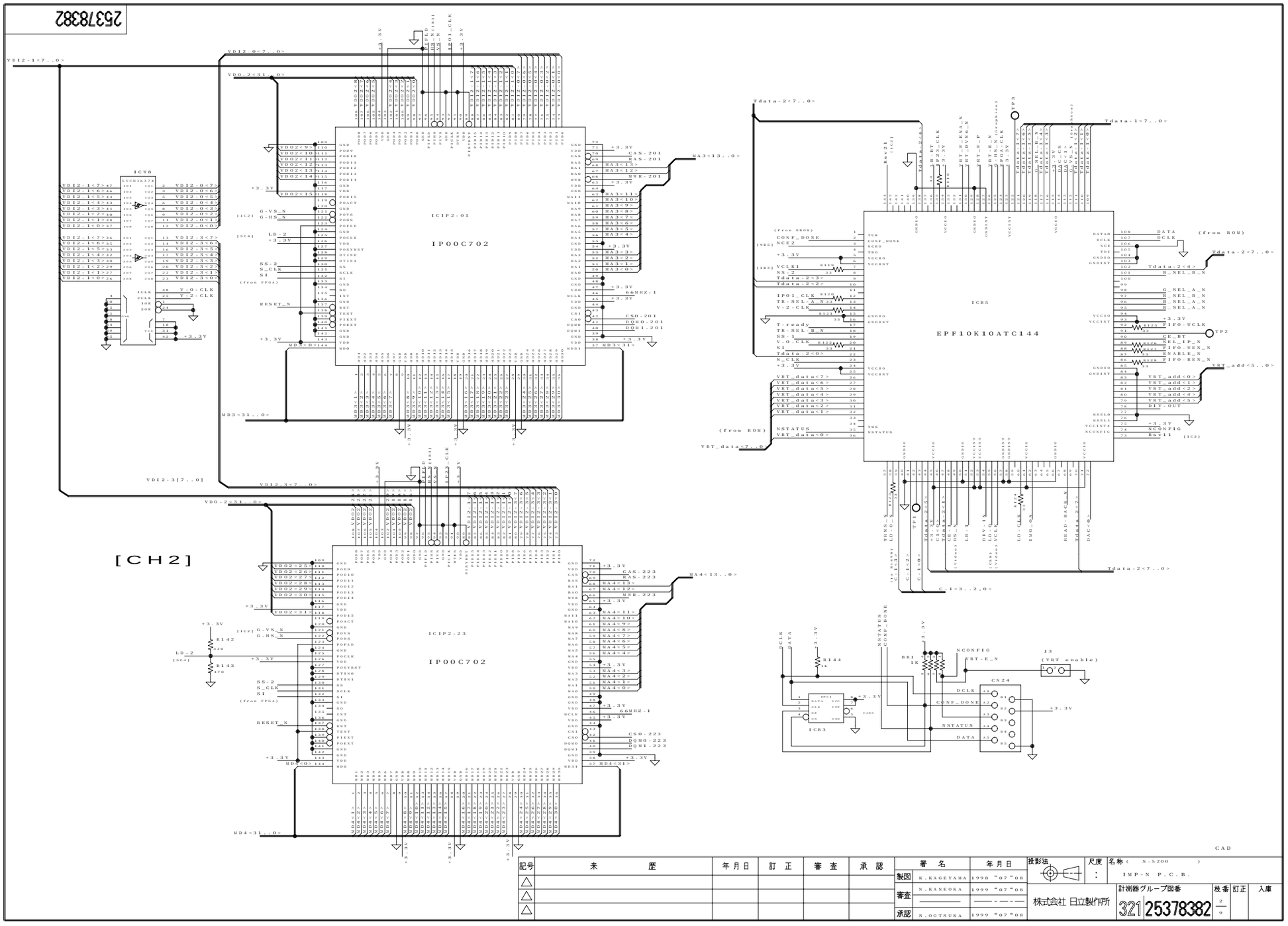
25378382
[CH2]
IC8
IC1P2-01
IP00C702
IC1P2-23
IP00C702
IC5
EPF10K10ATC144
IC3
CN24
J3
(VRT enable)
(from ROM)
(from SROM)
(from FPGA)
CAD
記号
来 歴
年月日
訂 正
審 査
承 認
署 名
製図
K.KAGEYAMA
審査
N.KANEOKA
承認
S.OOTSUKA
1998 "07"08
1999 "07"08
1999 "07"08
投影法
尺度
名称 (S-5200)
IMP-N P.C.B.
株式会社 日立製作所
計測器グループ図番
321 25378382
枝番
訂正
入庫
25.IMP-N P.C.B.(2/9)

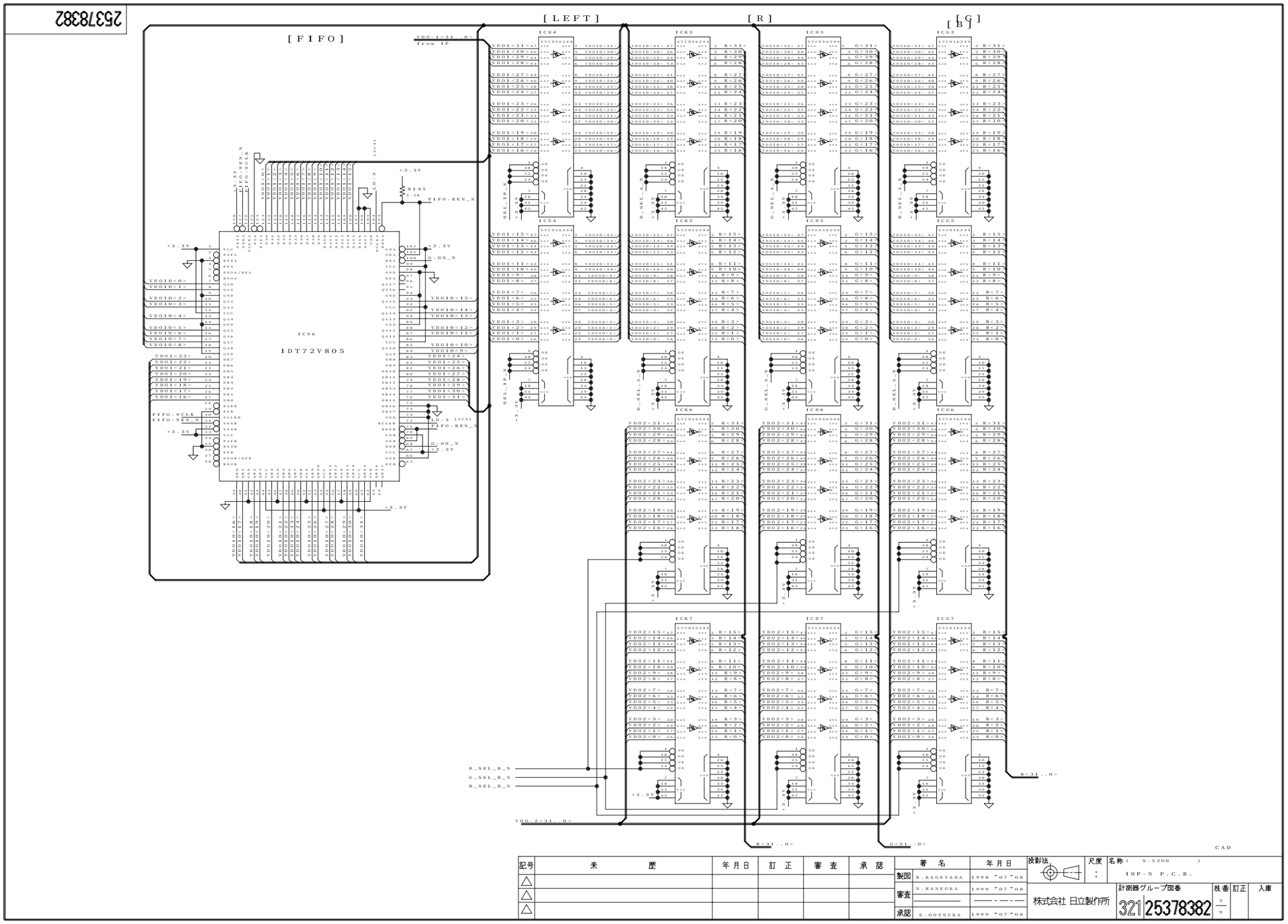

記号	来　　歴	年月日	訂　正	審　査	承　認
△					
△					
△					

	署　名	年月日
製図	K.KAGEYAMA	1998 "07"08
審査	N.KANEOKA	1999 "07"08
承認	S.OOTSUKA	1999 "07"08

投影法　尺度 :　名称（ S-5200 ）IMP-N P.C.B.

株式会社 日立製作所

計測器グループ図番 32125378382　枝番 3/9　訂正　入庫

25.IMP-N P.C.B.(3/9)

25378382

25378382

[01pixel]

[23pixel]

[CH1]

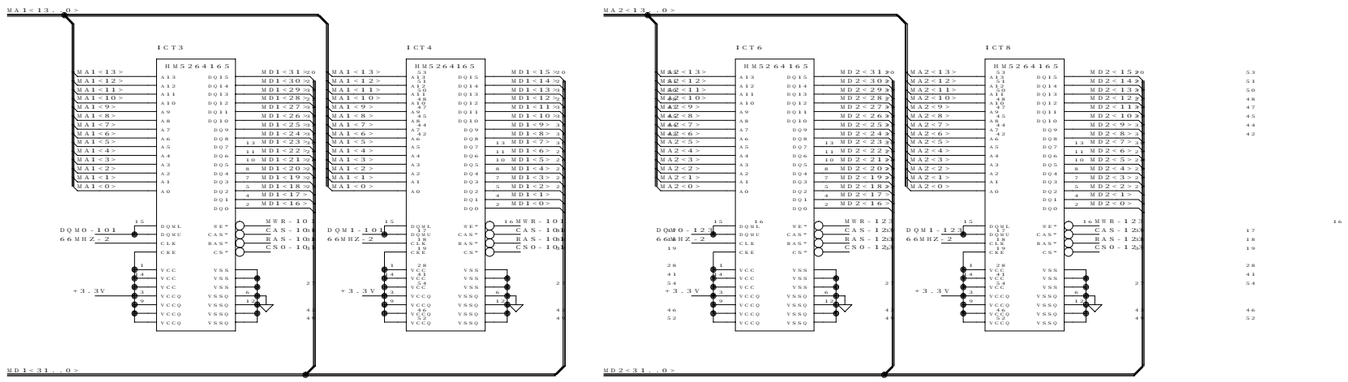

[CH2]

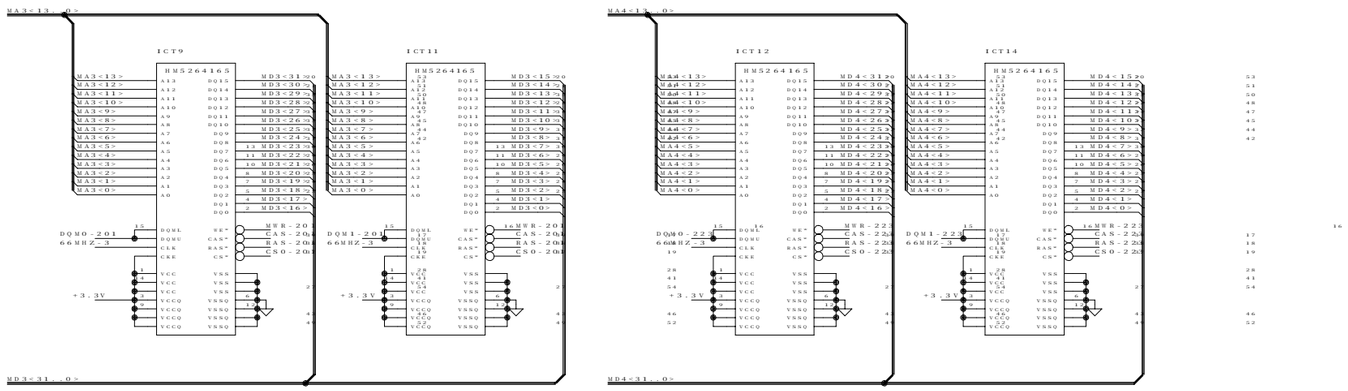

CAD

記号	来　　歴	年月日	訂　正	審　査	承　認
△					
△					
△					

	署　名	年月日
製図	K.KAGEYAMA	1998 "07"08
審査	N.KANEOKA	1999 "07"08
承認	S.OOTSUKA	1999 "07"08

投影法　尺度 :

名称（ S-5200 ）
IMP-N P.C.B.

株式会社 日立製作所

計測器グループ図番 321 25378382　枝番 4/9　訂正　入庫

25.IMP-N P.C.B.(4/9)

25378382

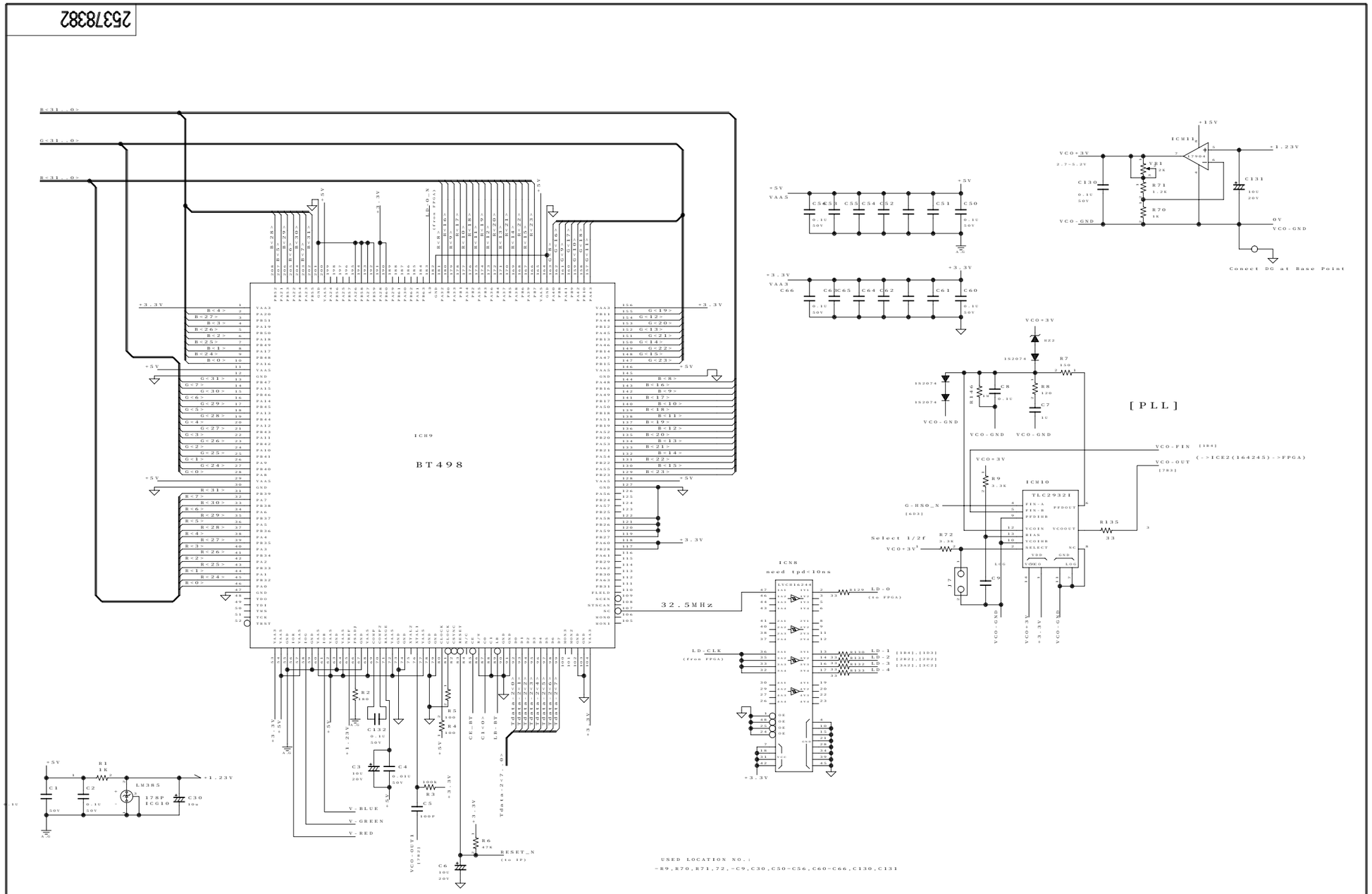

CAD

記号	来 歴	年月日	訂 正	審 査	承 認		署 名	年月日	投影法	尺度	名称 (S-5200)
△						製図	K.KAGEYAMA	1998 - 07 - 08		:	IMP-N P.C.B.
△						審査	N.KANEOKA	1999 - 07 - 08	株式会社 日立製作所		計測器グループ図番 321 25378382 枝番 5/9 訂正 入庫
△						承認	S.OOTSUKA	1999 - 07 - 08			

25.IMP-N P.C.B.(5/9)

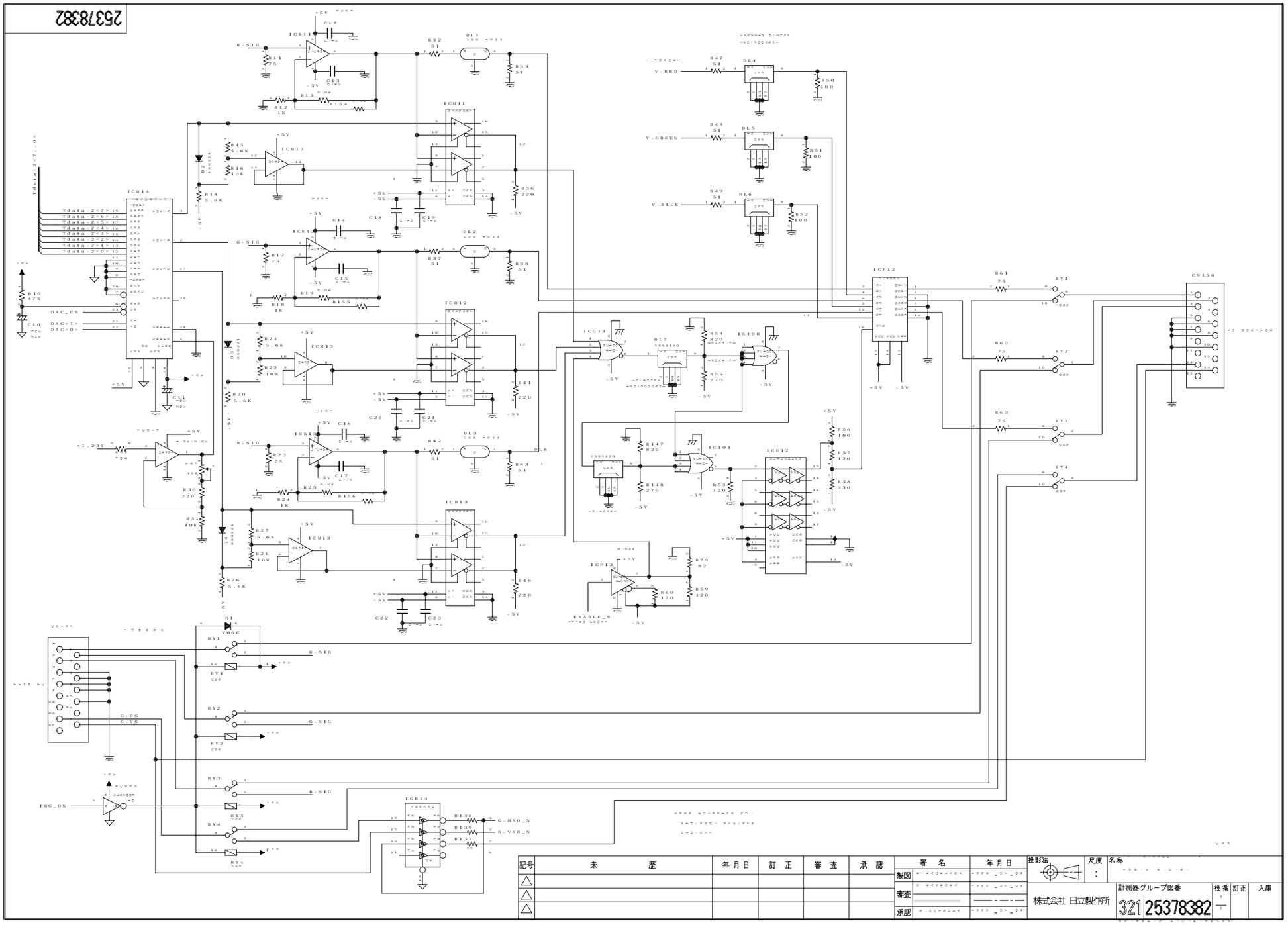

記号	来歴	年月日	訂正	審査	承認
△					
△					
△					

	署名	年月日
製図		
審査		
承認		

投影法 | 尺度 : | 名称

株式会社 日立製作所

計測器グループ図番 32125378382 | 枝番 | 訂正 | 入庫

25378382

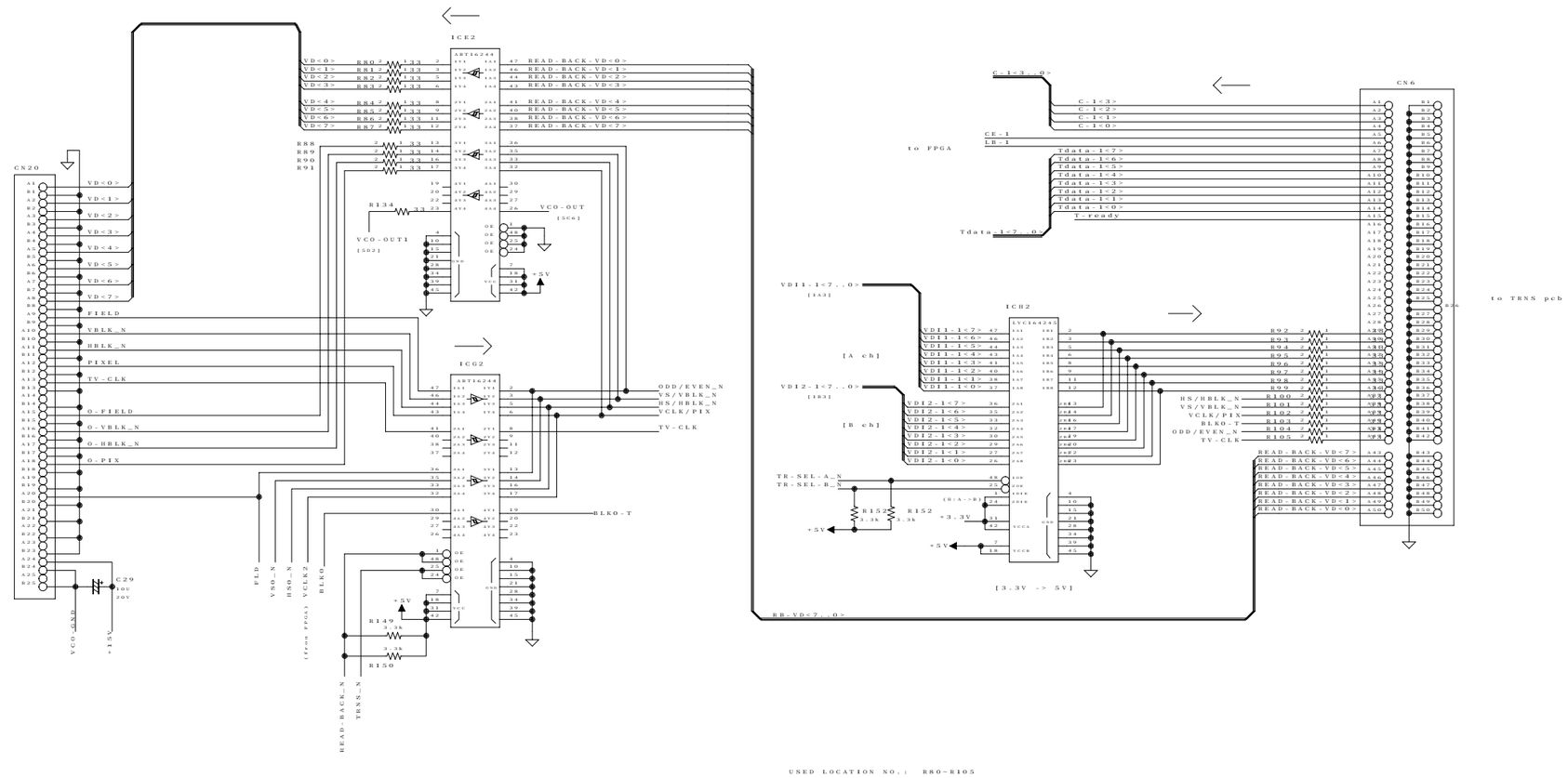

CAD

記号	来 歴	年月日	訂 正	審 査	承 認
△					
△					
△					

	署 名	年月日
製図	K.KAGEYAMA	1998 "07"08
審査	N.KANEOKA	1999 " 0708
承認	S.OOTSUKA	1999 "07"08

投影法 | 尺度 : | 名称 (S-5200) IMP-N P.C.B.

株式会社 日立製作所

計測器グループ図番 321 25378382 | 枝番 7/9 | 訂正 | 入庫

25.IMP-N P.C.B.(7/9)

25378382

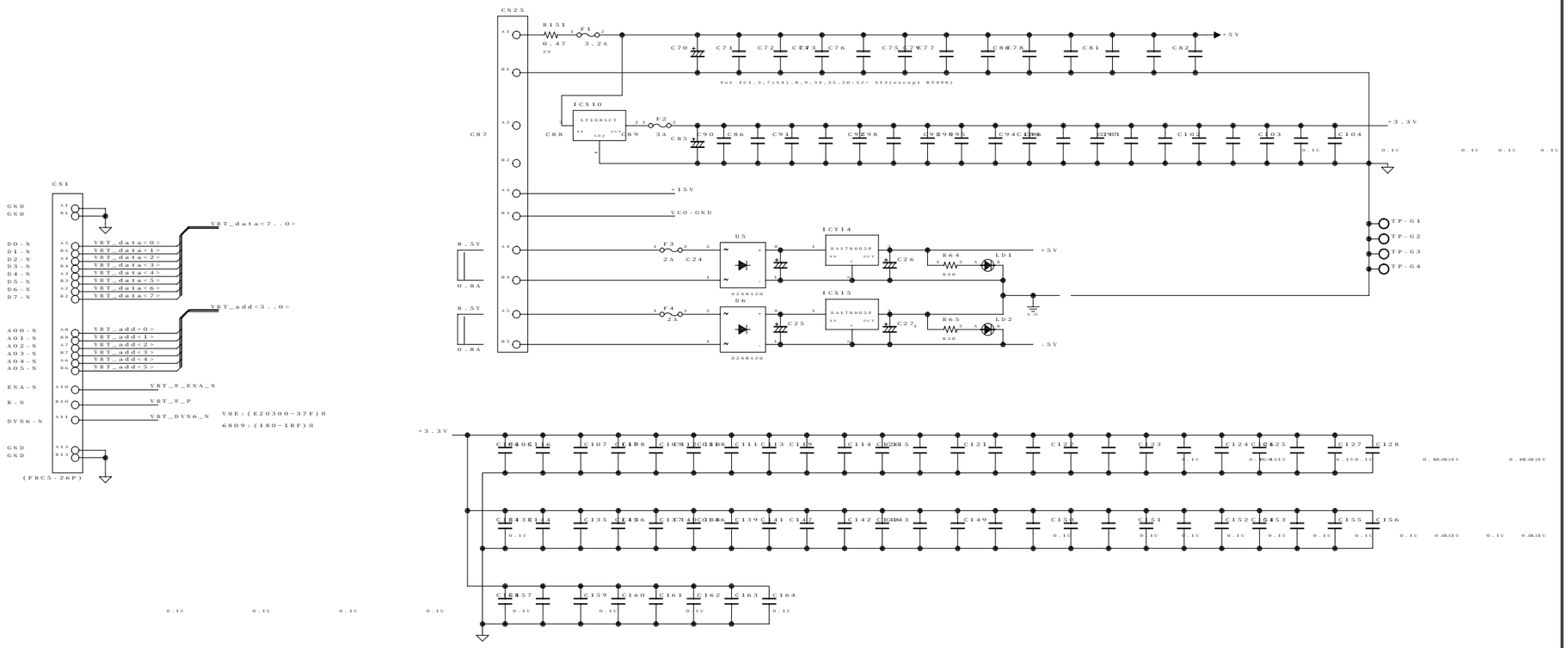

記号	来歴	年月日	訂正	審査	承認
△					
△					
△					

	署名	年月日
製図	K.KAGEYAMA	1998-07-08
審査	N.KANEOKA	1999-07-08
承認	S.OOTSUKA	1999-07-08

投影法 | 尺度 : | 名称 (S-5200) IMP-N P.C.B.

株式会社 日立製作所

計測器グループ図番 321 25378382 枝番 8/9 訂正 入庫

25.IMP-N P.C.B.(8/9)

25378382

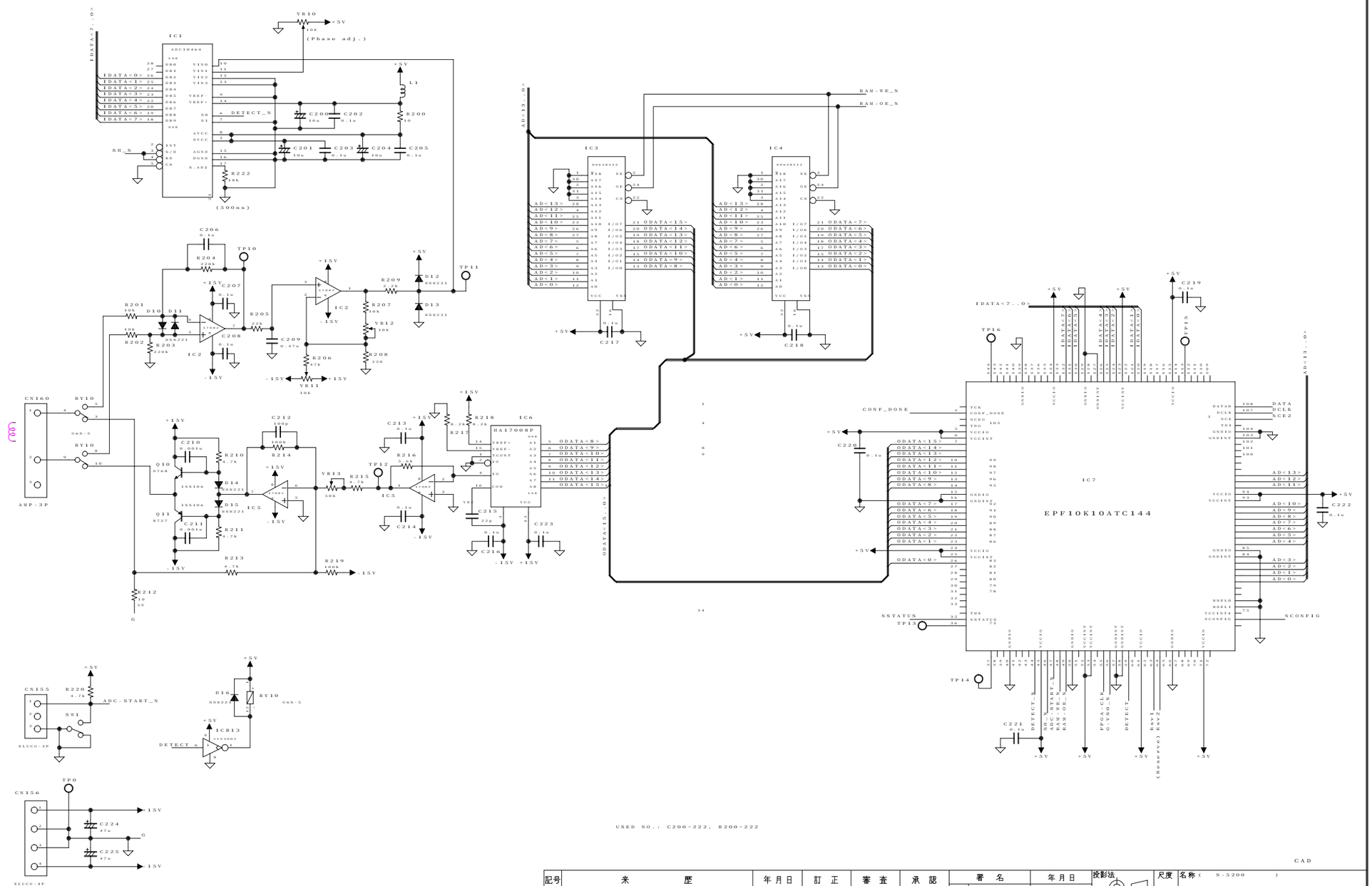

CAD

記号	来 歴	年月日	訂 正	審 査	承 認		署 名	年月日	投影法	尺度	名称 (S-5200)
△						製図	K.KAGEYAMA	1998 - 07 - 08		:	IMP-N P.C.B.
△						審査	N.KANEOKA	1999 -07-08	株式会社 日立製作所		計測器グループ図番 321 25378382
△						承認	S.OOTSUKA	1999 -07-08			枝番 9/9 訂正 入庫

25.IMP-N P.C.B.(9/9)

35378708

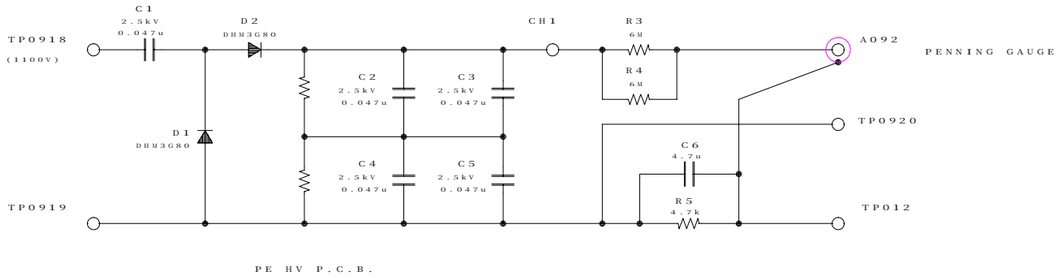

CAD K0106

記号	来歴	年月日	訂正	審査	承認
△					
△					
△					

	署名	年月日
製図	K.KAGEYAMA	-10-21
審査	N.KANEOKA	2000-10-21
	――――	――――
承認	S.OOTSUKA	2000-10-21

投影法 | 尺度 : | 名称 (S-5200) PE HV P.C.B.

株式会社 日立製作所

計測器グループ図番 321 35378708 | 枝番 1/1 | 訂正 | 入庫

26.PE HV P.C.B.

KAIRO

25378709

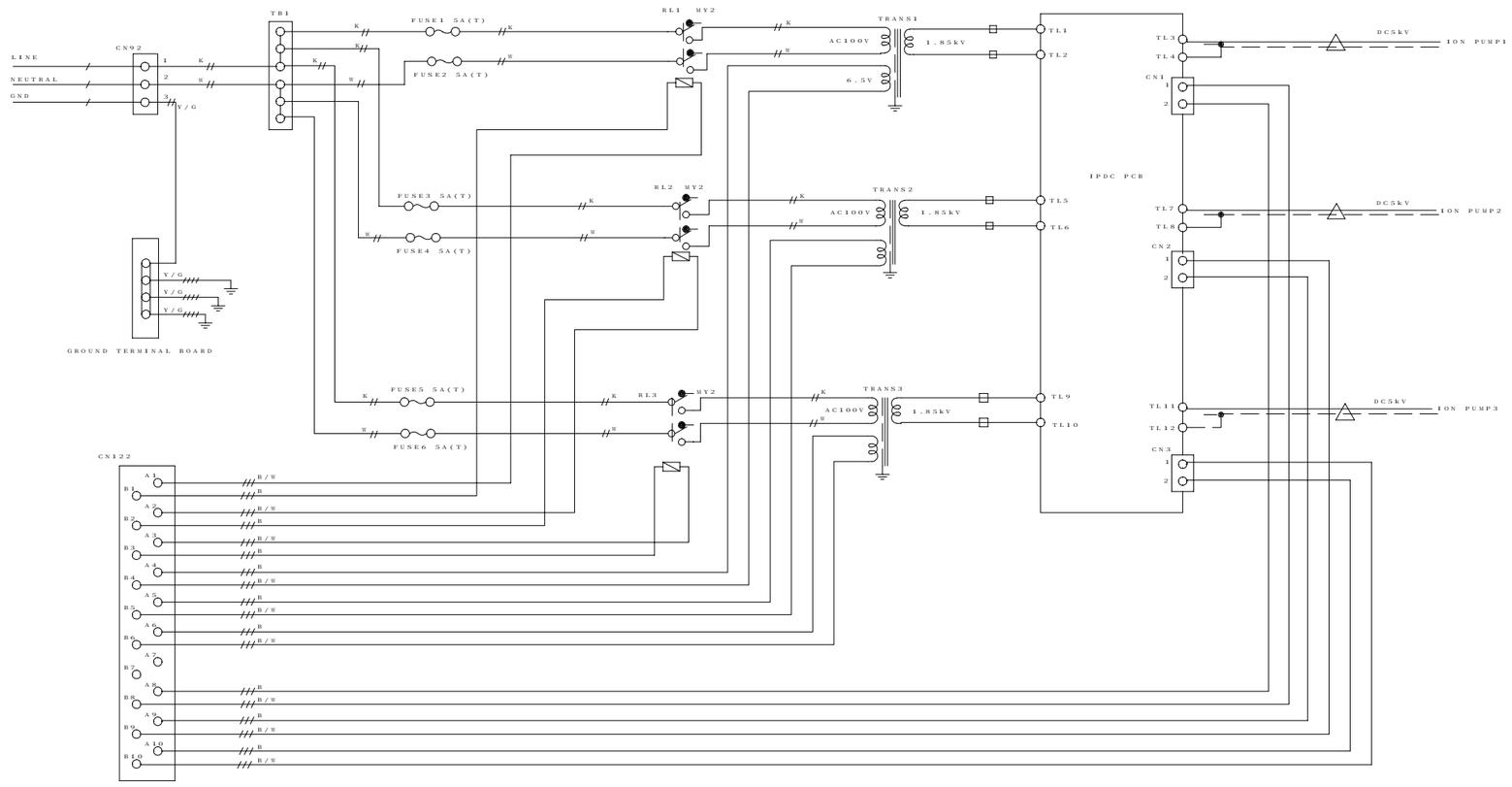

STO 3X16AWG	1.3mm²
UK1015 1X16AWG	1.3mm²
UL1007 1X22AWG	0.3mm²
UL1015 1X20AWG	0.5mm²
UL3239G 22AWG	0.3mm²
UL3239 20KV-DC 20AWG	0.5mm²

K:BLACK W:WHITE B:BLUE B/W:BLUE/WHITE

CAD

記号	来歴	年月日	訂正	審査	承認
△					
△					
△					

	署名	年月日
製図	A.MOURI	2000-10-21
審査	N.KANEOKA	2000-10-21
承認	K.KAGEYAMA	2000-10-21

投影法 | 尺度 : | 名称 (S-5200) ION PUMP POWER SUPPLY

株式会社 日立製作所

計測器グループ図番 321 25378709 | 枝番 1/1 | 訂正 | 入庫

27.ION PUMP POWER SUPPLY

VRT-250L SERIES ECPU247 BLOCK DIAGRAM

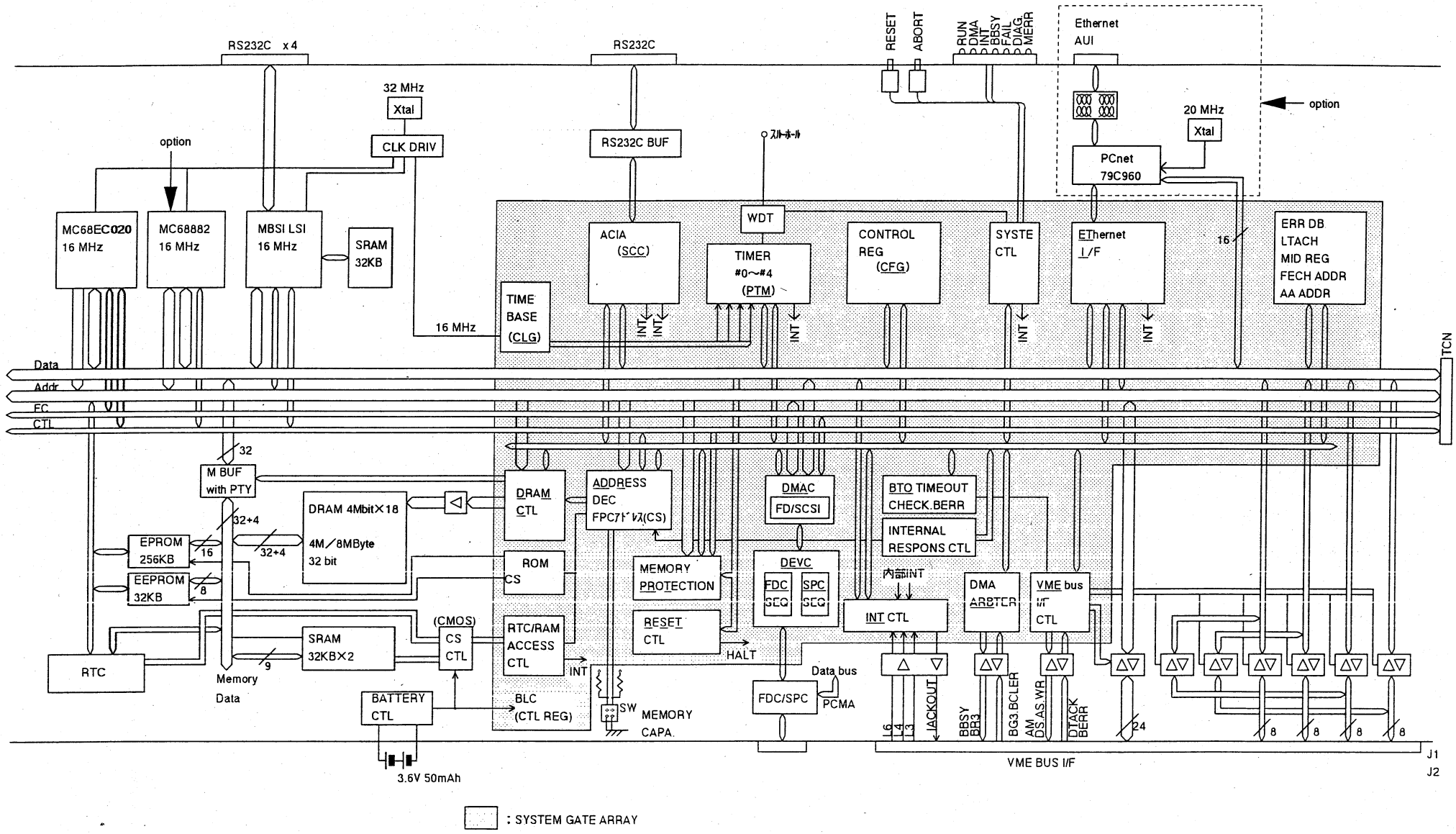

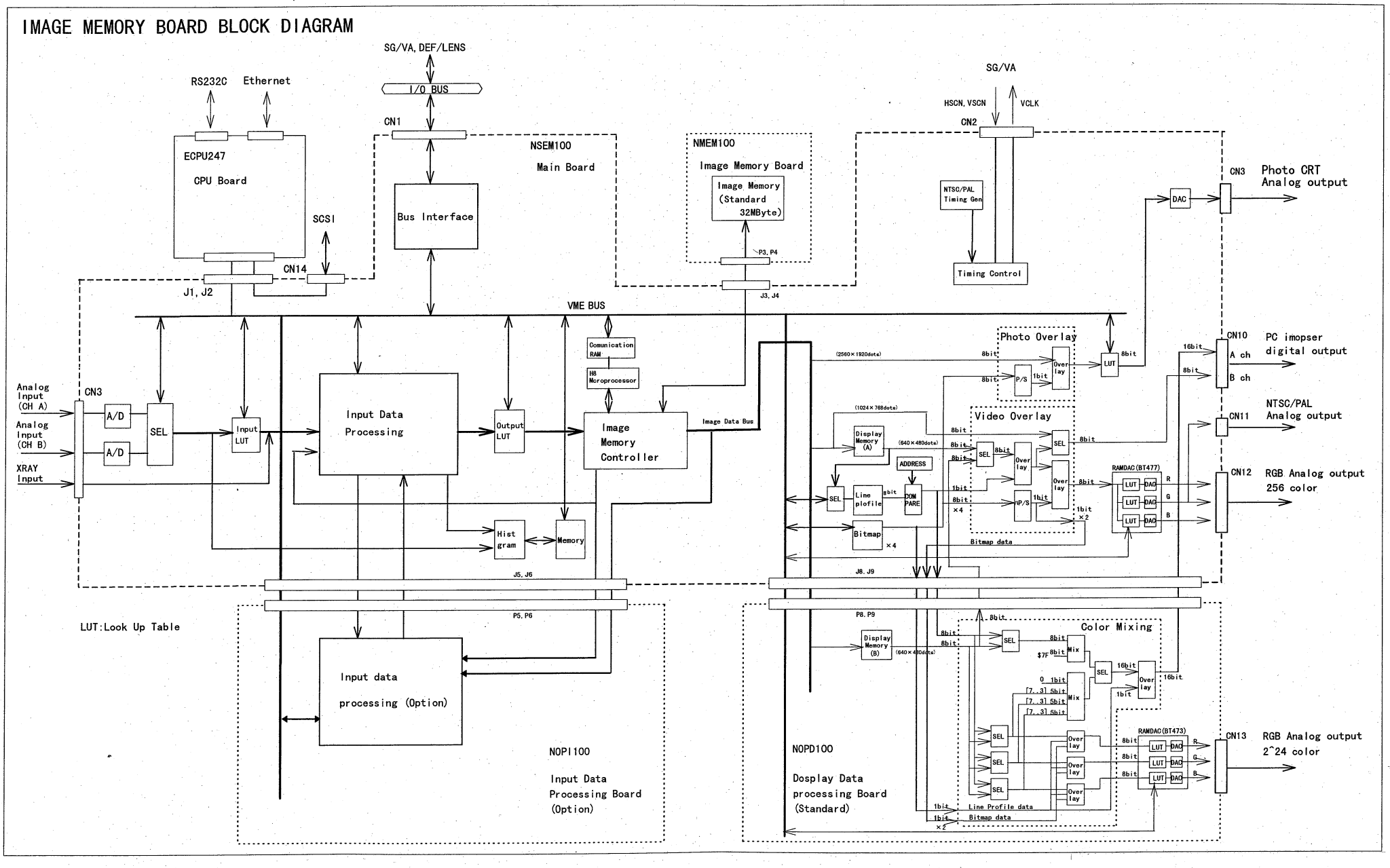

29.IMAGE MEMORY BLOCK DIAGRAM

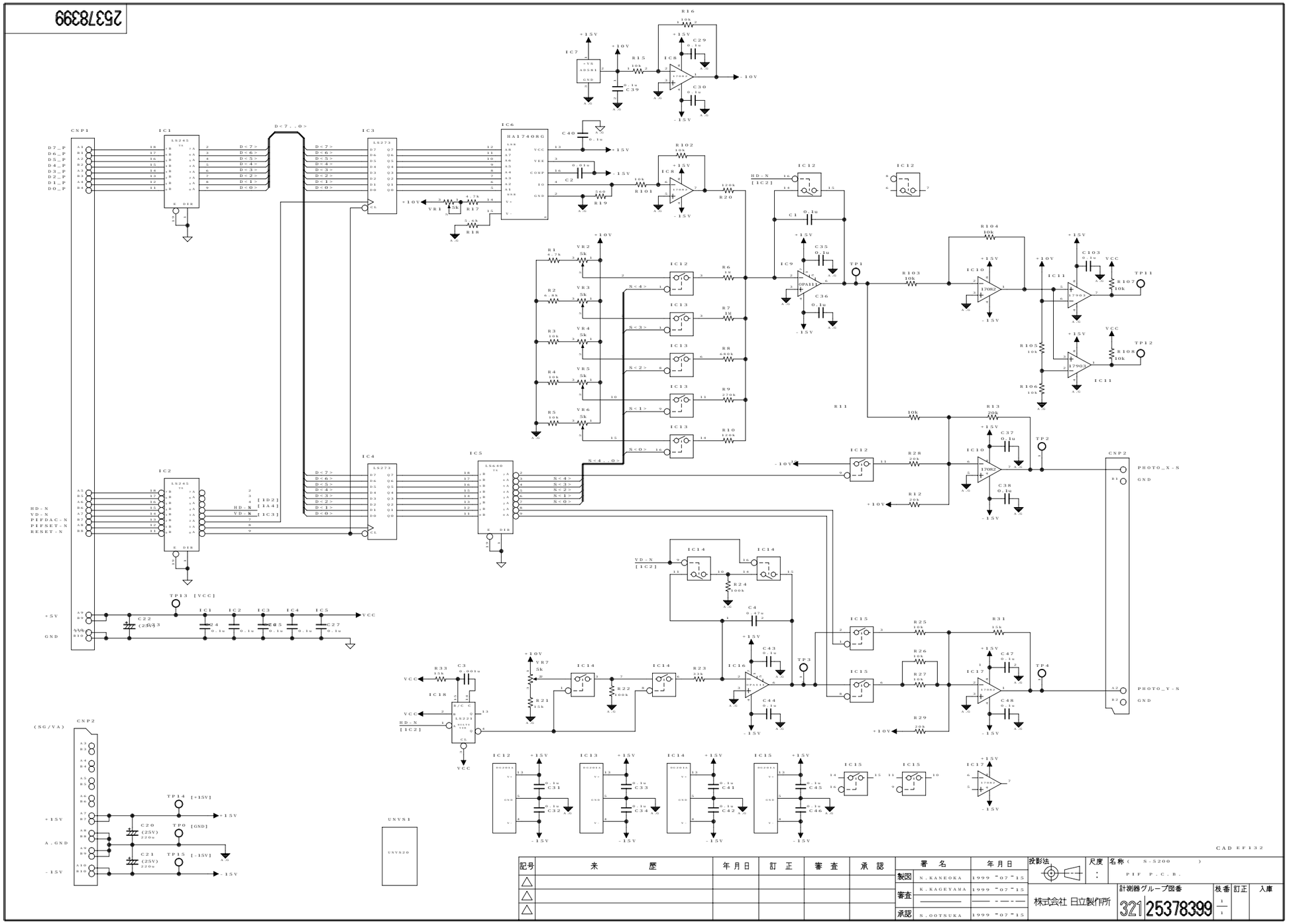
25378399
CNP1
CNP2
IC1
IC2
IC3
IC4
IC5
IC6
IC7
IC8
IC9
IC10
IC11
IC12
IC13
IC14
IC15
IC16
IC17
IC18
D<7..0>
S<4..0>
HD-N
VD-N
PIFDAC-N
PIFSET-N
RESET-N
PHOTO_X-S
PHOTO_Y-S
GND
VCC
TP1
TP2
TP3
TP4
TP11
TP12
TP13 [VCC]
TP14 [+15V]
TP0 [GND]
TP15 [-15V]
(SG/VA)
A.GND
UNVS1
CAD EF132
30.PIF P.C.B.
記号
来 歴
年月日
訂 正
審 査
承 認
署 名
製図 N.KANEOKA 1999 "07"15
審査 K.KAGEYAMA 1999 "07"15
承認 S.OOTSUKA 1999 "07"15
投影法
尺度 :
名称 (S-5200)
PIF P.C.B.
株式会社 日立製作所
計測器グループ図番
321 25378399
枝番 1/1
訂正
入庫

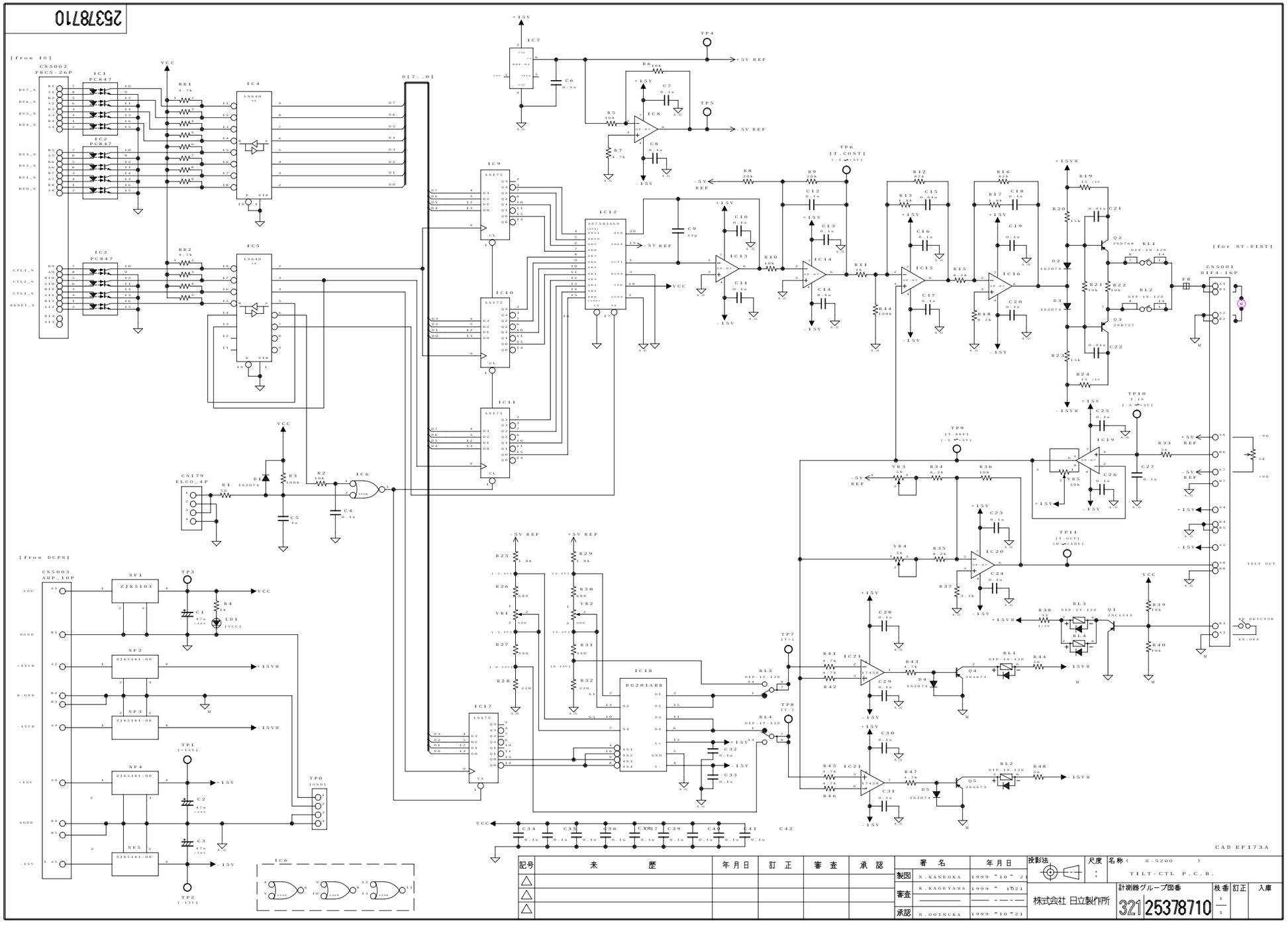
25378710
[from IO]
CN5002
FRC5-26P
IC1
PC847
IC2
PC847
IC3
PC847
IC4
LS640
IC5
LS640
RR1
4.7k
RR2
4.7k
D[7..0]
IC7
REF-02
TP4
+5V REF
TP5
-5V REF
R6
10k
R5
10k
R7
4.7k
IC8
C6
0.1u
C7
0.1u
C8
0.1u
IC9
LS175
IC10
LS175
IC11
LS175
IC12
AD7545ALN
C9
33p
IC13
IC14
IC15
IC16
IC17
LS175
IC18
DG201ABK
TP6
[T_CONT]
(-5~+5V)
R8
20k
R9
20k
R10
10k
R11
1k
R14
100k
R12
20k
R13
1.8k
R15
8.2k
R16
20k
R17
1.8k
R18
8.2k
R19
15/1W
R20
15k
R21
39k
R22
10k
R23
15k
R24
15/1W
C21
0.01u
C22
0.01u
Q2
2SD768
Q3
2SB727
RL1
DIP-1E-12D
RL2
DIP-1E-12D
D2
1S2074
D3
1S2074
FB
CN5001
HIF4-16P
[for ST-DIST]
TILT OUT
RK DETECTOR
IN:OFF
TP10
Y-IN
(-5~+5V)
TP9
(Y-REF)
(-5~+5V)
TP11
(Y-OUT)
(0~+10V)
IC19
IC20
IC21
LM358
VR3
5k
VR4
5k
VR5
20k
R33
1k
R34
8.2k
R35
8.2k
R36
10k
R37
8.2k
R38
33
1/2W
R39
10k
R40
10k
Q1
2SC1213
RL3
DIP-1T-12D
RL4
DIP-1T-12D
Q4
2SA673
Q5
2SA673
D4
1S2074
D5
1S2074
R41
4.7k
R42
4.7k
R43
4.7k
R44
56
R45
4.7k
R46
4.7k
R47
4.7k
R48
56
TP7
[T+]
TP8
[T-]
CN5003
AMP_10P
NF1
ZJK5103
NF2
ZJK5181-00
NF3
ZJK5181-00
NF4
ZJK5181-00
NF5
ZJK5181-00
TP3
TP1
[+15V]
TP2
[-15V]
TP0
[GND]
R4
1k
LD1
[VCC]
C1
47u
16V
C2
47u
16V
C3
47u
16V
CN179
ELCO_4P
D1
1S2074
R1
1k
R3
100k
R2
100k
C5
1u
C4
0.1u
IC6
LS00
R25
1.8k
R26
680
VR1
100
R27
330
R28
220
R29
1.8k
R30
680
VR2
100
R31
330
R32
220
C32
0.1u
C33
0.1u
C34
0.1u
C35
0.1u
C36
0.1u
C37
0.1u
C38
0.1u
C39
0.1u
C40
0.1u
C41
0.1u
C42
CAD EF173A
記号
来歴
年月日
訂正
審査
承認
製図
N.KANEOKA
1999-10-21
審査
K.KAGEYAMA
1999-10-21
承認
S.OOTSUKA
1999-10-21
投影法
尺度
名称 (S-5200)
TILT-CTL P.C.B.
株式会社 日立製作所
計測器グループ図番
321 25378710
枝番
訂正
入庫
31.TILT-CTL P.C.B.

25378395

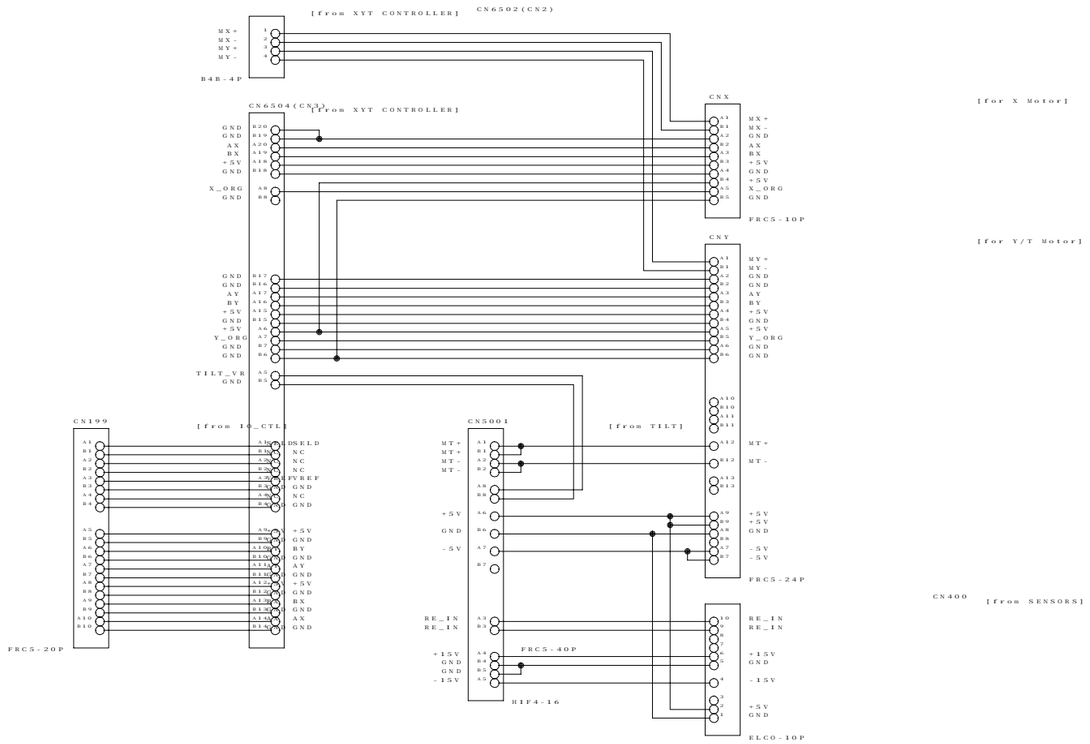

CAD EF119A

記号	来 歴	年月日	訂 正	審 査	承 認
△					
△					
△					

	署 名	年月日
製図	N.KANEOKA	1999 -04-16
審査	K.KAGEYAMA	1999 -04-16
承認	S.OOTSUKA	1999 -04-16

投影法 | 尺度 : | 名称 (S-5200) ST-DIST P.C.B.

株式会社 日立製作所

計測器グループ図番 32125378395 | 枝番 1/1 | 訂正 | 入庫

32.ST-DIST P.C.B.

35378712

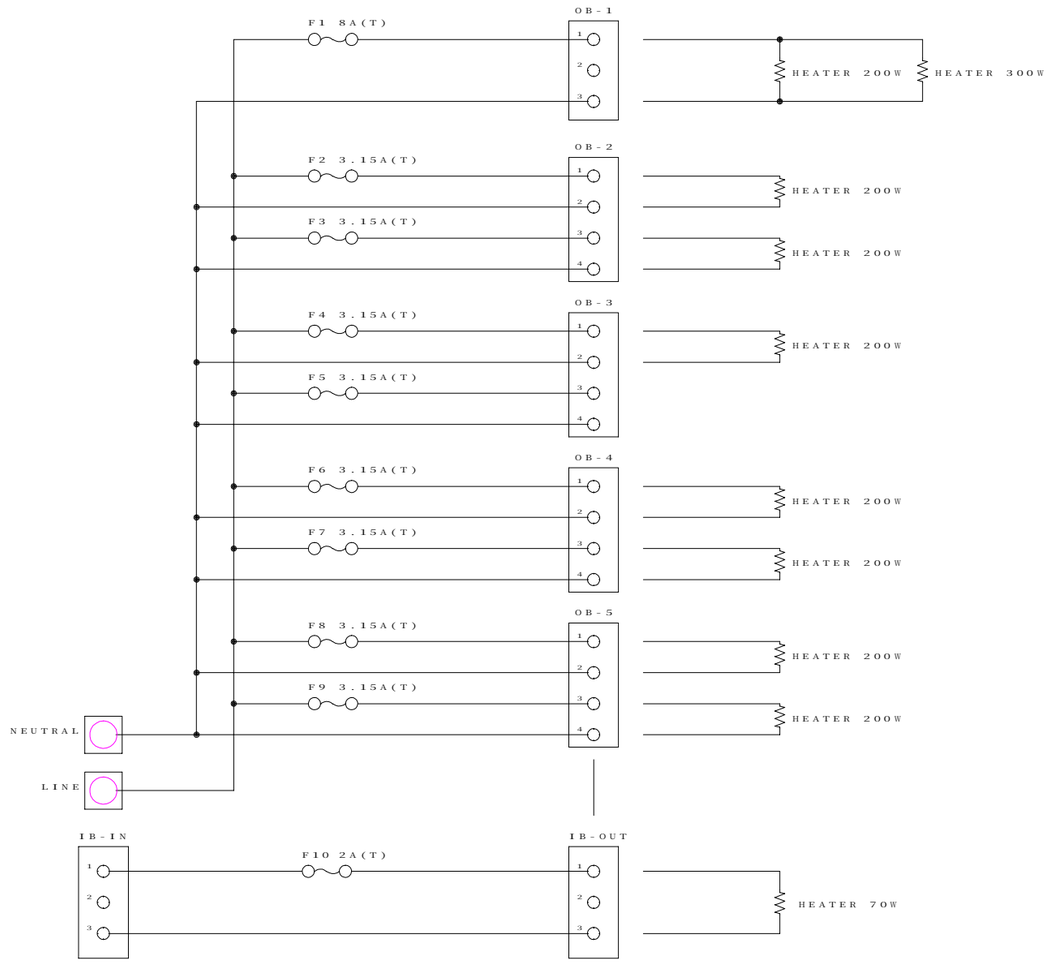

CAD

記号	来　　歴	年月日	訂　正	審　査	承　認
△					
△					
△					

	署　名	年月日
製図	A.MOURI	2000-10-21
審査	N.KANEOKA	2000-10-21
承認	K.KAGEYAMA	2000-10-21

投影法　尺度　：

名称（ S-5200 ）
BAKE P.C.B

株式会社 日立製作所

計測器グループ図番 321 35378712

枝番 1/1　訂正　入庫

33.BAKE P.C.B

KAIRO

35378711

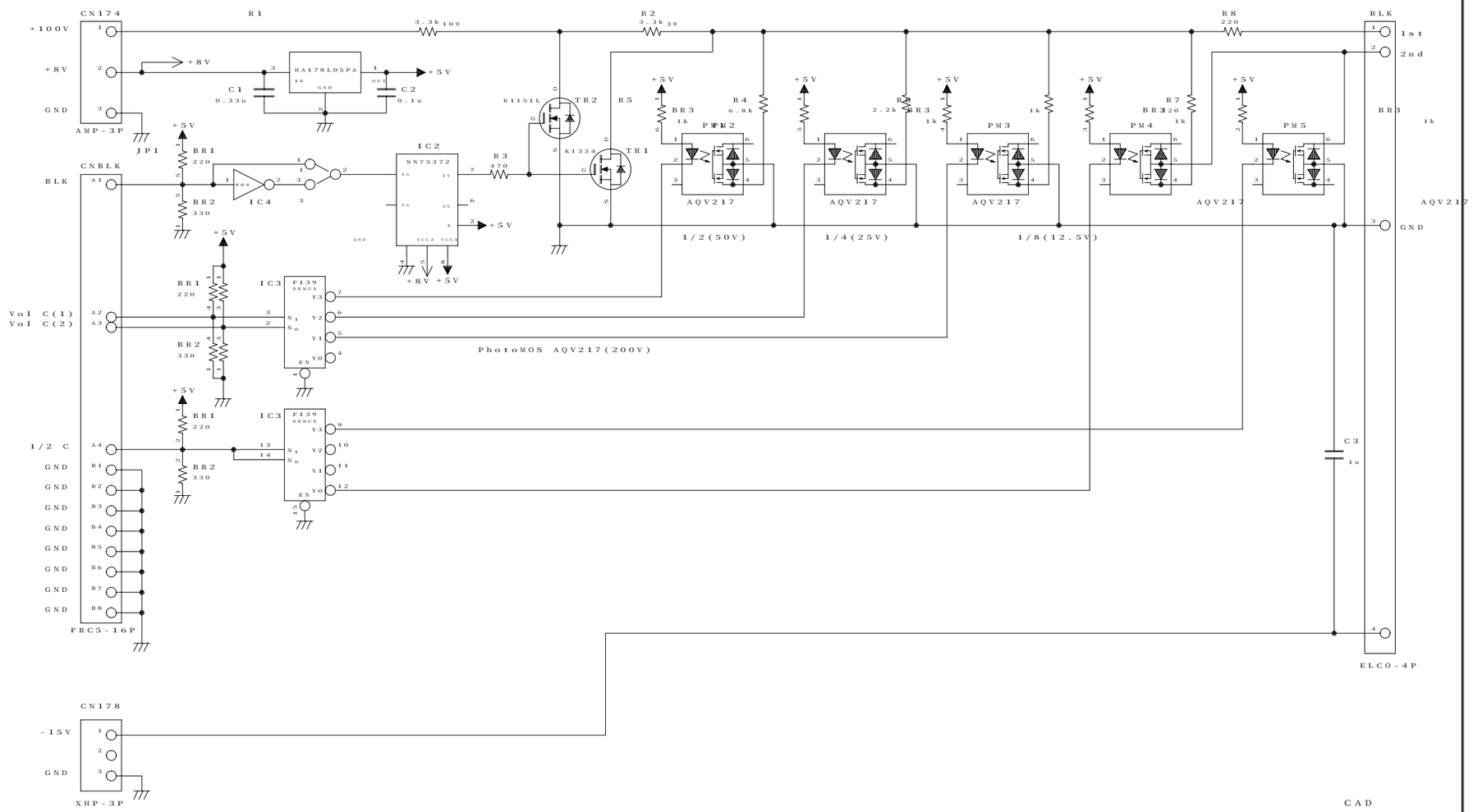

記号	来歴	年月日	訂正	審査	承認
△					
△					
△					

	署名	年月日
製図	K.KAGEYAMA	2000-10-21
審査	N.KANEOKA	2000-10-21
	――――	―― -――
承認	S.OOTSUKA	2000-10-21

投影法 | 尺度 : | 名称 (S-5200) BLK P.C.B.

株式会社 日立製作所

計測器グループ図番 321 35378711 | 枝番 1/1 | 訂正 | 入庫

34.BLK P.C.B.

KAIRO

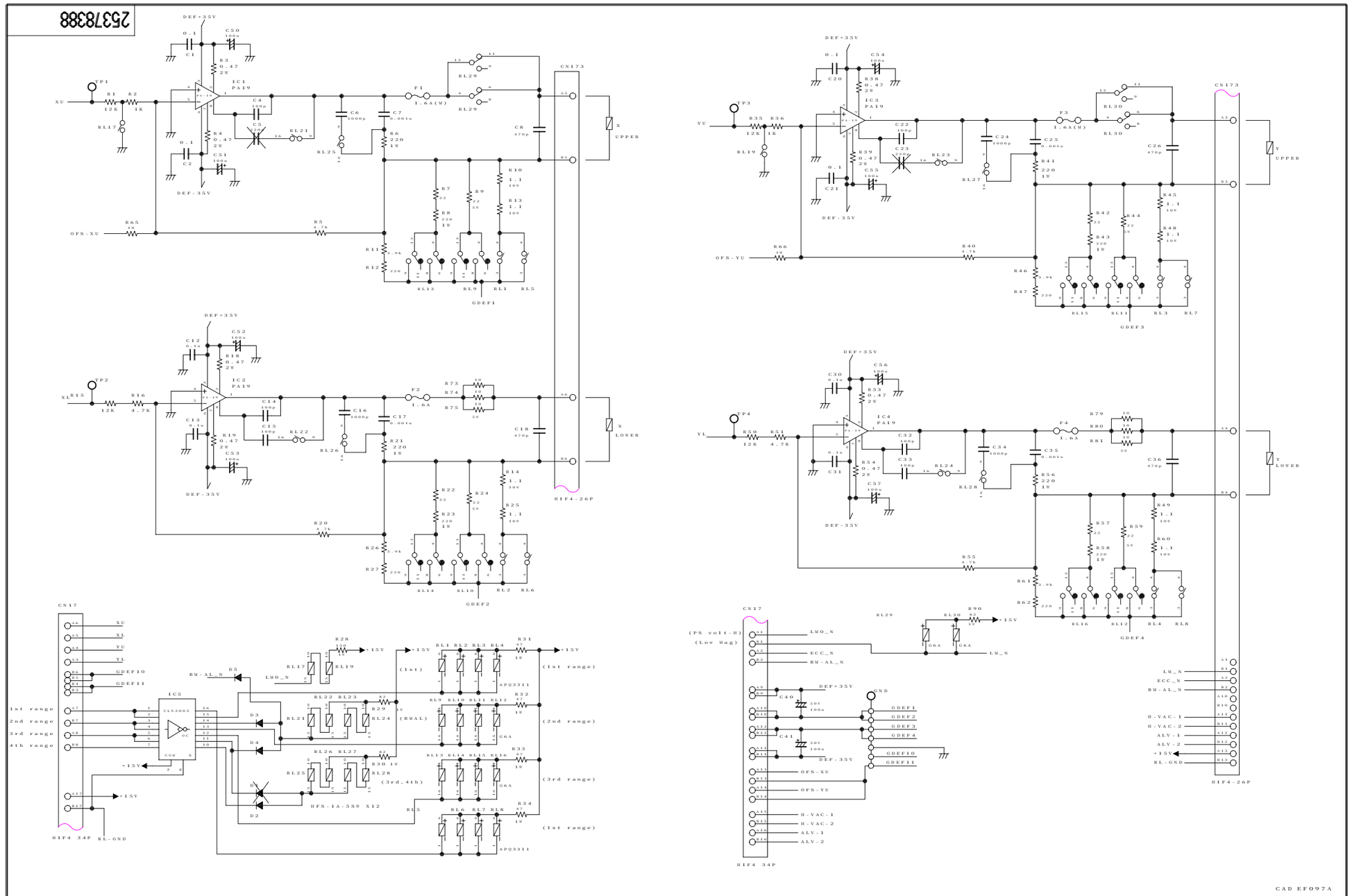

記号	来 歴	年月日	訂 正	審 査	承 認
△					
△					
△					

	署 名	年月日
製図	K.KAGEYAMA	1999 "03"26
審査	N.KANEOKA	1999 " 0526
承認	S.OOTSUKA	1999 " 0526

投影法 | 尺度 : | 名称 (S-5200) PC-DEF(DEFAMP) P.C.B.

株式会社 日立製作所

計測器グループ図番 321 25378388 | 枝番 1/1 | 訂正 | 入庫

35.PC-DEF(DEFAMP) P.C.B.

35378380

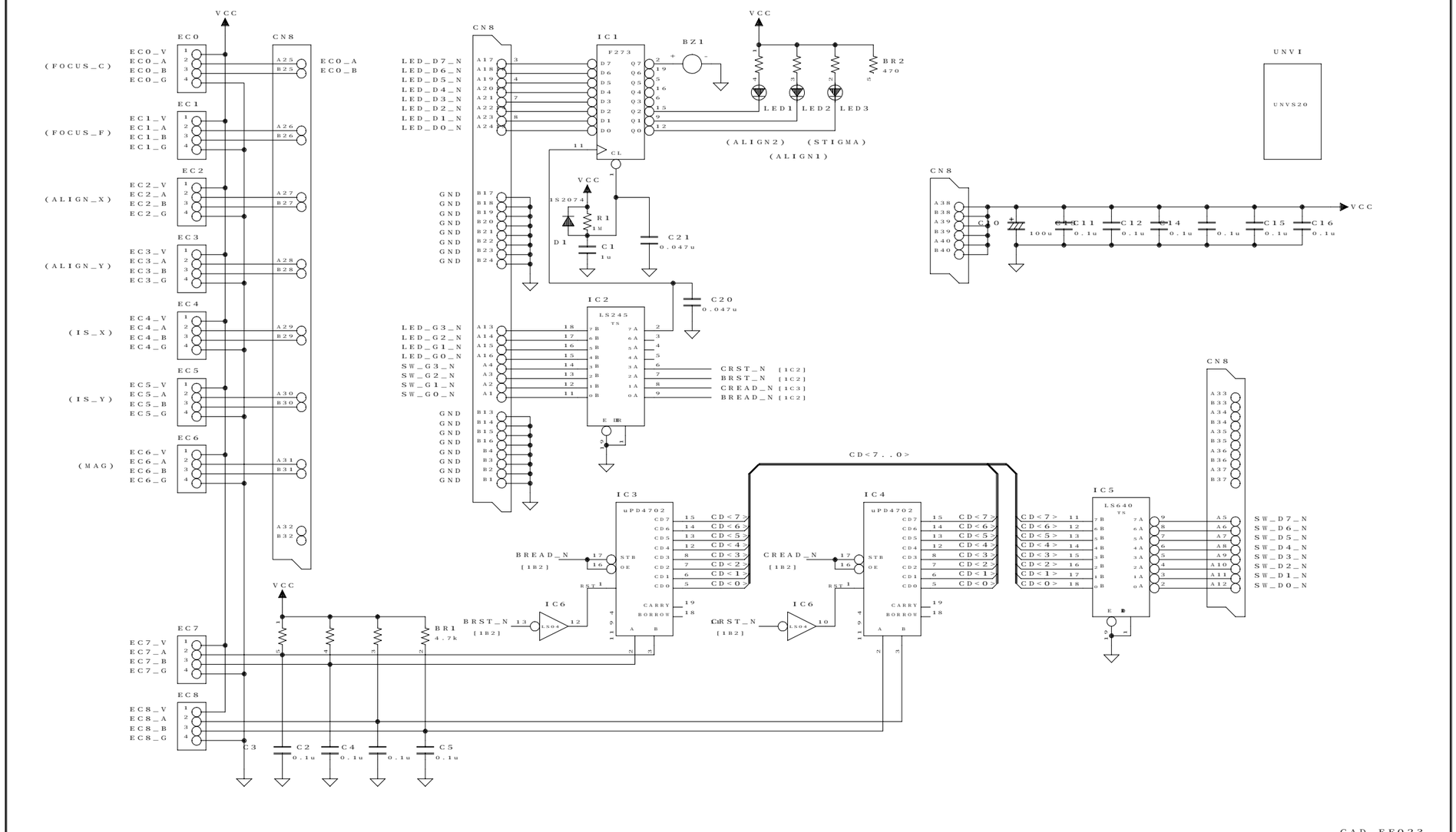

記号	来　　歴	年月日	訂　正	審　査	承　認
△					
△					
△					

	署　名	年月日
製図	N.KANEOKA	1998 -03-24
審査	K.KAGEYAMA	1998 -03-24
	――――	―― - ―― - ――
承認	S.OOTSUKA	1998 -03-24

投影法　尺度　：

名称（S-5200　　）
NEW PANEL P.C.B.

株式会社 日立製作所

計測器グループ図番 321 35378380　枚番 1/1　訂正　入庫

36.NEW PANEL P.C.B.

KAIRO

25378700

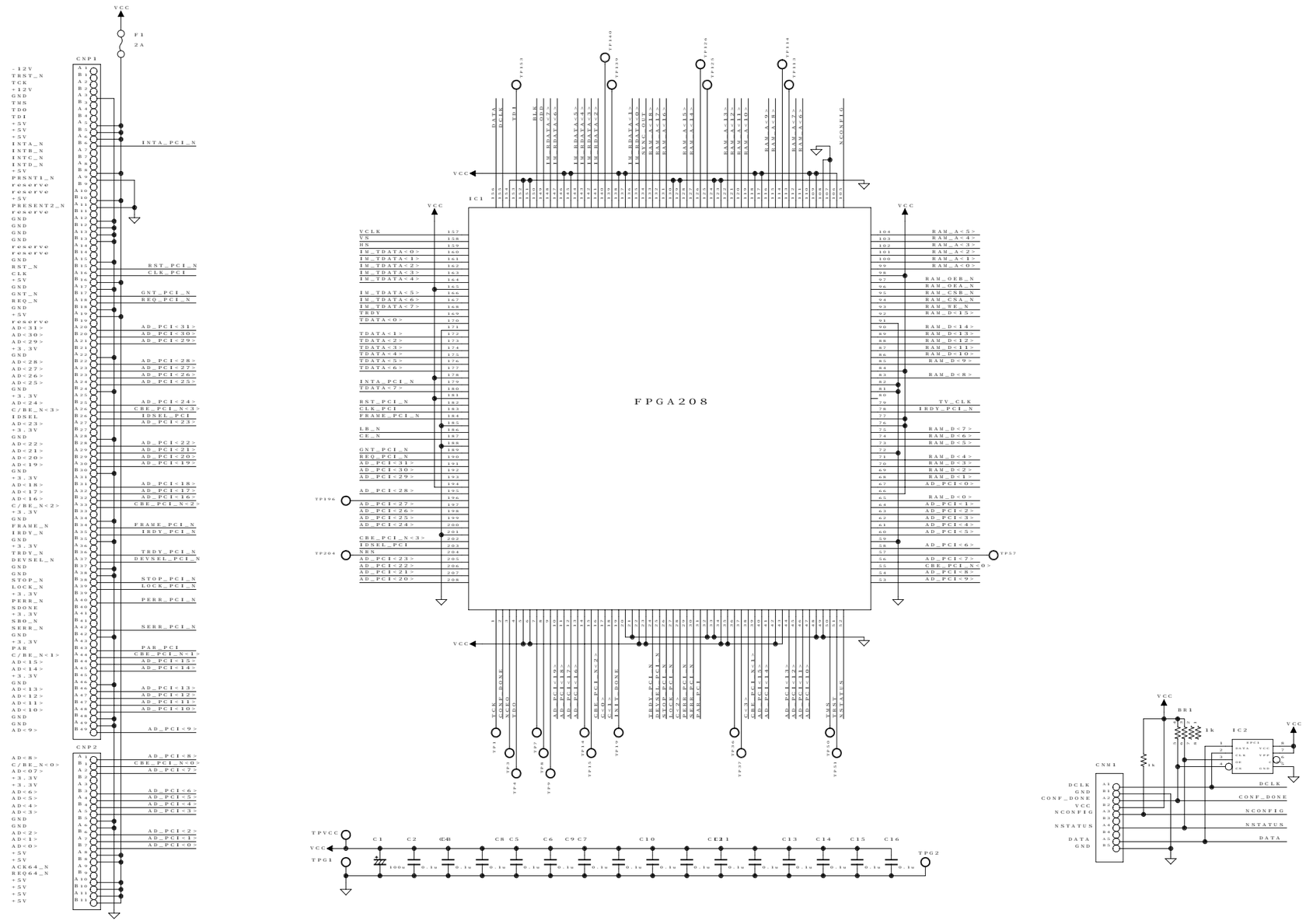

記号	来 歴	年月日	訂 正	審 査	承 認
△					
△					
△					

	署 名	年月日
製図	N.KANEOKA	2000-10-03
審査	K.KAGEYAMA	2000-10-03
承認	S.OOTSUKA	2000-10-03

投影法 | 尺度 : | 名称 (S-5200) TRANSFER P.C.B.

株式会社 日立製作所

計測器グループ図番 321 25378700 | 枚番 1/2 | 訂正 | 入庫

37.TRANSFER P.C.B.(1/2)

25378700

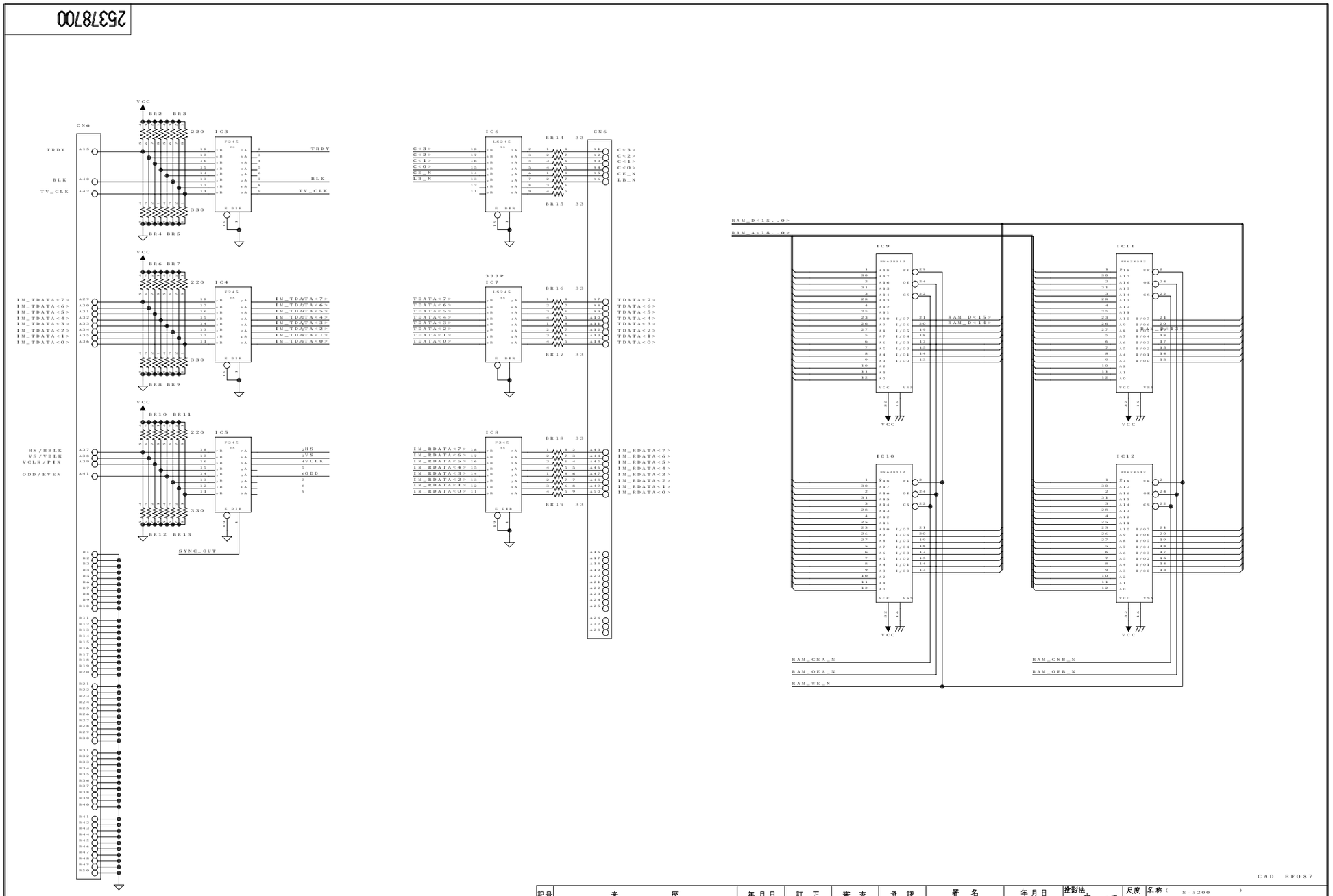

CAD EF087

記号	来歴	年月日	訂正	審査	承認
△					
△					
△					

	署名	年月日
製図	N.KANEOKA	2000 - 10 - 03
審査	K.KAGEYAMA	2000 - 10 - 03
承認	S.OOTSUKA	2000 - 10 - 03

投影法 03 | 尺度 : | 名称 (S-5200) TRANSFER P.C.B.

株式会社 日立製作所

計測器グループ図番 321 25378700 | 枝番 2/2 | 訂正 | 入庫

37.TRANSFER P.C.B.(2/2)

35378715

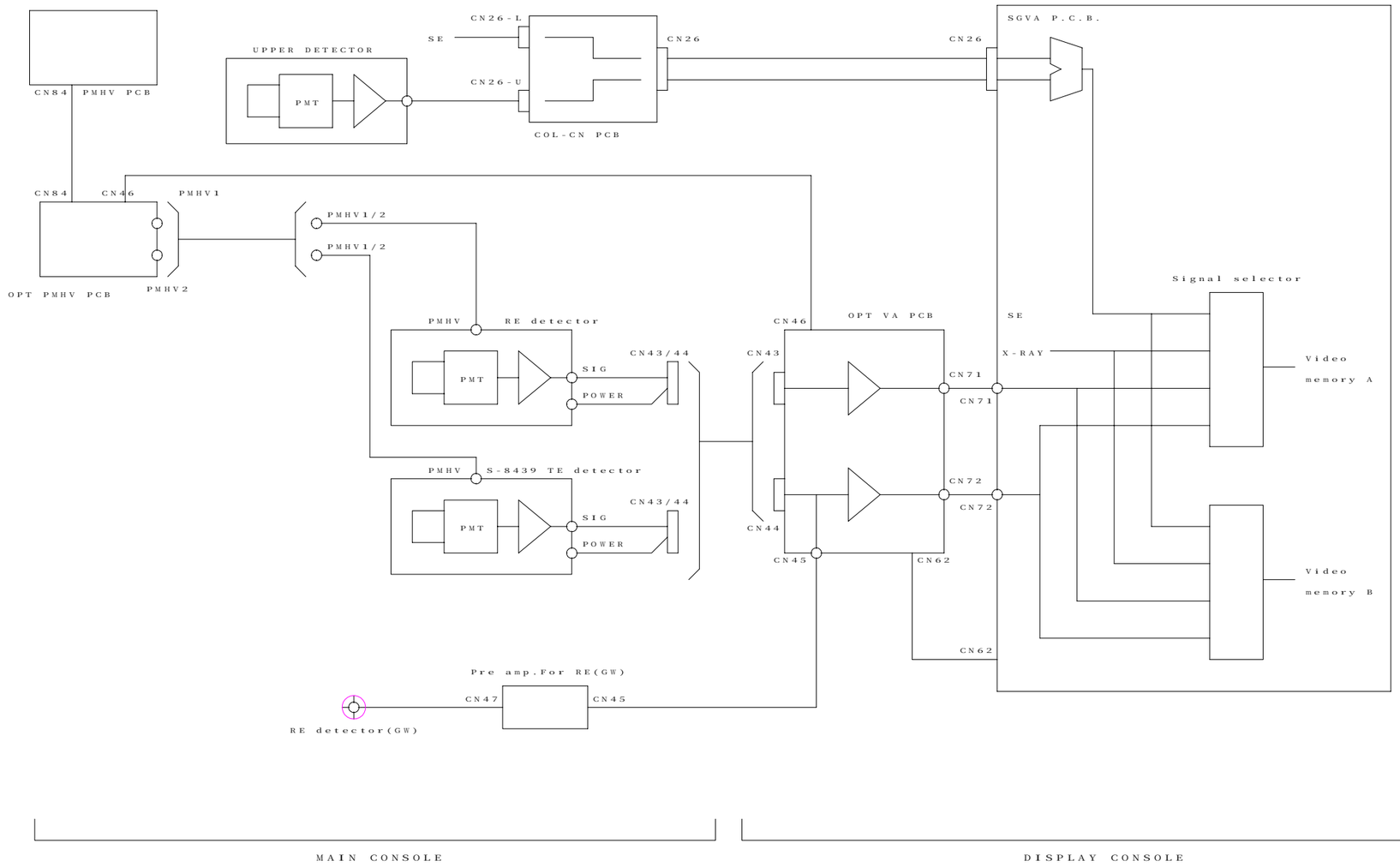

CAD

記号	来　　歴	年月日	訂　正	審　査	承　認
△					
△					
△					

	署　名	年月日
製図	K.KAGEYA	2000-10-21
審査	N.KANEOKA	2000-10-21
承認	S.OOTSUKA	2000-10-21

投影法　尺度 :

名称 (S-4700)
WIRING DIAGRAM
for OPTION DETECTOR

株式会社 日立製作所

計測器グループ図番 321 35378715　枝番 1/1　訂正　入庫

38.WIRING DIAGRAM FOR OPTION DETECTOR

KAIRO

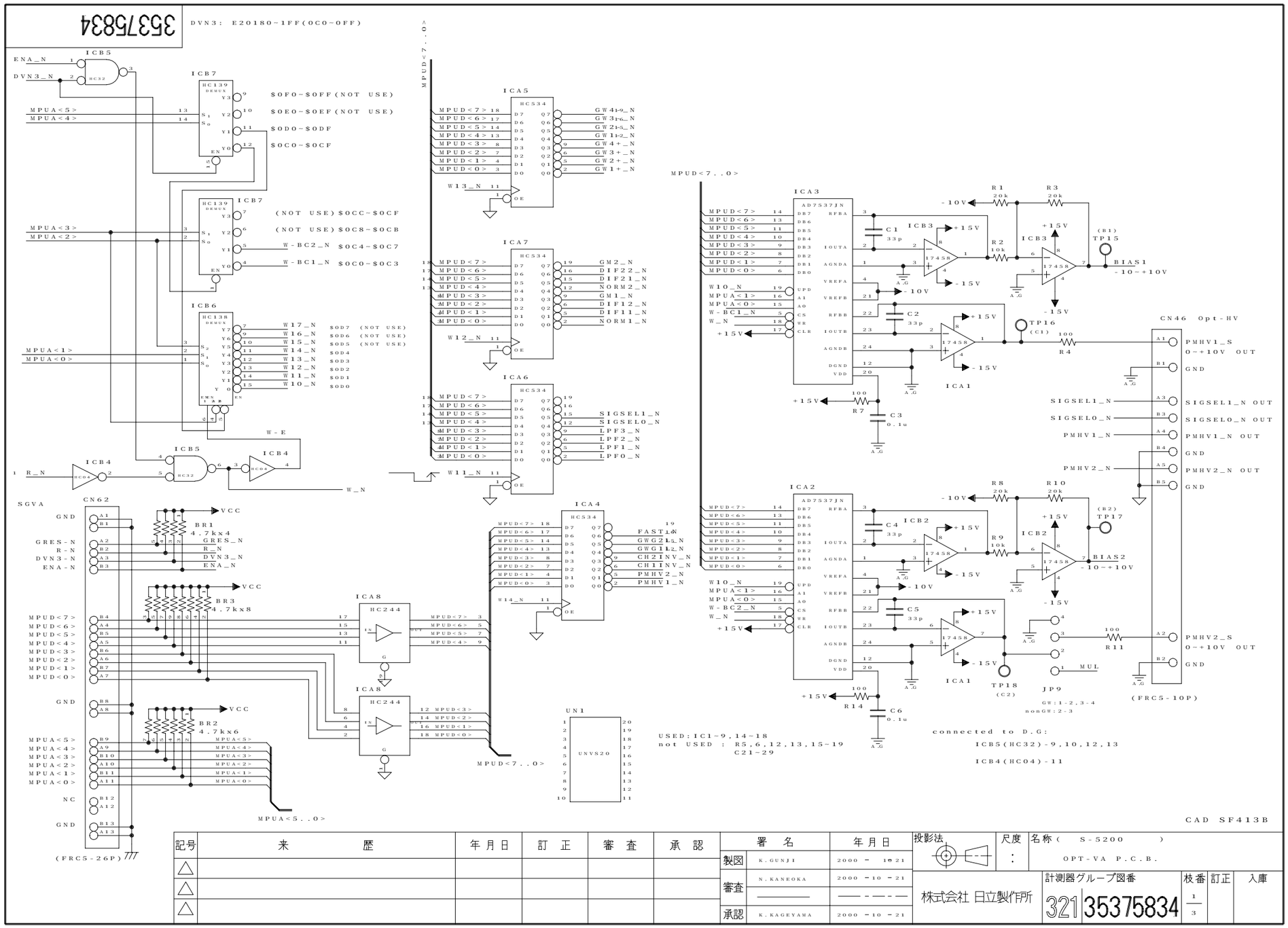

記号	来　　歴	年月日	訂　正	審　査	承　認
△					
△					
△					

	署　名	年月日
製図	K.GUNJI	2000 − 10 21
審査	N.KANEOKA	2000 −10 −21
	————	——−——−——
承認	K.KAGEYAMA	2000 −10 −21

投影法　尺度 :　名称（ S-5200 ）OPT-VA P.C.B.

株式会社 日立製作所

計測器グループ図番 321 35375834　枝番 1/3　訂正　入庫

39.OPT-VA P.C.B.(1/3)

KAIRO

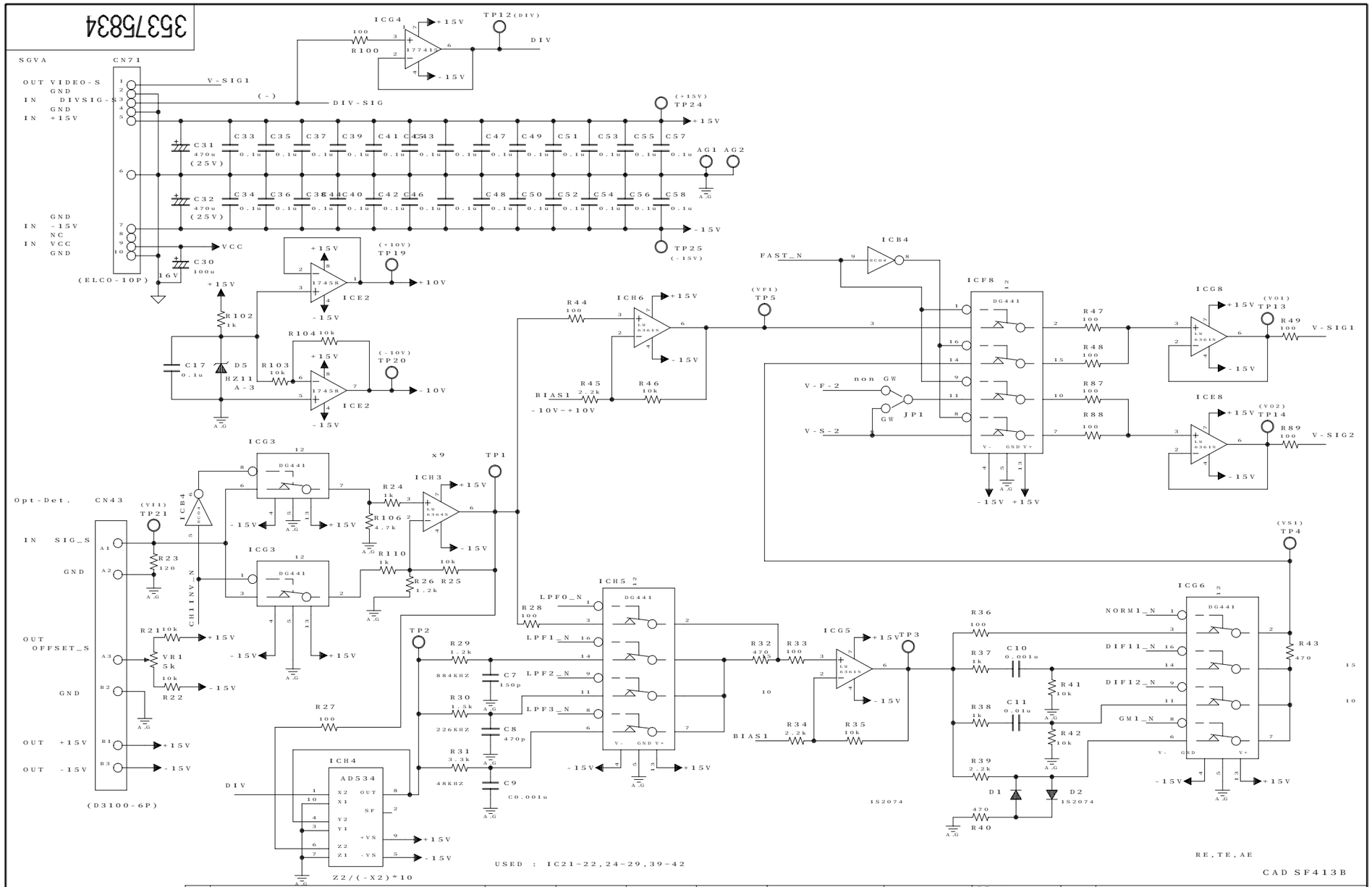

記号	来歴	年月日	訂正	審査	承認
△					
△					
△					

	署名	年月日
製図	K.GUNJI	2000-10-21
審査	N.KANEOKA	2000-10-21
承認	K.KAGEYAMA	2000-10-21

投影法 | 尺度 : | 名称 (S-5200) OPT-VA P.C.B.

株式会社 日立製作所

計測器グループ図番 321 35375834 | 枝番 2/3 | 訂正 | 入庫

39.OPT-VA P.C.B.(2/3)

KAIRO

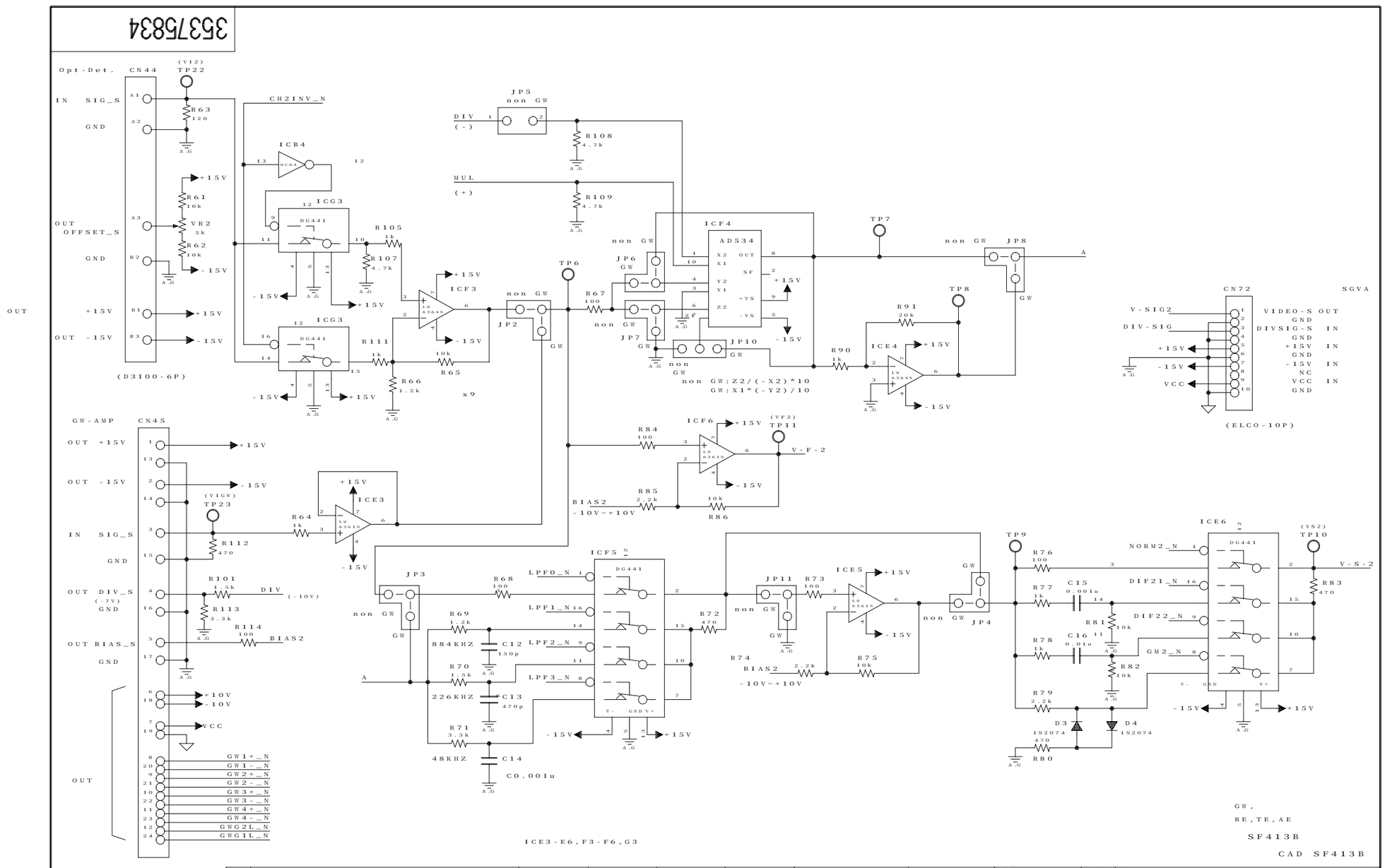

記号	来歴	年月日	訂正	審査	承認
△					
△					
△					

	署名	年月日
製図	K.GUNJI 2000	-10-21
審査	N.KANEOKA	2000-10-21
承認	K.KAGEYAMA	2000-10-21

投影法 | 尺度 : | 名称 (S-5200) OPT-VA P.C.B.

株式会社 日立製作所

計測器グループ図番 321 35375834 | 枝番 3/3 | 訂正 | 入庫

39.OPT-VA P.C.B.(3/3)

KAIRO

35375835

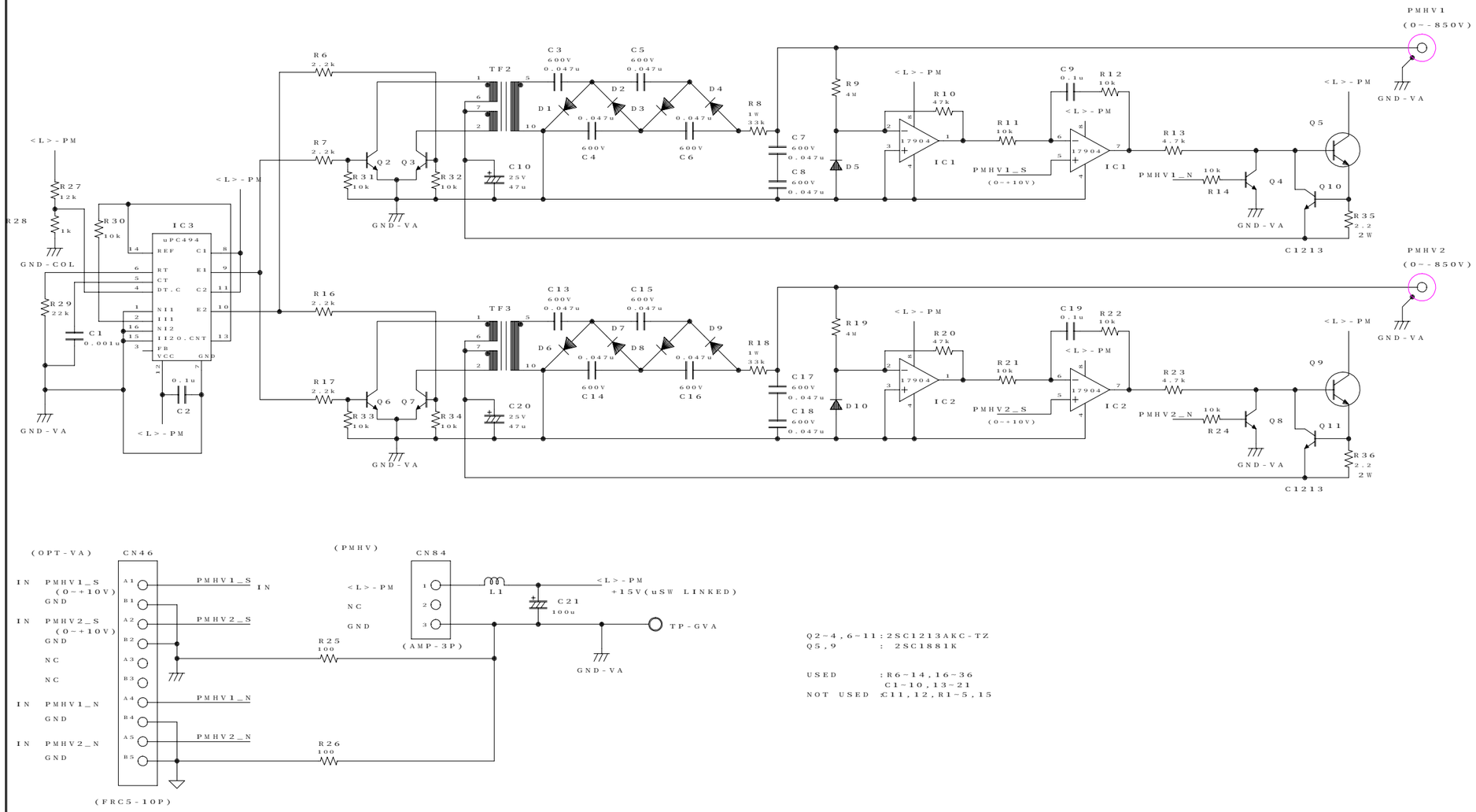

記号	来 歴	年月日	訂 正	審 査	承 認
△					
△					
△					

	署 名	年月日
製図	K.GUNJI 2000	-10 -21
審査	N.KANEOKA	2000 -10 -21
		— - — - —
承認	K.KAGEYAMA	2000 -10 -21

投影法 | 尺度 : | 名称 (S-5200) OPT-PMHV P.C.B.

株式会社 日立製作所

計測器グループ図番 321 35375835 | 枝番 1/1 | 訂正 | 入庫

40.OPT-PMHV P.C.B.

KAIRO

35378706

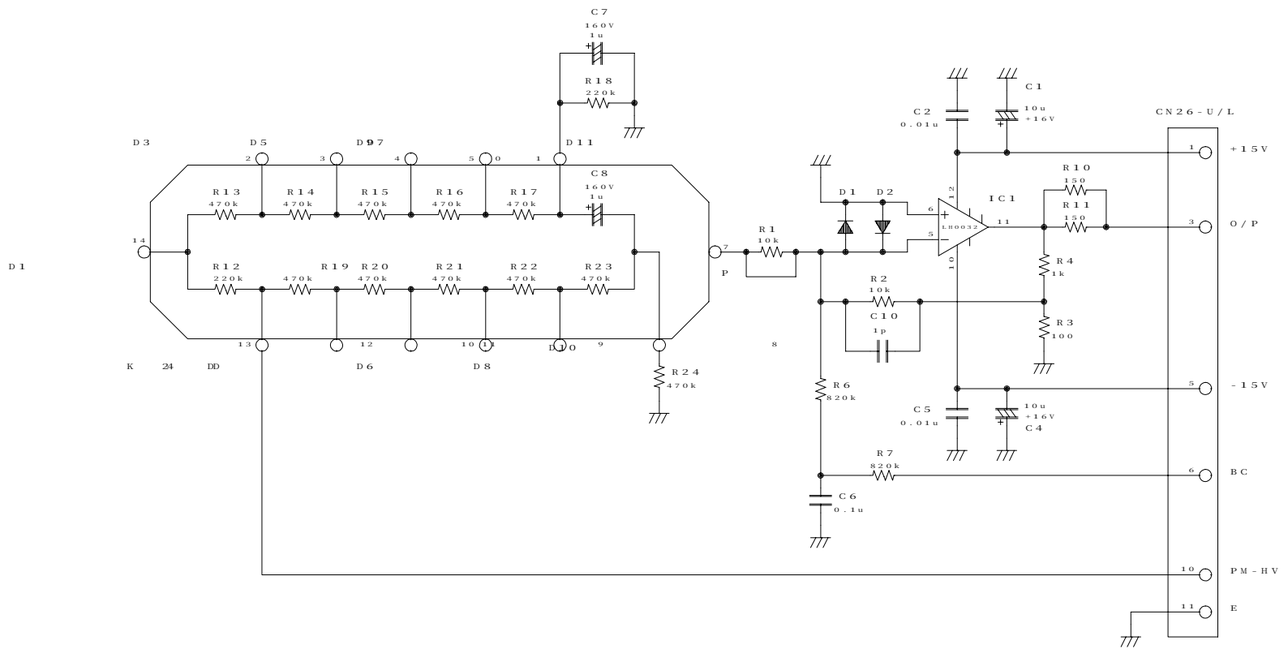

R12,18 220k

R13-R17 470k

R19-R24 470k

11R=2.5M

CAD

記号	来　　歴	年月日	訂　正	審　査	承　認
△					
△					
△					

	署　名	年月日
製図	K.KAGEYAMA	20100-　-21
審査	N.KANEOKA	20100-　-21
	――――	――-――-――
承認	S.OOTUKA	10200-00-21

投影法 UPPER

尺度 1:1

名称（ S-5200 ）
DETECTOR　HEAD AMP P.C.B.

株式会社 日立製作所

計測器グループ図番 321 35378706

枝番 1/1

訂正

入庫

KAIRO

41.UPPER DETECTOR HEAD AMP P.C.B.

25378716

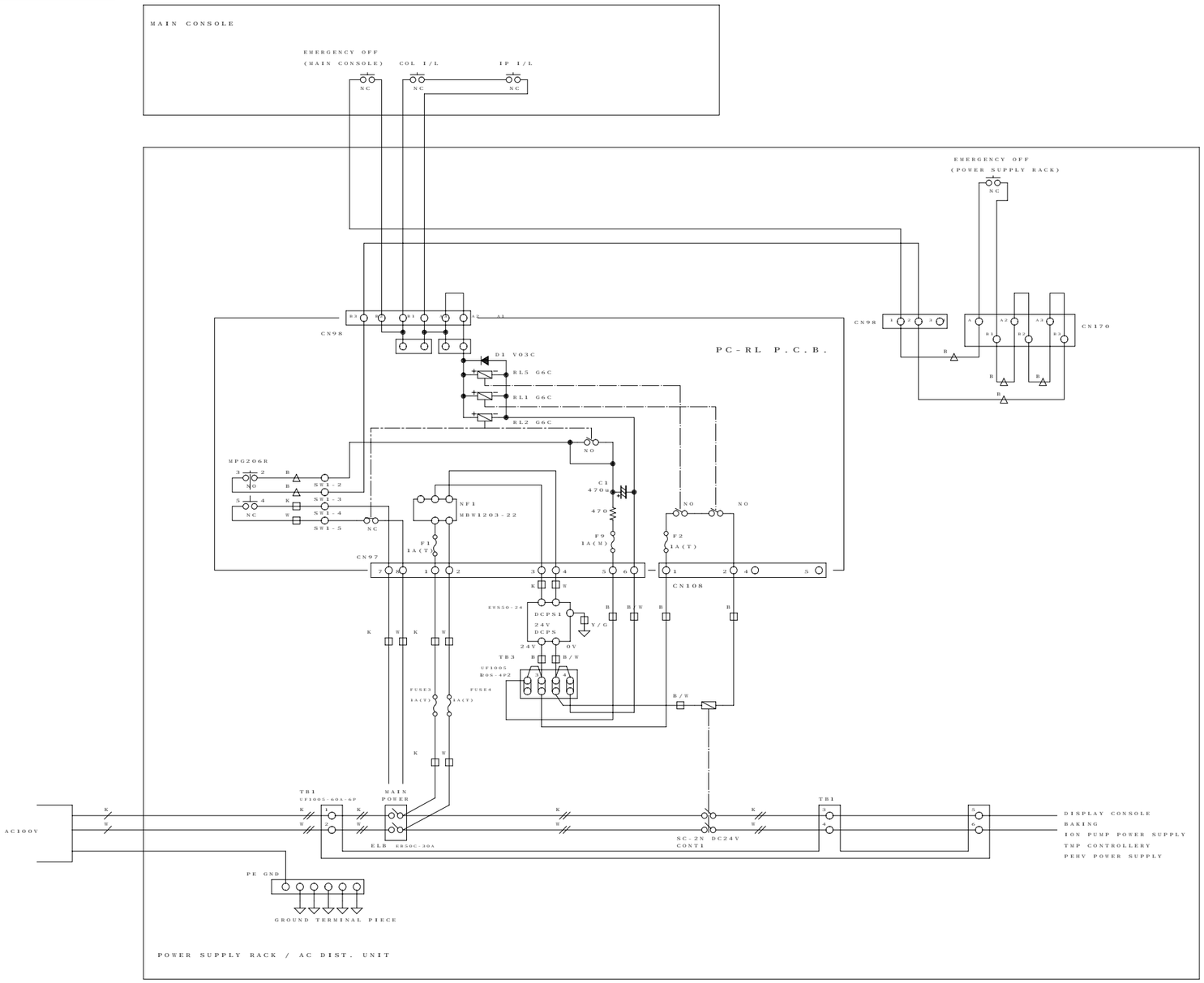

CAD

記号	来歴	年月日	訂正	審査	承認
△					
△					
△					

	署名	年月日
製図	A.MOURI	2000"10"21
審査	N.KANEOKA	2000"10"21
承認	K.KAGEYAMA	2000"10"21

投影法 | 尺度 : | 名称 (S-5200) EMO PROTECTION WIRING

株式会社 日立製作所

計測器グループ図番 321 25378716 | 枝番 1/2 | 訂正 | 入庫

42.EMO PROTECTION WIRING(1/2)

25378716

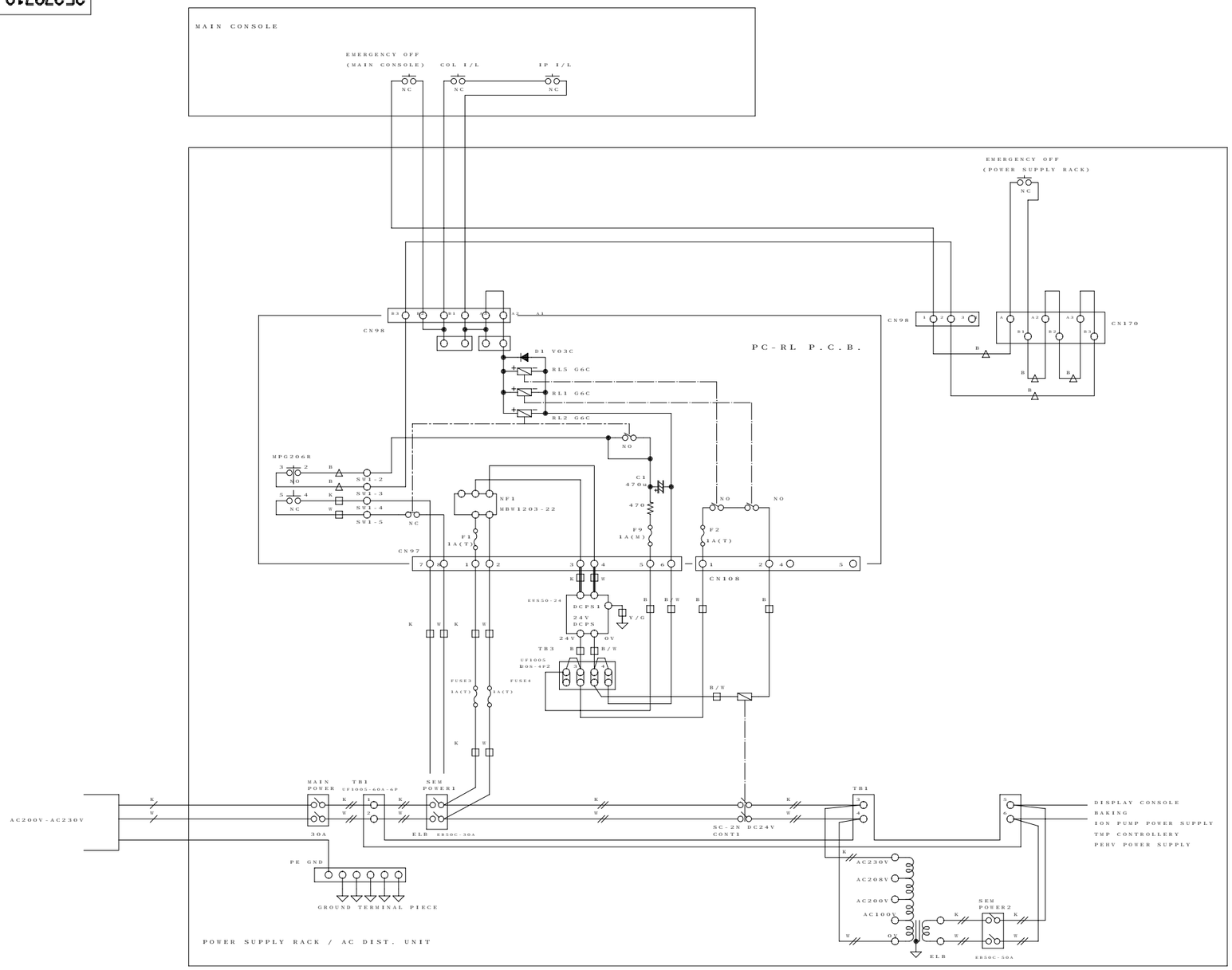

CAD

記号	来　　歴	年月日	訂　正	審　査	承　認
△					
△					
△					

	署　名	年月日
製図	A.MOURI	2000-10-21
審査	N.KANEOKA	2000-10-21
	――――	―― - ― - ―
承認	K.KAGEYAMA	2000-10-21

投影法　尺度 :

名称（ S-5200 ）
EMO PROTECTION WIRING
(S2/CE TYPE)

株式会社 日立製作所

計測器グループ図番 321 25378716

枝番 2/2　訂正　入庫

42.EMO PROTECTION WIRING(S2/CE TYPE)(2/2)

25378717

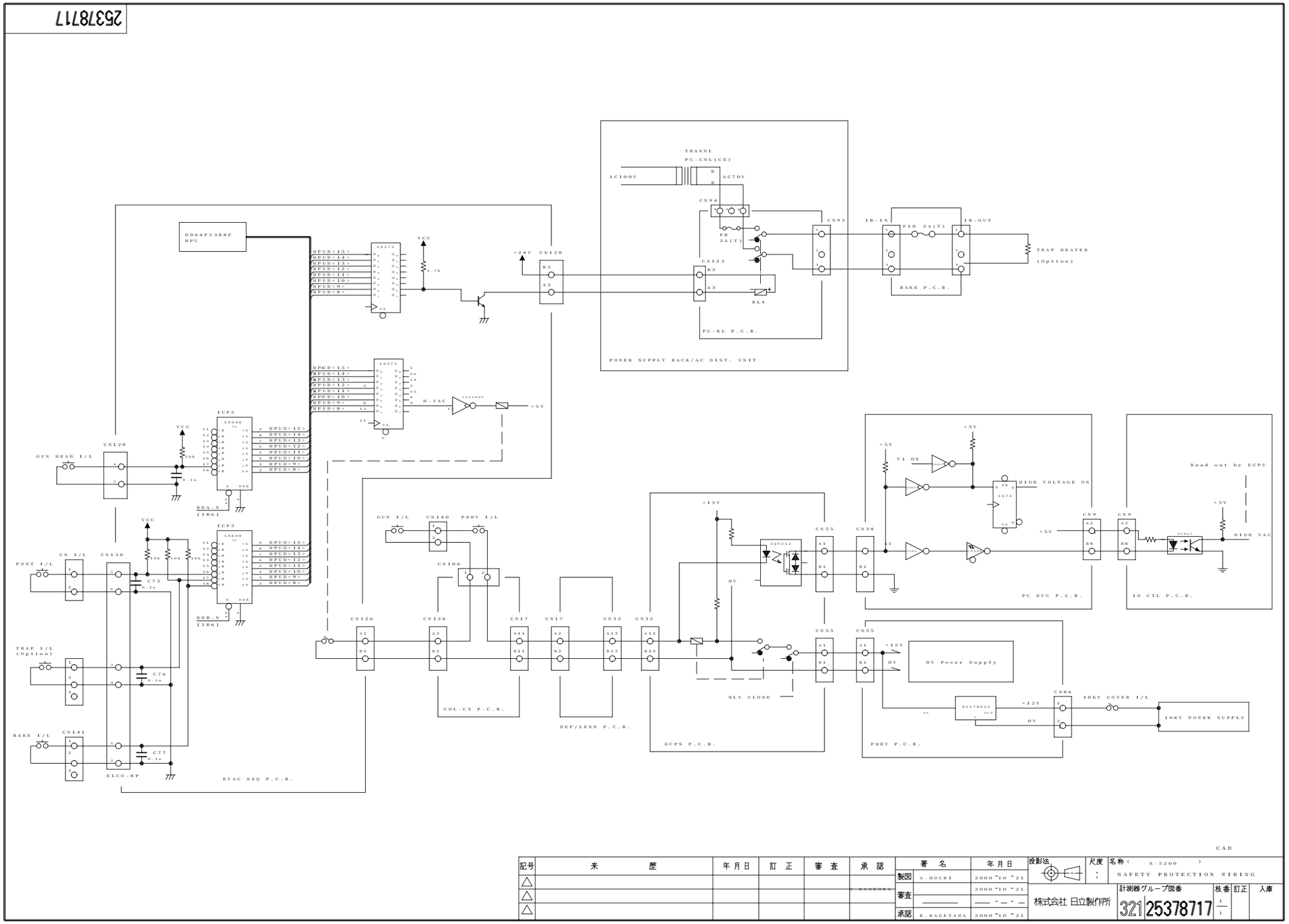

記号	来　　歴	年月日	訂　正	審　査	承　認
△					K.KANEOKA
△					
△					

	署　名	年月日
製図	A.MOURI	2000-10-21
審査	————	——-—-—
承認	K.KAGEYAMA	2000-10-21

投影法　尺度 :　名称（ S-5200 ）

SAFETY PROTECTION WIRING

株式会社 日立製作所

計測器グループ図番 321 25378717　枝番 1/1　訂正　入庫

43.SAFETY PROTECTION WIRING

25378718

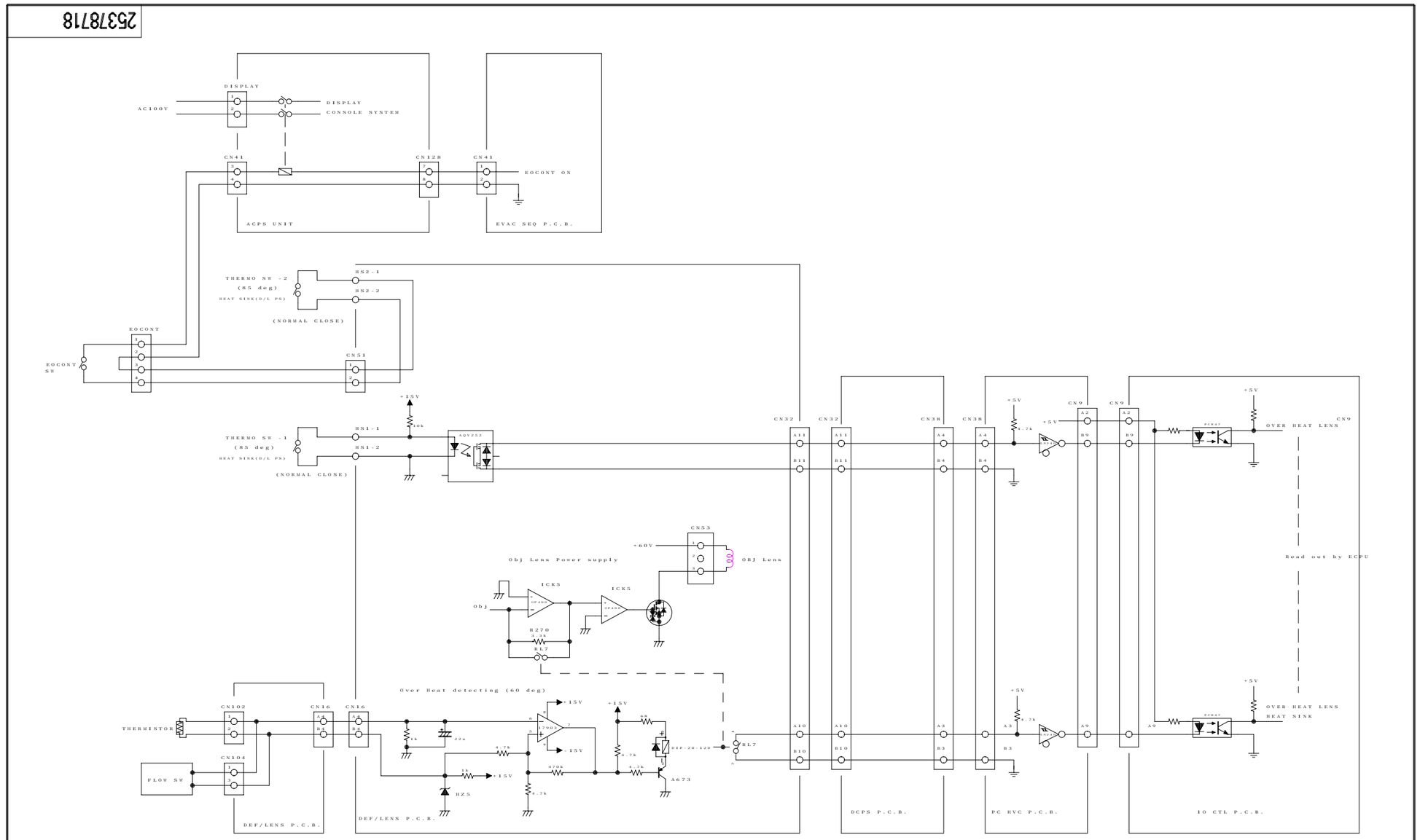

記号	来 歴	年月日	訂 正	審 査	承 認
△					
△					
△					

	署 名	年月日
製図	A.MOURI	2000"10"21
審査	N.KANEOKA	2000"10"21
承認	K.KAGEYAMA	2000"10"21

投影法 | 尺度 : | 名称 (S-5200) TEMP. PROTECTION WIRING

株式会社 日立製作所

計測器グループ図番 321 25378718 | 枝番 1/1 | 訂正 | 入庫

44.TEMP. PROTECTION WIRING