SCHEMATIC DIAGRAMS

FOR

MODEL S-4000 FIELD EMISSION SCANNING ELECTRON MICROSCOPE

Copyright © Hitachi, Ltd. 1989.
All rights reserved.
Printed in Japan.

Part No. 589-8500-2 KT-M(GT-NK92252)

TABLE OF CONTENTS

1. GROUND WIRING
2. WIRING DIAGRAM
3. POWER DISTRIBUTER
4. DC POWER SUPPLY P.C.B. (1/2~2/2)
5. CPU/IO P.C.B. (1/5~5/5)
6. SG/VA P.C.B. (1/6~6/6)
7. IMEM-01 P.C.B. (1/2~2/2)
8. IMEM-03 P.C.B. (1/2~2/2) (OPTION)
9. PANEL P.C.B.
10. DEF/LENS POWER SUPPLY P.C.B. (1/6~6/6)
11. PM HV P.C.B.
12. BEAM MONITOR PRE AMP
13. HV POWER SUPPLY
14. 10K HV POWER SUPPLY
15. PHOTO CRT UNIT
16. HR P.C.B.
17. EVAC SEQUENCE WIRING DIAGAM
18. EVAC SEQUENCE P.C.B.
19. EVAC PANEL P. C. B.
20. COLUMN CN P.C.B.
21. ION PUMP POWER SUPPLY
22. ION PUMP CONTROL
23. HEAD AMP
24. S-6509 RASTER ROTATION/DYNAMIC FOCUS UNIT
25. S-6541 DUAL PMHV UNIT
26. S-6542 PRE AMP UNIT
27. S-8040 UNIVERSAL VIDEO AMP UNIT (1/2~2/2)

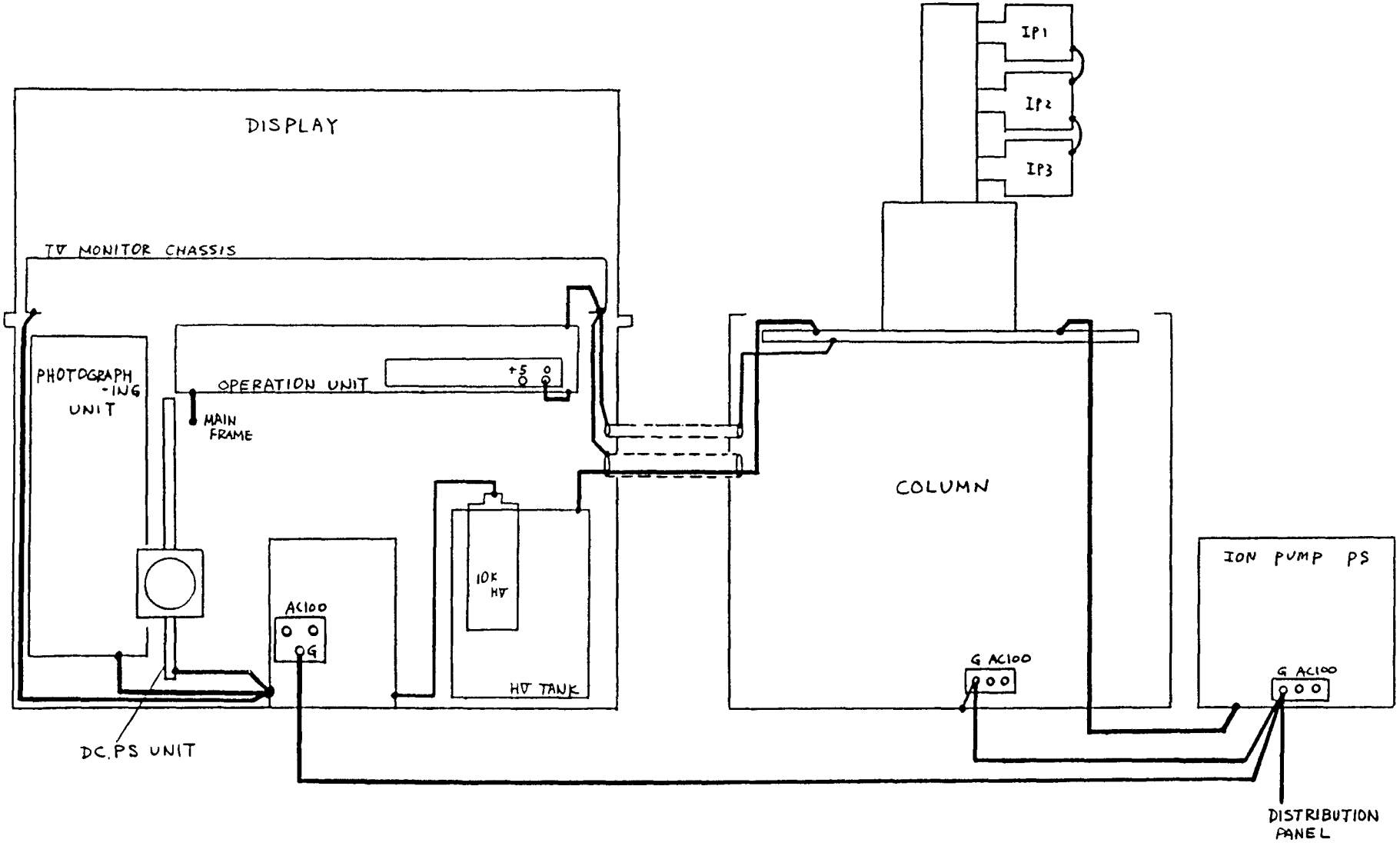

1. GROUND WIRING

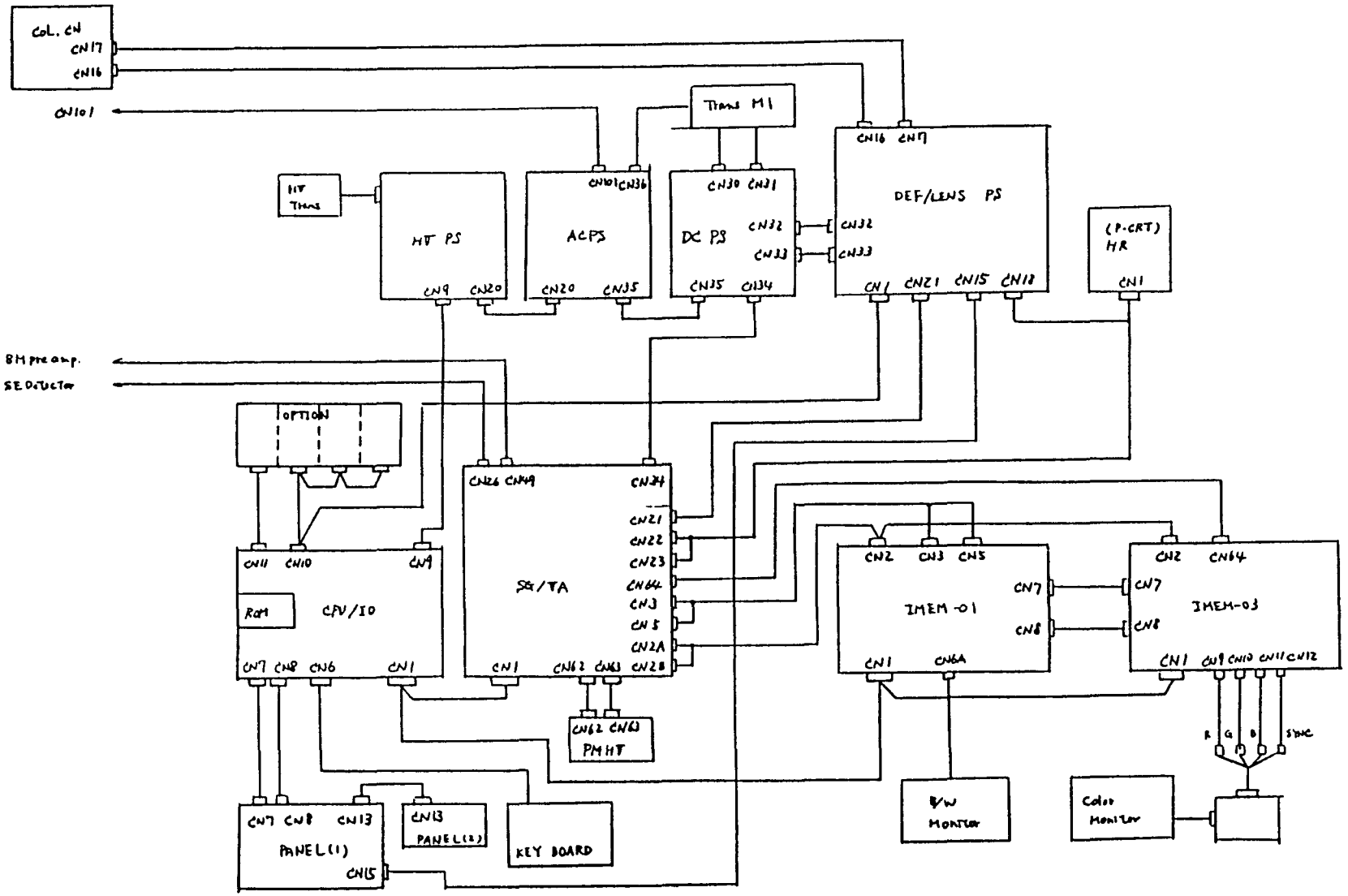

2. WIRING DIAGRAM

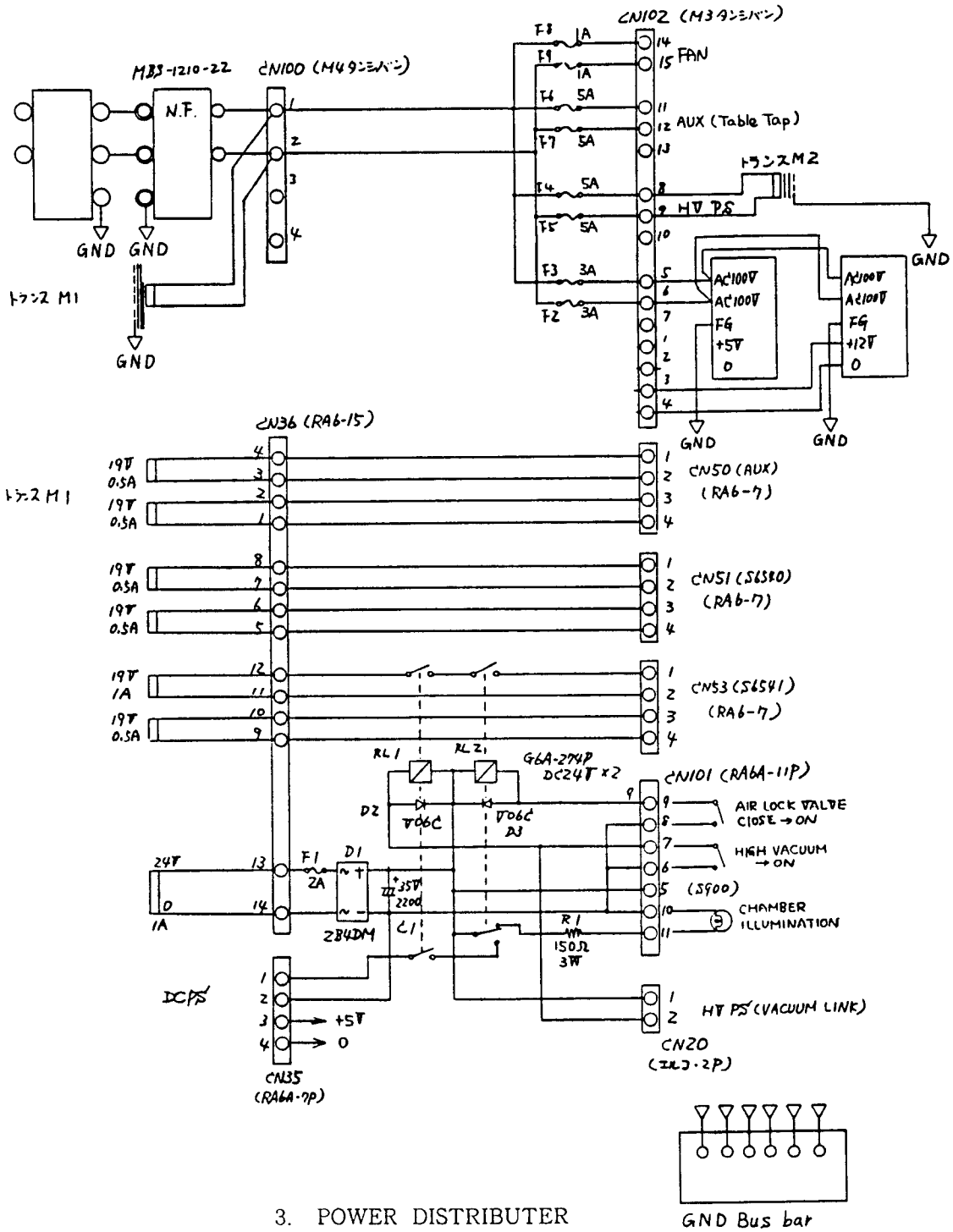

3. POWER DISTRIBUTER

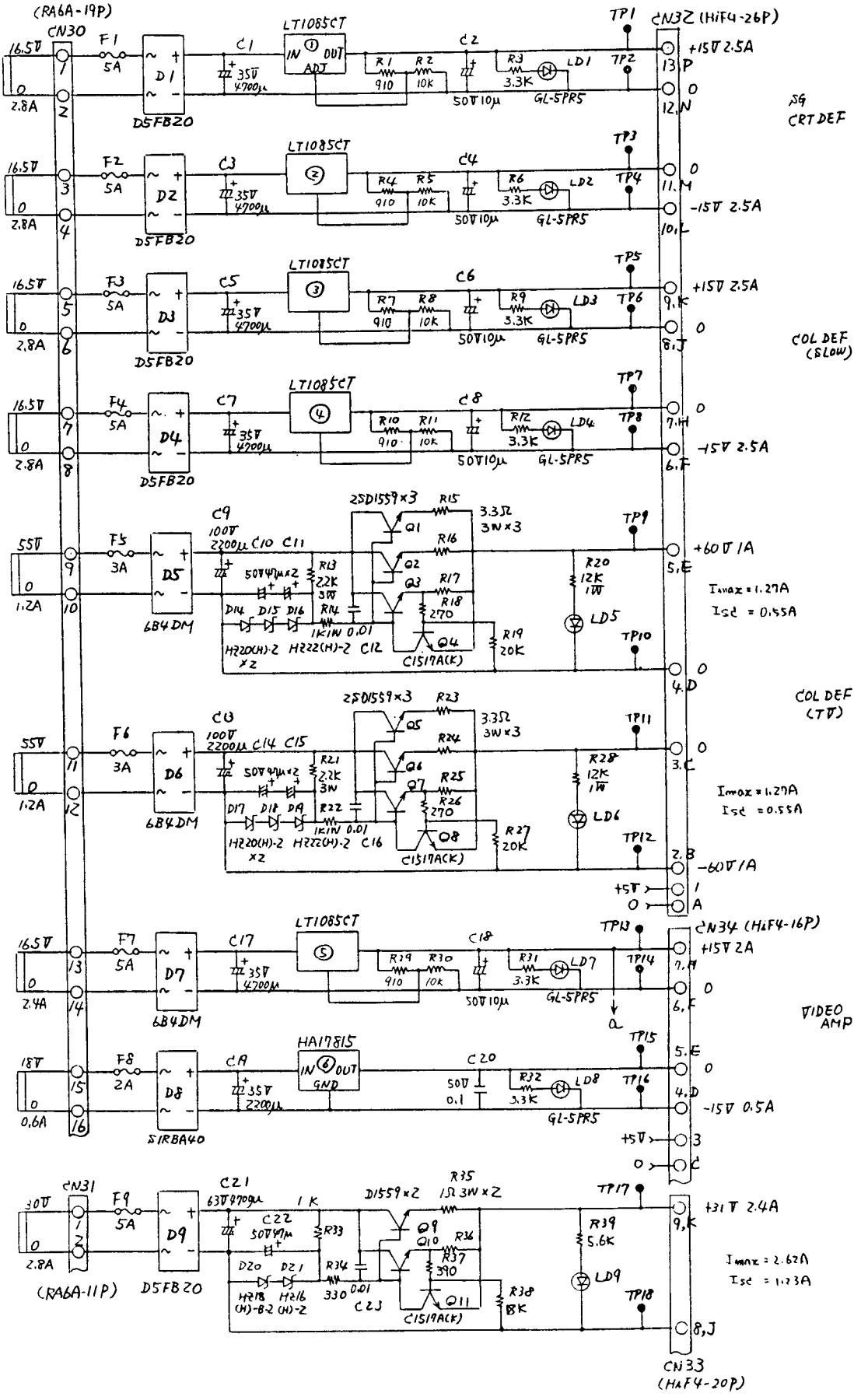

4. DC POWER SUPPLY P. C. B. (1/2)

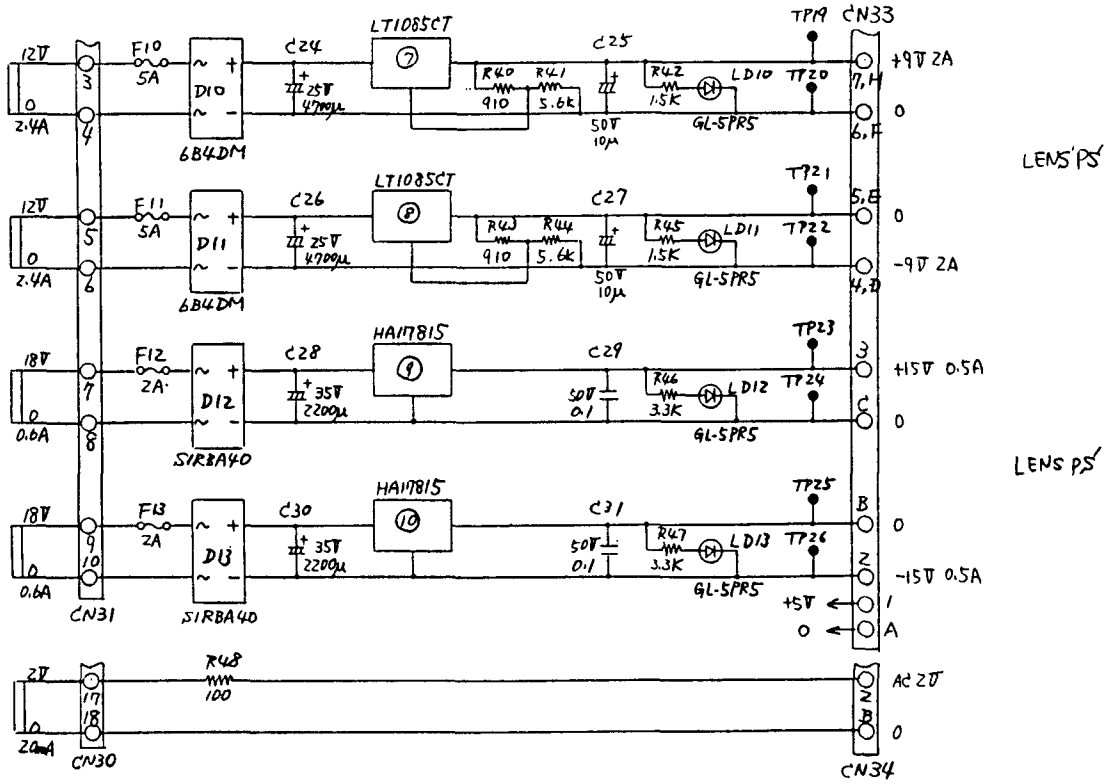

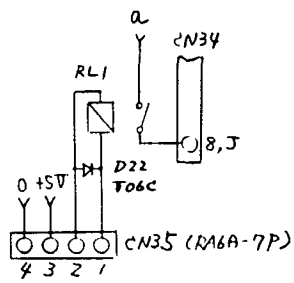

4. DC POWER SUPPLY P. C. B. (2/2)

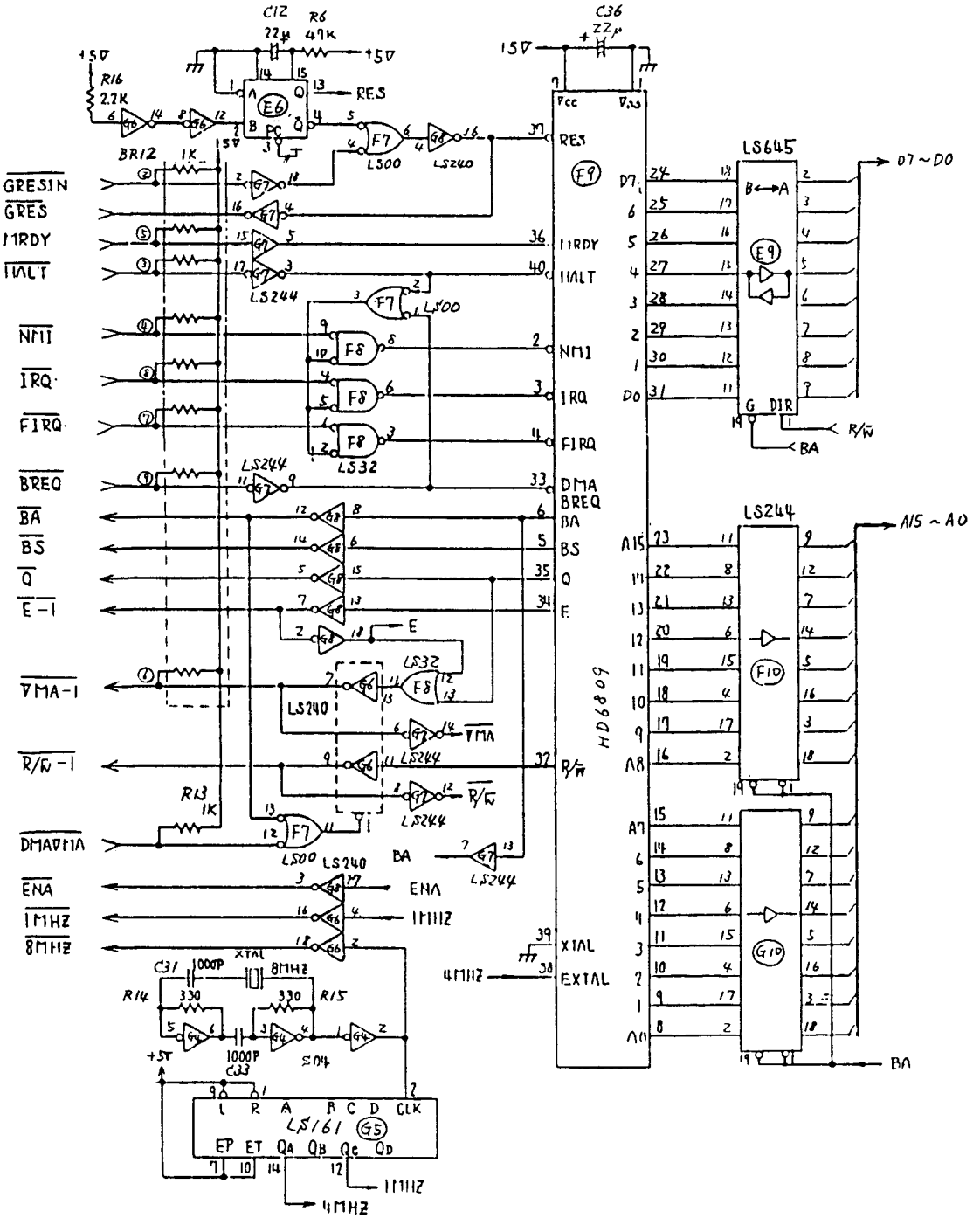

5. CPU/IO P. C. B. (1/5)

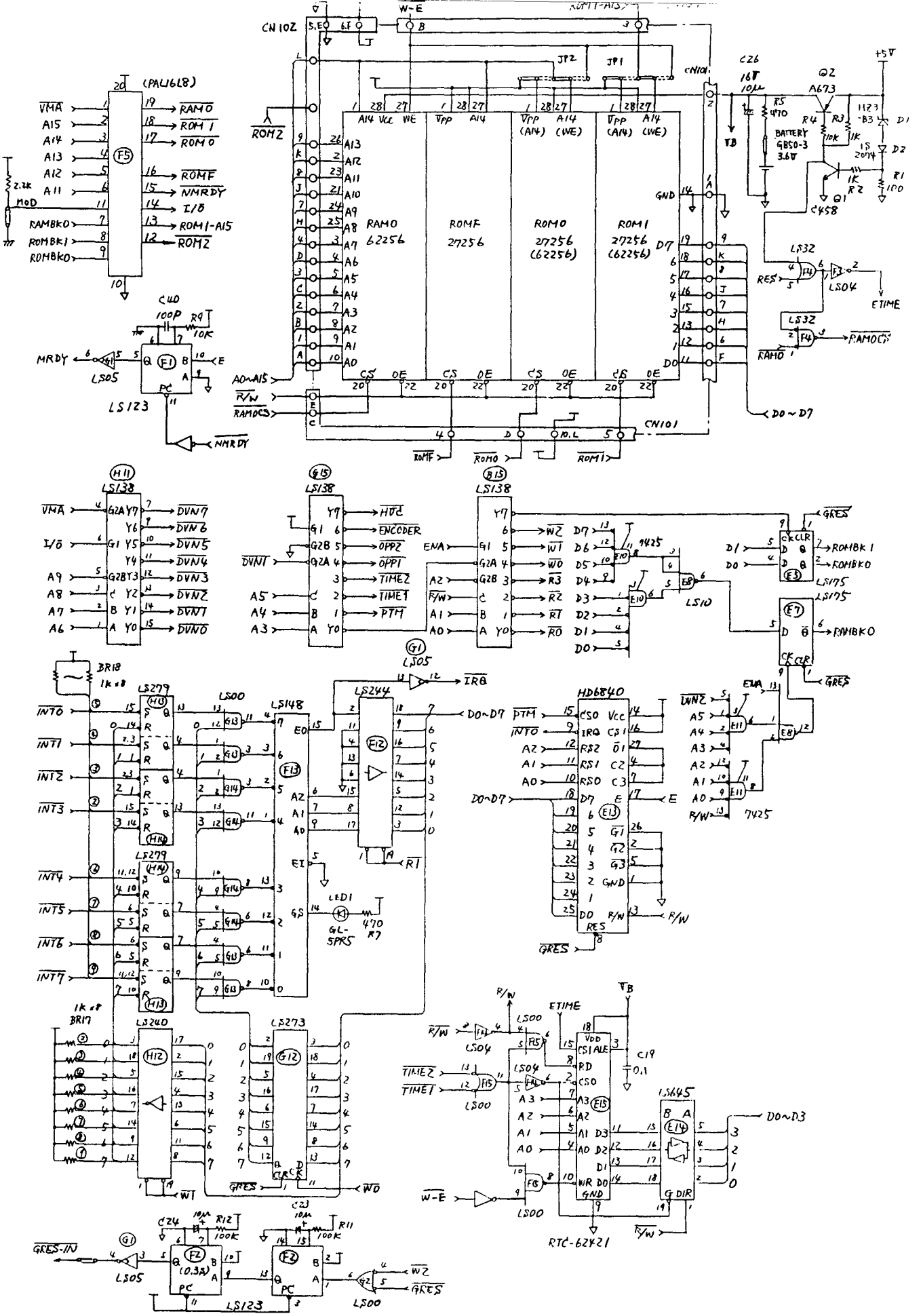

5. CPU／IO P. C. B. (2／5)

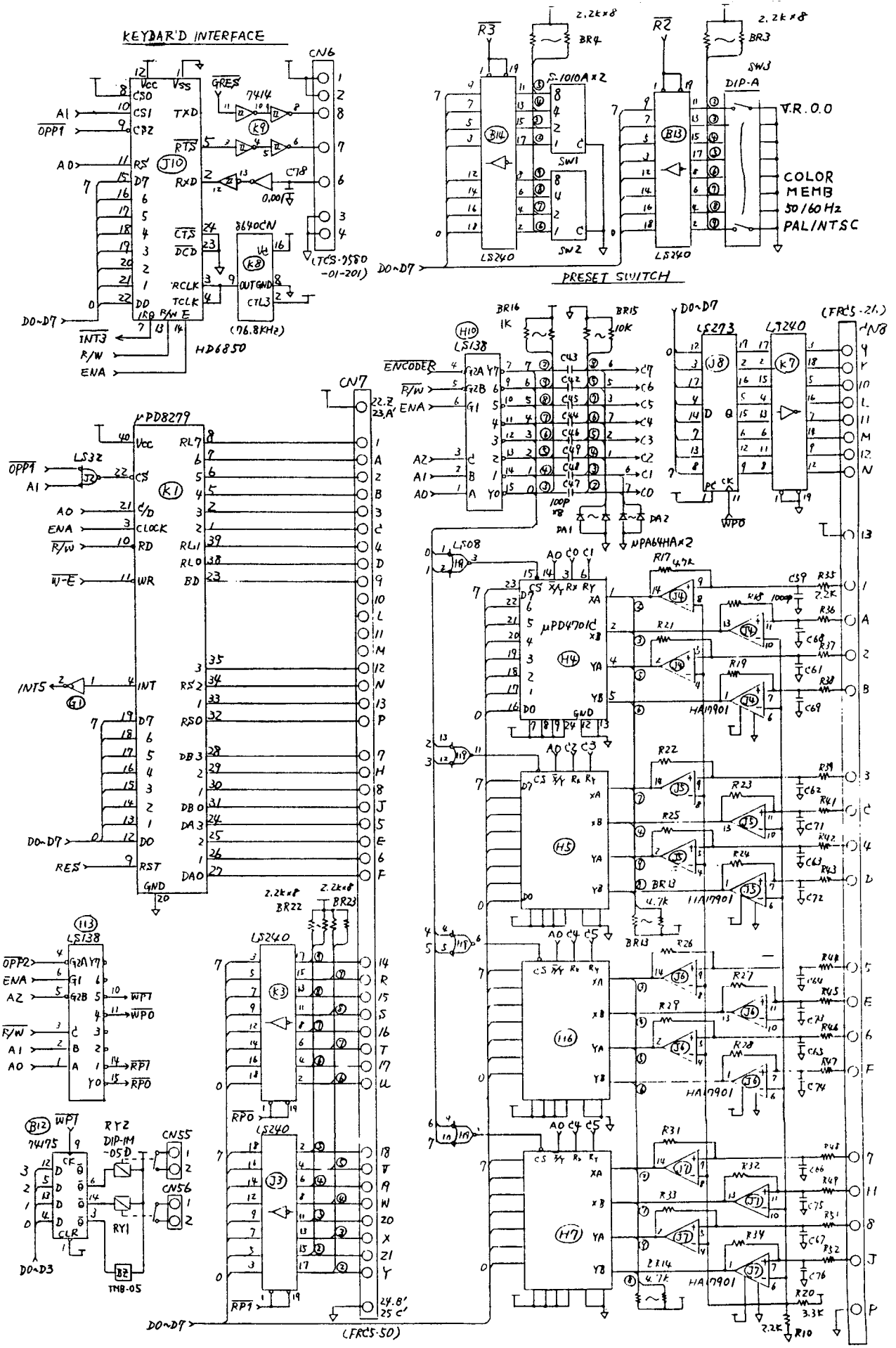

5. CPU／IO P. C. B. (3／5)

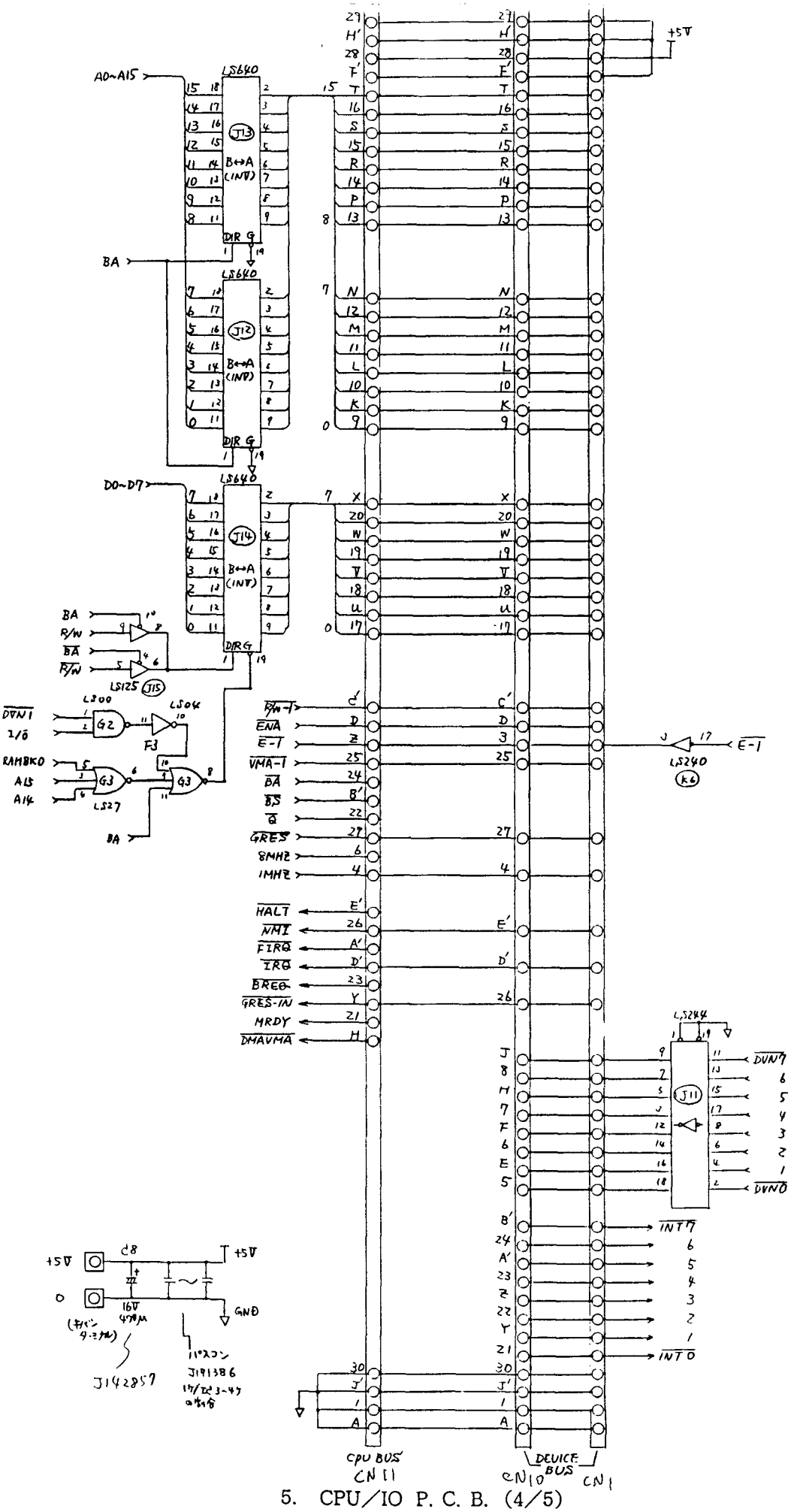

5. CPU/IO P. C. B. (4/5)

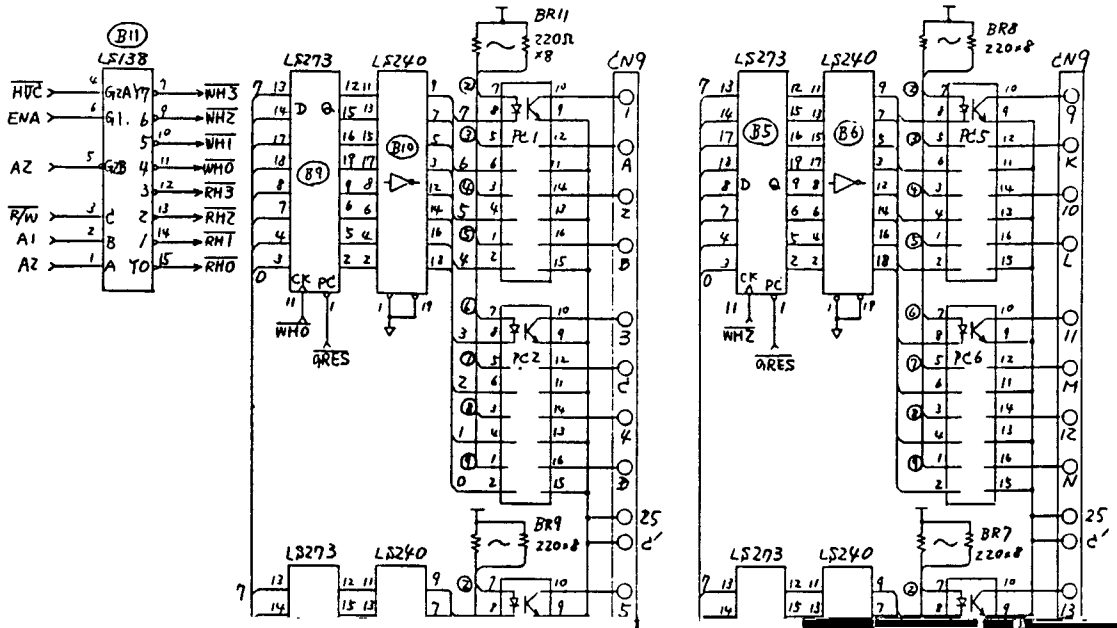
B11
LS138
HVC
ENA
AZ
R/W
A1
A2
WH3
WH2
WH1
WH0
RH3
RH2
RH1
RH0
LS273
LS240
B9
B10
WH0
ORES
BR11
220Ω
×8
PC1
PC2
CN9
BR9
220×8
B5
B6
WH2
PC5
PC6
BR8
220×8
BR7
220×8

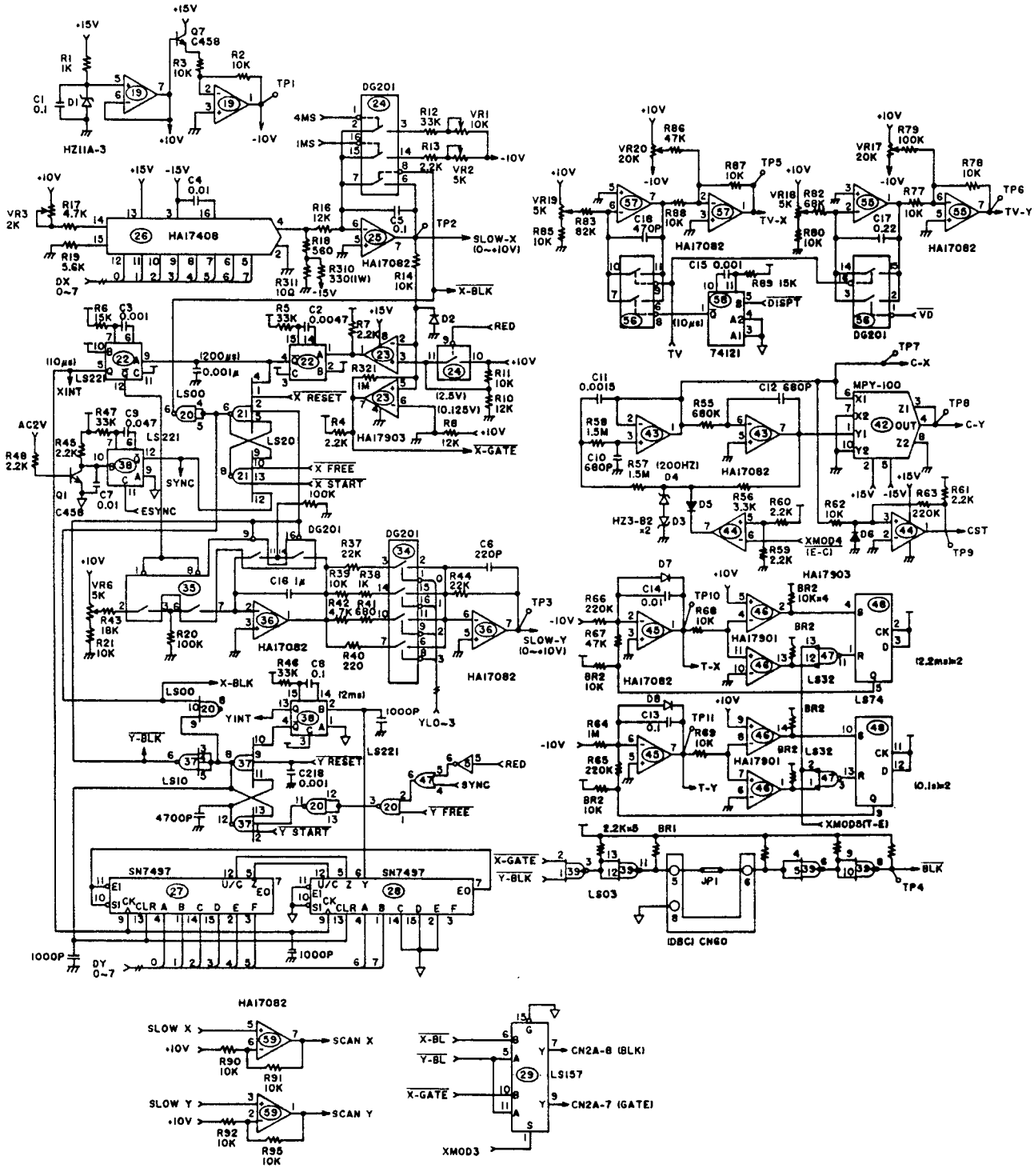
HZ11A-3
HA17408
DG201
HA17082
HA17903
LS00
LS20
LS221
LS10
LS32
LS74
LS157
LS03
SN7497
MPY-100
HA17901
74121
CN60
JP1
SLOW-X (0~+10V)
SLOW-Y (0~+10V)
X-GATE
X-BLK
Y-BLK
X RESET
X FREE
X START
Y RESET
Y FREE
ESYNC
SYNC
DISPT
TV-X
TV-Y
C-X
C-Y
CST
XMOD4 (E-C)
XMOD5 (T-E)
XMOD3
SCAN X
SCAN Y
CN2A-8 (BLK)
CN2A-7 (GATE)
BLK
DX 0~7
DY 0~7
YLO~3

6. SG/VA P. C. B. (1/6)

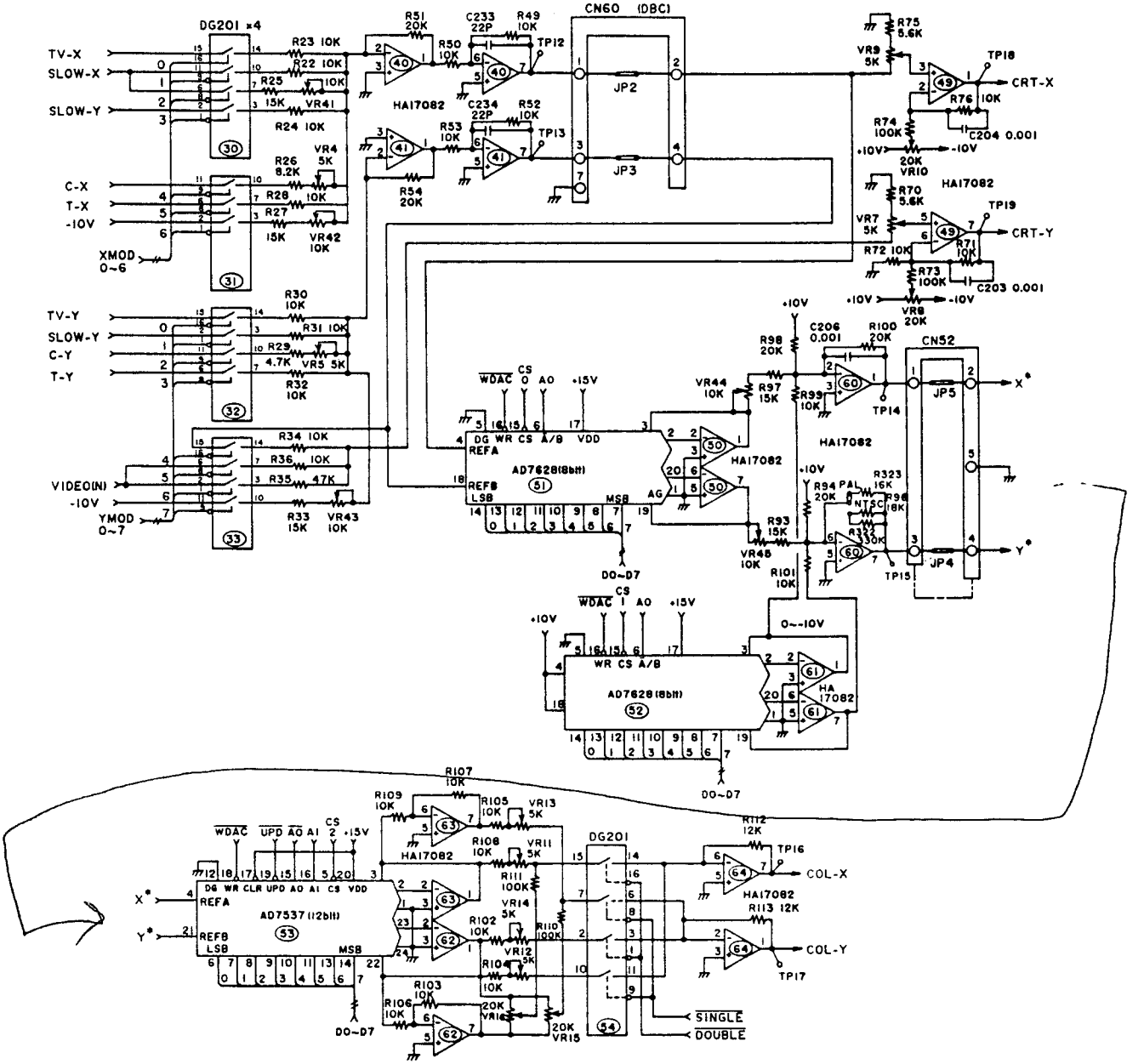
DG201 ×4
TV-X
SLOW-X
SLOW-Y
C-X
T-X
-10V
XMOD 0~6
TV-Y
SLOW-Y
C-Y
T-Y
VIDEO(IN)
-10V
YMOD 0~7
CN60 (DBC)
JP2
JP3
HA17082
AD7628(8bit)
DO~D7
CRT-X
CRT-Y
CN52
JP5
JP4
AD7537(12bit)
DG201
COL-X
COL-Y
SINGLE
DOUBLE

6. SG/VA P. C. B. (2/6)

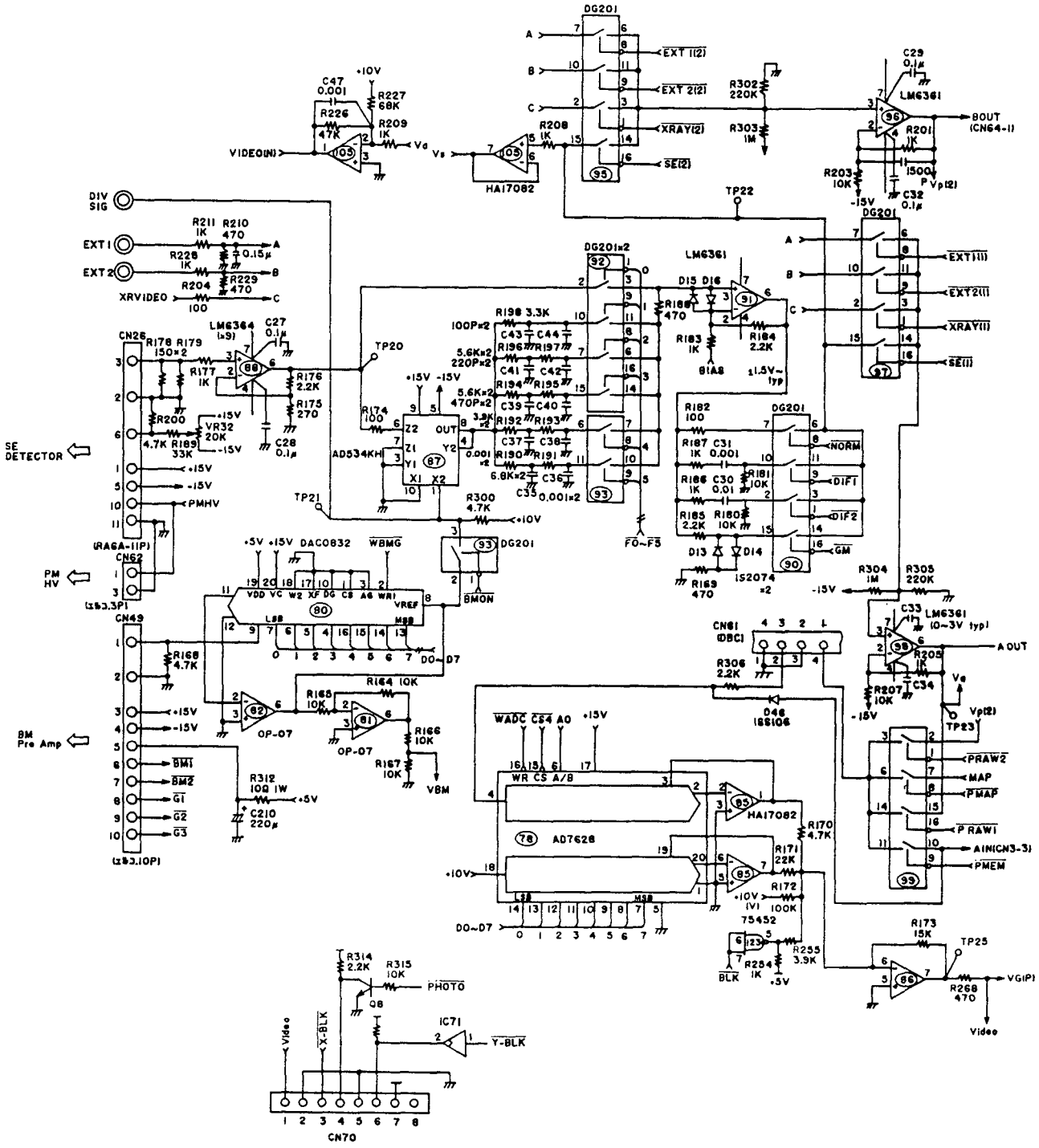
DG201
EXT 1(2)
EXT 2(2)
XRAY(2)
SE(2)
LM6361
BOUT (CN64-1)
VIDEO(IN)
HA17082
DIV SIG
EXT1
EXT2
XRVIDEO
CN26
(RAGA-11P)
SE DETECTOR
PM HV
CN62
(2S3.3P)
CN49
(2S3.10P)
BM Pre Amp
LM6364
AD534KH
TP20
TP21
TP22
TP23
TP25
DG201×2
F0~F5
NORM
DIF1
DIF2
GM
IS2074
DAC0832
WBMG
BMON
OP-07
VBM
CN61 (DBC)
D46 1SS106
A OUT
PRAW2
MAP
PMAP
PRAW1
AIN(CN3-3)
PMEM
AD7628
HA17082
75452
BLK
VG(P)
Video
PHOTO
Q8
IC71
Y-BLK
X-BLK
CN70

6. SG/VA P. C. B. (3/6)

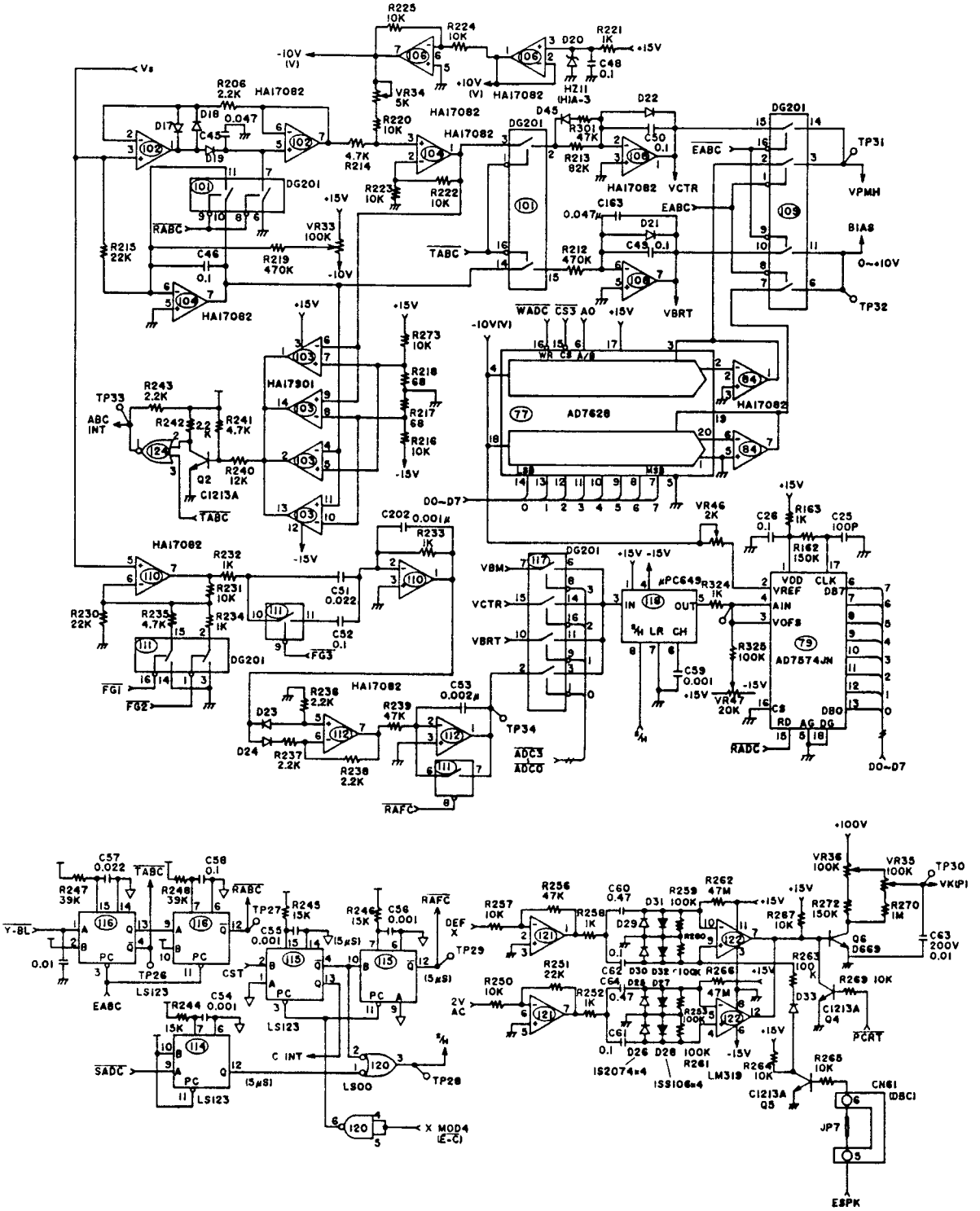
R225 10K
R224 10K
R221 1K
+15V
-10V (V)
+10V (V)
HA17082
D20
HZ11 (HIA-3)
C48 0.1
VR34 5K
R220 10K
Vs
R206 2.2K
D18
0.047
D17
C45
D19
4.7K R214
R223 10K
R222 10K
DG201
D45
R301 47K
D22
C50 0.1
R213 82K
VCTR
TP31
VPMH
BIAS
0~+10V
TP32
EABC
C163 0.047μ
D21
C49 0.1
R212 470K
VBRT
TABC
RABC
R215 22K
C46 0.1
R219 470K
VR33 100K
HA17901
R273 10K
R218 68
R217 68
R216 10K
TP33
ABC INT
R243 2.2K
R242 22K
R241 4.7K
R240 12K
Q2 C1213A
WADC CS3 A0
AD7628
D0~D7
VR46 2K
C26 0.1
R163 1K
C25 100P
R162 150K
C202 0.001μ
R233 1K
R232 1K
R231 10K
R230 22K
R235 4.7K
R234 1K
C51 0.022
C52 0.1
FG3
FG1
FG2
VBM
VCTR
VBRT
μPC649
R324 1K
R325 100K
VR47 20K
C59 0.001
AD7574JN
RADC
R236 2.2K
D23
D24
R237 2.2K
R238 2.2K
R239 47K
C53 0.002μ
TP34
ADC3
ADC0
RAFC
C57 0.022
C58 0.1
R247 39K
R248 39K
Y-BL
0.01
TP26
LS123
EABC
TP27
R245 15K
C55 0.001
CST
R246 15K
C56 0.001
DEF X
TP29
(5μS)
R244 15K
C54 0.001
SADC
C INT
LS00
TP28
X MOD4 (E-C)
R257 10K
R256 47K
R258 1K
C60 0.47
D29
R259 100K
R262 47M
R267 10K
R272 150K
+100V
VR36 100K
VR35 100K
TP30
VK(P)
R270 1M
C63 200V 0.01
Q6 D669
2V AC
R250 10K
R251 22K
R252 1K
C62 0.47
C64
C61 0.1
D30 D32
D26 D28
R253 100K
R261 100K
R266 47M
R263 100K
R269 10K
D33
C1213A Q4
PCRT
IS2074×4
IS106×4
LM319
R264 10K
R265 10K
C1213A Q5
CN61 (DBC)
JP7
ESPK

6. SG/VA P. C. B. (4/6)

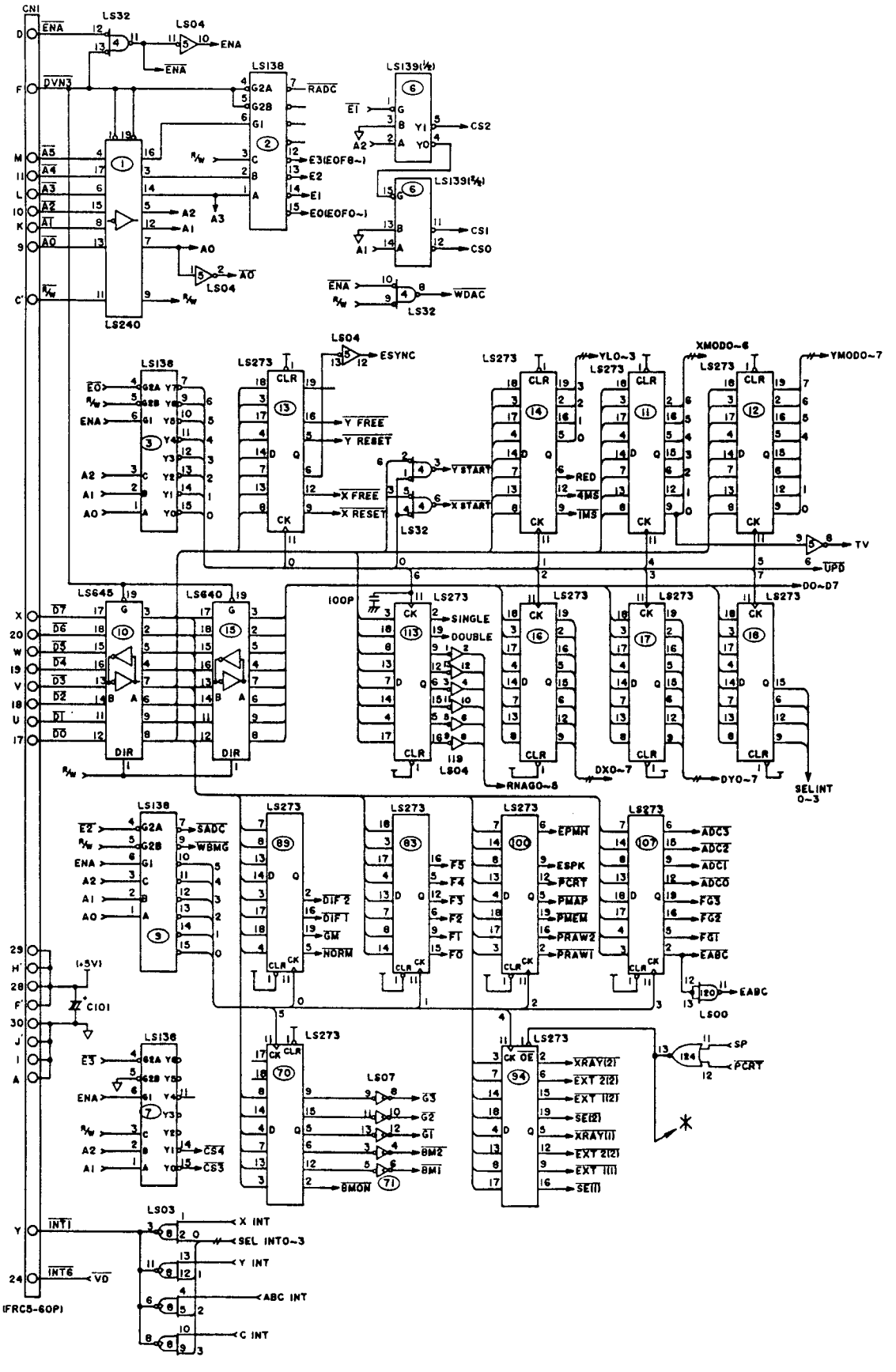
CN1
LS32
LS04
ENA
DVN3
LS138
LS139(1/2)
RADC
CS2
CS1
CS0
E3(EOF8~)
E2
E1
E0(EOF0~)
A5
A4
A3
A2
A1
A0
LS240
WDAC
ESYNC
LS273
Y FREE
Y RESET
X FREE
X RESET
Y START
X START
YLO~3
XMODO~6
YMODO~7
RED
4MS
1MS
TV
UPD
D0~D7
LS645
LS640
100P
SINGLE
DOUBLE
RNAGO~8
DX0~7
DY0~7
SELINT 0~3
SADC
WBMG
DIF2
DIF1
GM
NORM
F5
F4
F3
F2
F1
F0
EPMH
ESPK
PCRT
PMAP
PMEM
PRAW2
PRAW1
ADC3
ADC2
ADC1
ADC0
FG3
FG2
FG1
EABC
LS00
(+5V)
C101
CS4
CS3
LS07
G3
G2
G1
BM2
BM1
BMON
XRAY(2)
EXT 2(2)
EXT 1(2)
SE(2)
XRAY(1)
EXT 2(1)
EXT 1(1)
SE(1)
SP
PCRT
LS03
INT1
INT6
VD
X INT
SEL INT0~3
Y INT
ABC INT
C INT
(FRC5-60P)

6. SG/VA P. C. B. (5/6)

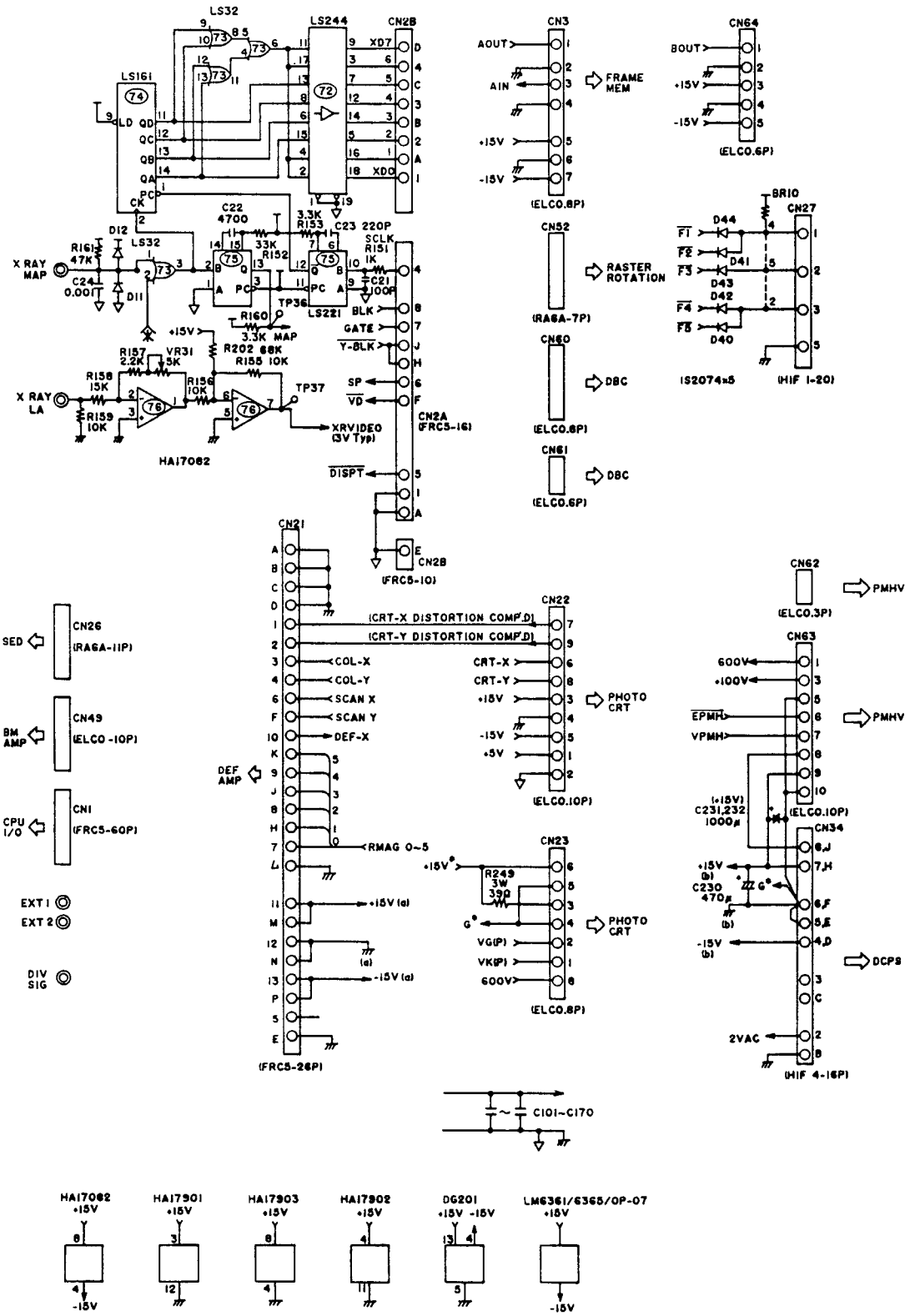
LS32
LS244
CN2B
LS161
XD7
XD0
CN3
AOUT
AIN
FRAME MEM
(ELCO.8P)
CN64
BOUT
(ELCO.6P)
C22 4700
3.3K R153
C23 220P
33K R152
SCLK
R151 1K
C21 100P
LS221
TP36
BLK
GATE
Y-BLK
R160 3.3K MAP
+15V
R202 68K
R155 10K
R157 2.2K
VR31 5K
R158 15K
R156 10K
R159 10K
TP37
SP
VD
XRVIDEO (3V Typ)
HA17062
DISPT
CN2A (FRC5-16)
CN2B (FRC5-10)
X RAY MAP
X RAY LA
R161 47K
C24 0.001
D12
D11
CN52
(RA6A-7P)
RASTER ROTATION
CN60
DBC
(ELCO.8P)
CN61
DBC
(ELCO.6P)
BR10
CN27
D44
D41
D43
D42
D40
(S2074×5
(HIF 1-20)
CN21
(FRC5-26P)
CN22
(CRT-X DISTORTION COMP'D)
(CRT-Y DISTORTION COMP'D)
COL-X
COL-Y
SCAN X
SCAN Y
DEF-X
RMAG 0~5
DEF AMP
CRT-X
CRT-Y
+15V
-15V
+5V
PHOTO CRT
(ELCO.10P)
CN23
R249 3W 390
VG(P)
VK(P)
600V
(ELCO.8P)
CN62
(ELCO.3P)
PMHV
CN63
600V
+100V
EPMH
VPMH
(ELCO.10P)
C231,232 1000μ
CN34
C230 470μ
2VAC
(HIF 4-16P)
DCPS
SED
CN26
(RA6A-11P)
BM AMP
CN49
(ELCO-10P)
CPU I/O
CN1
(FRC5-60P)
EXT 1
EXT 2
DIV SIG
C101~C170
HA17062
HA17901
HA17903
HA17902
DG201
LM6361/6365/OP-07

6. SG/VA P. C. B. (6/6)

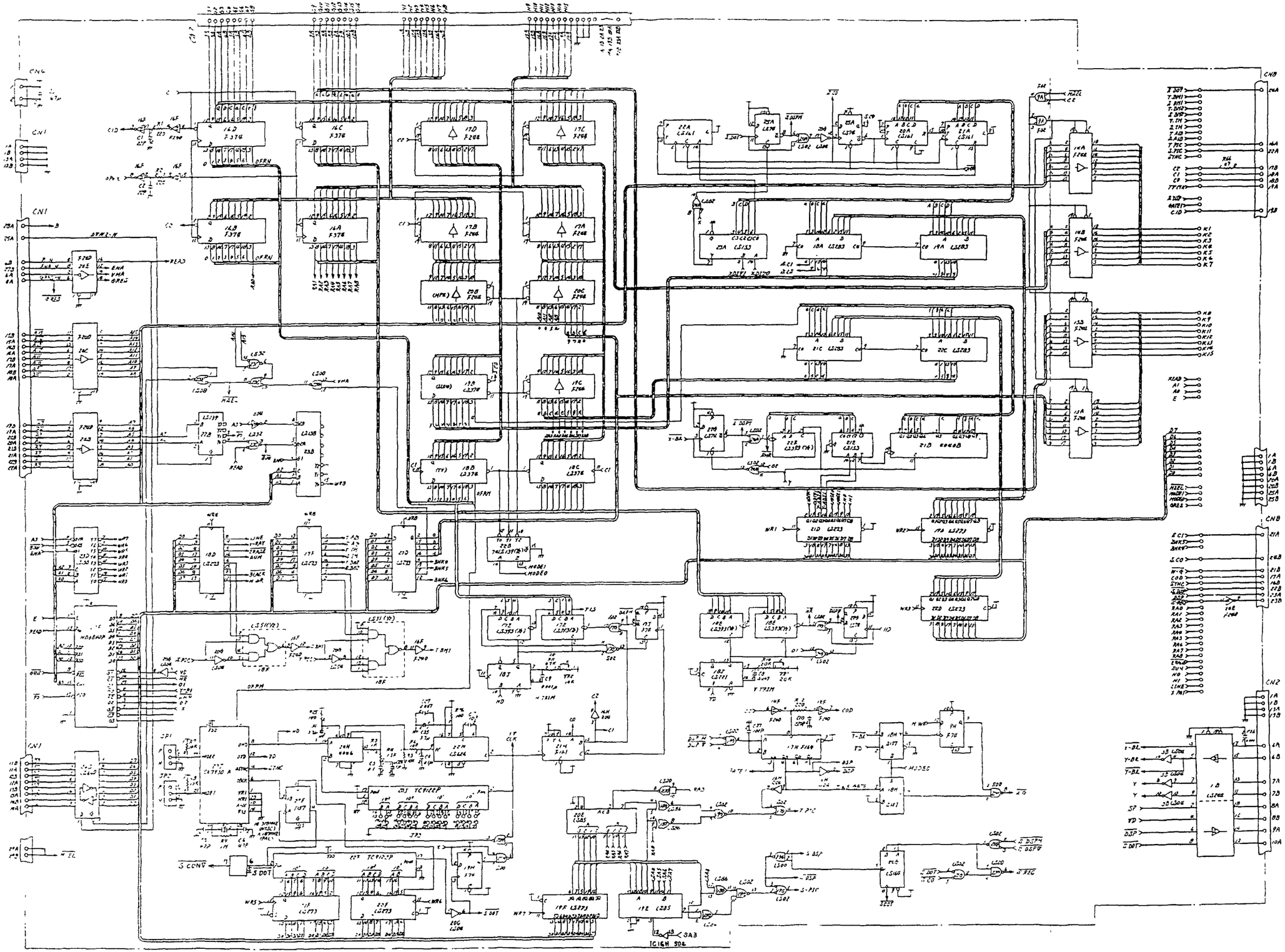

7. IMEM-01 P. C. B (1/2)

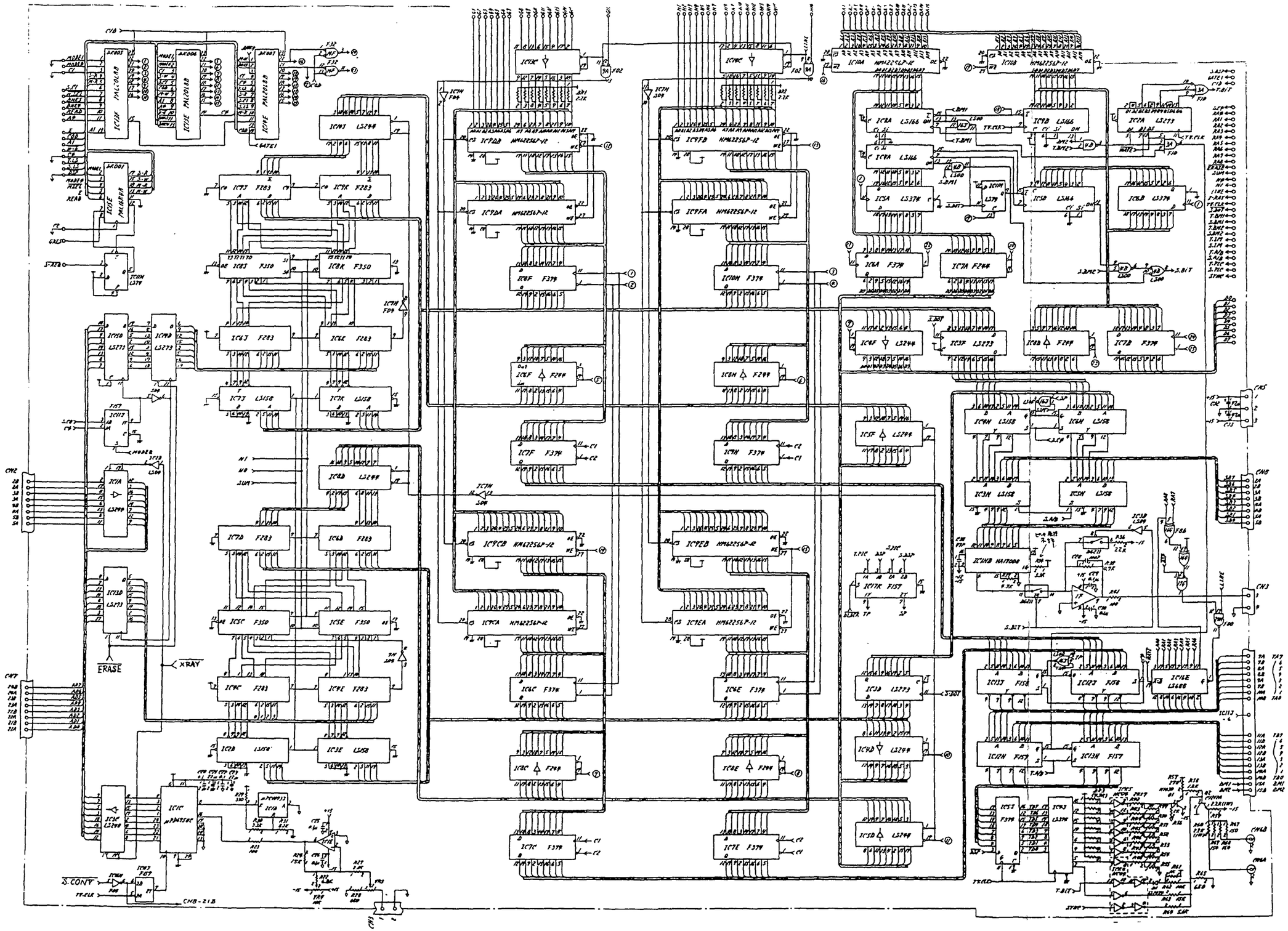

7. IMEM−01 P. C. B (2/2)

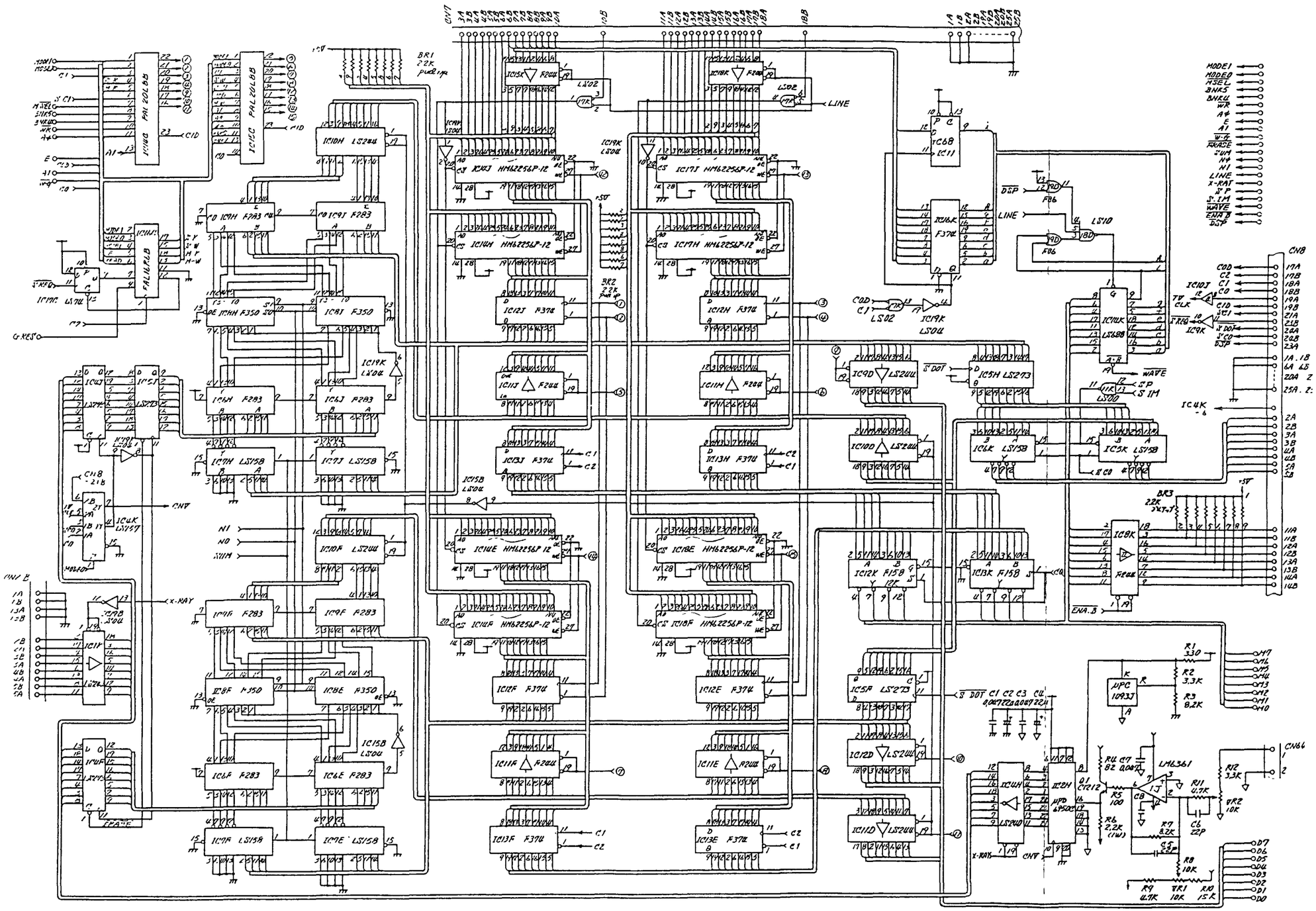

8. IMEM−03 P. C. B. (1/2) (OPTION)

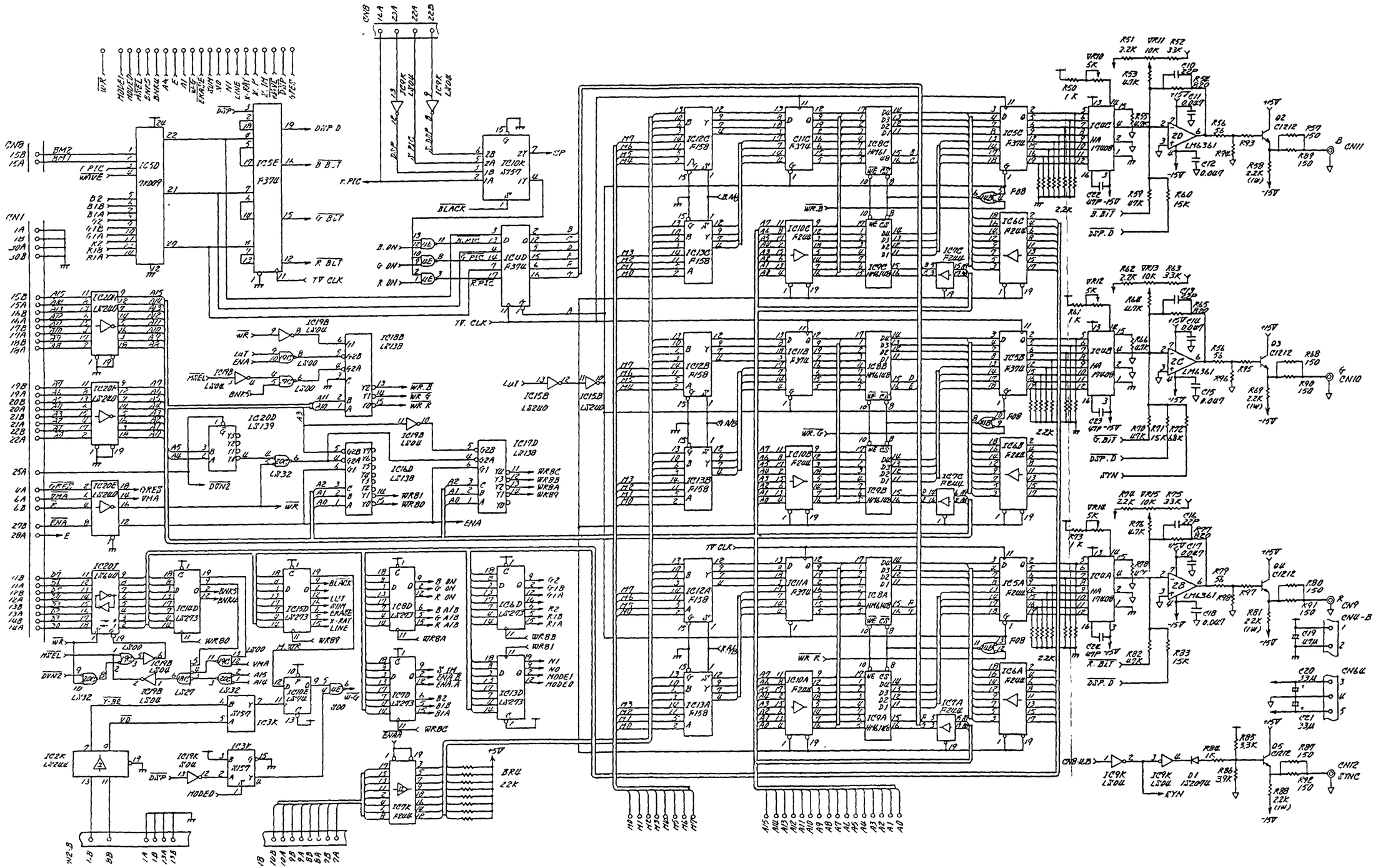

8. IMEM-03 P. C. B. (2/2) (OPTION)

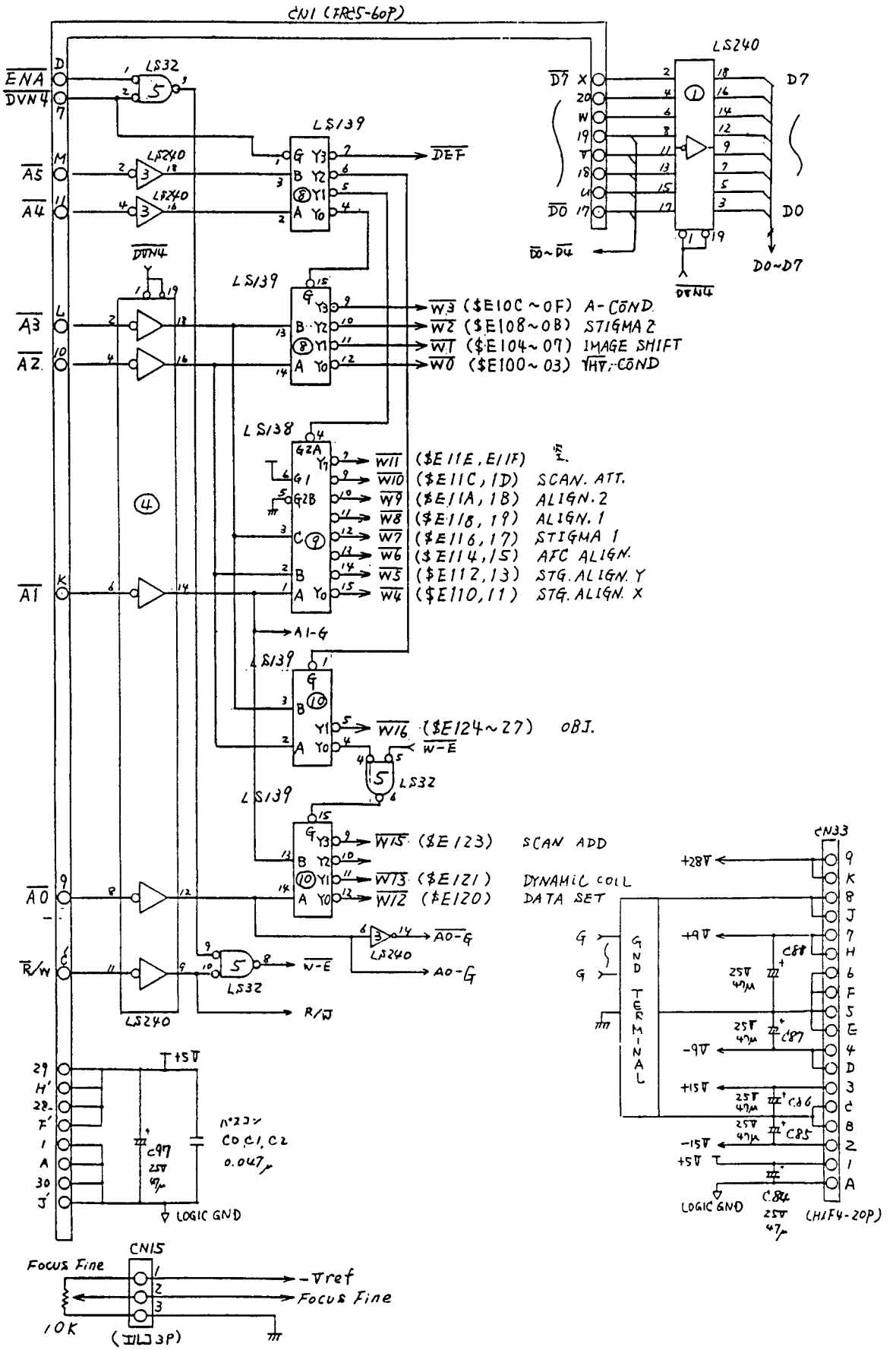

10. DEF/LENS POWER SUPPLY P. C. B (1/6)

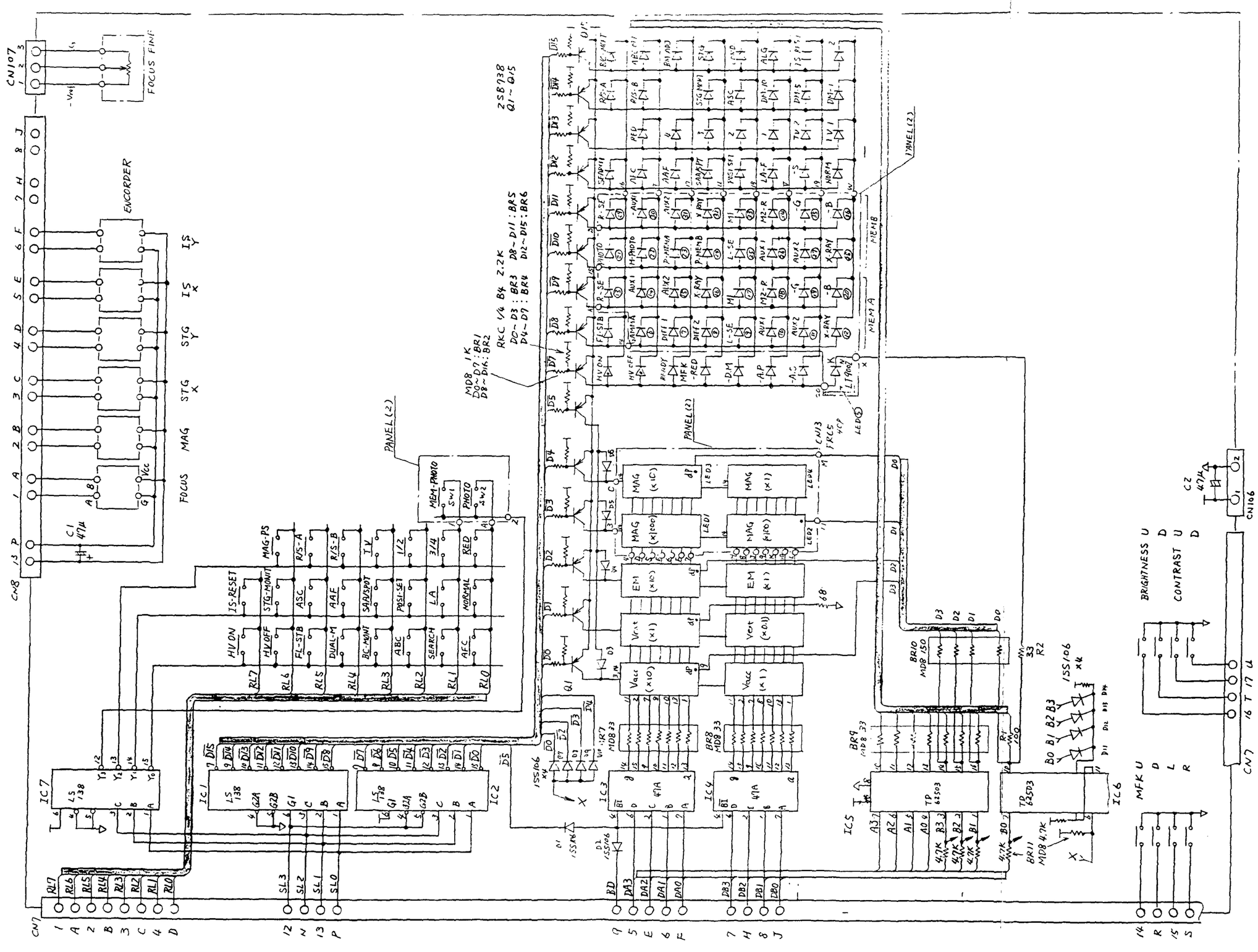
CNJ07
FOCUS FINE
ENCORDER
FOCUS MAG
CN8
IS Y
IS X
STG Y
STG X
MAG
2SB938
Q1 ~ Q15
RKC 1/4 B4 2.2K
D0~D3 : BR3 D8~D11 : BR5
D4~D7 : BR4 D12~D15 : BR6
MDB 1K
D0~D7 : BR1
D8~D15 : BR2
PANEL (2)
MEM-PHOTO
SW1
PHOTO
SW2
MAG-PS
R/S-A
R/S-B
IV
1/2
3/4
RED
IS-RESET
STG-MONIT
ASC
AAF
SARASPOT
POSI-SET
LA
NORMAL
HV ON
HV OFF
FL-STB
DUAL-M
BC-MONIT
ABC
SEARCH
AFC
RL7
RL6
RL5
RL4
RL3
RL2
RL1
RL0
IC7
LS 138
IC1
IC2
IC3
IC4
IC5
IC6
SL3
SL2
SL1
SL0
BR10
MDB 150
BR9
MDB 33
BR8
MDB 33
BR11
MDB 4.7K
1SS106
LED15
LED16
LED1
LED2
LED3
LED4
MEM A
MEM B
CN13
FKCS
4CP
CN106
CN7
BRIGHTNESS U D
CONTRAST U D
MFK U D L R
16 T 17 U
14 R 15 S
CN7
1 A 2 B 3 C 4 D
12 N 13 P
11 E 6 F
7 H 8 J
14 R 15 S

9. PANEL P. C. B

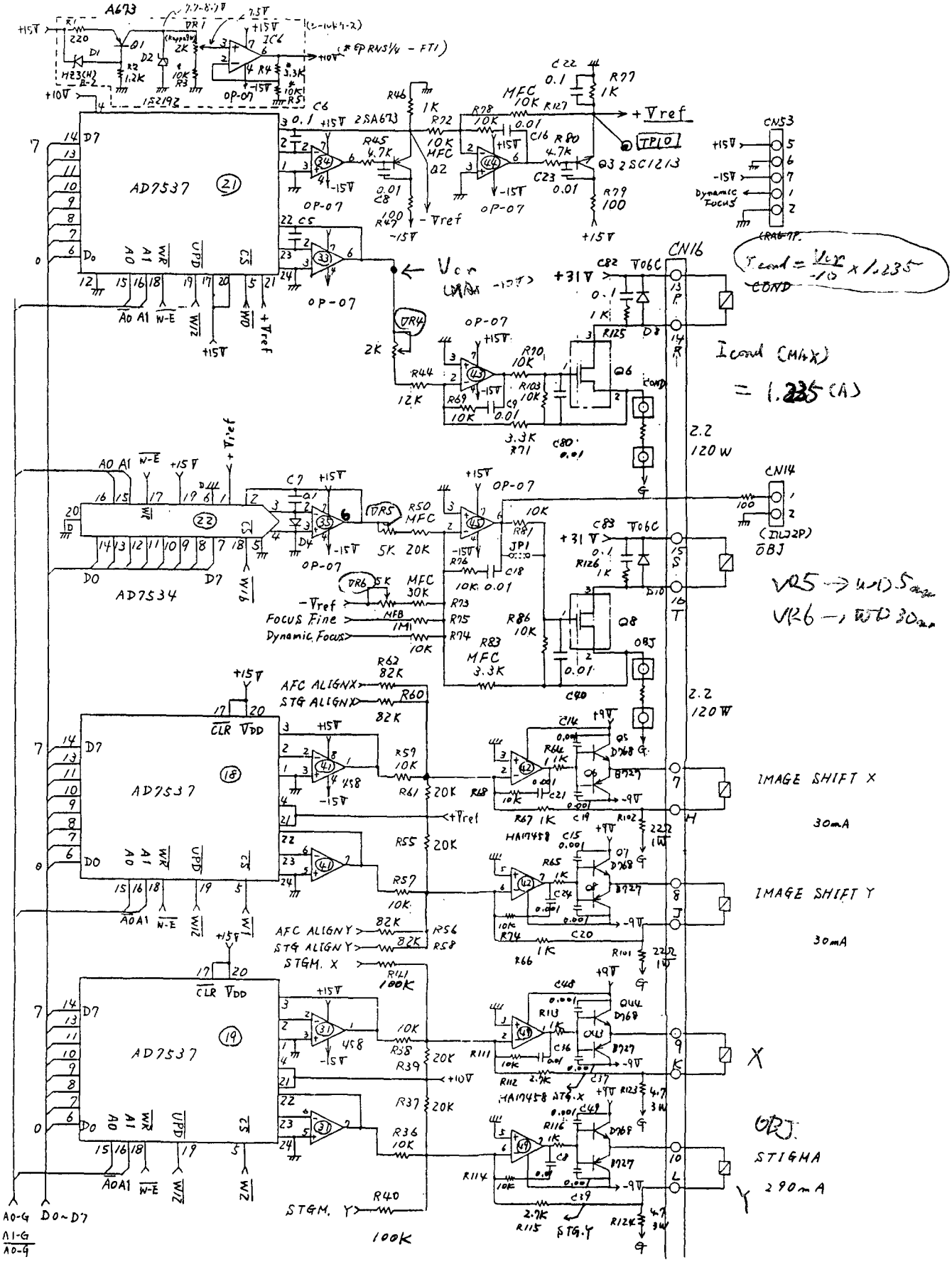

10. DEF/LENS POWER SUPPLY P. C. B (2/6)

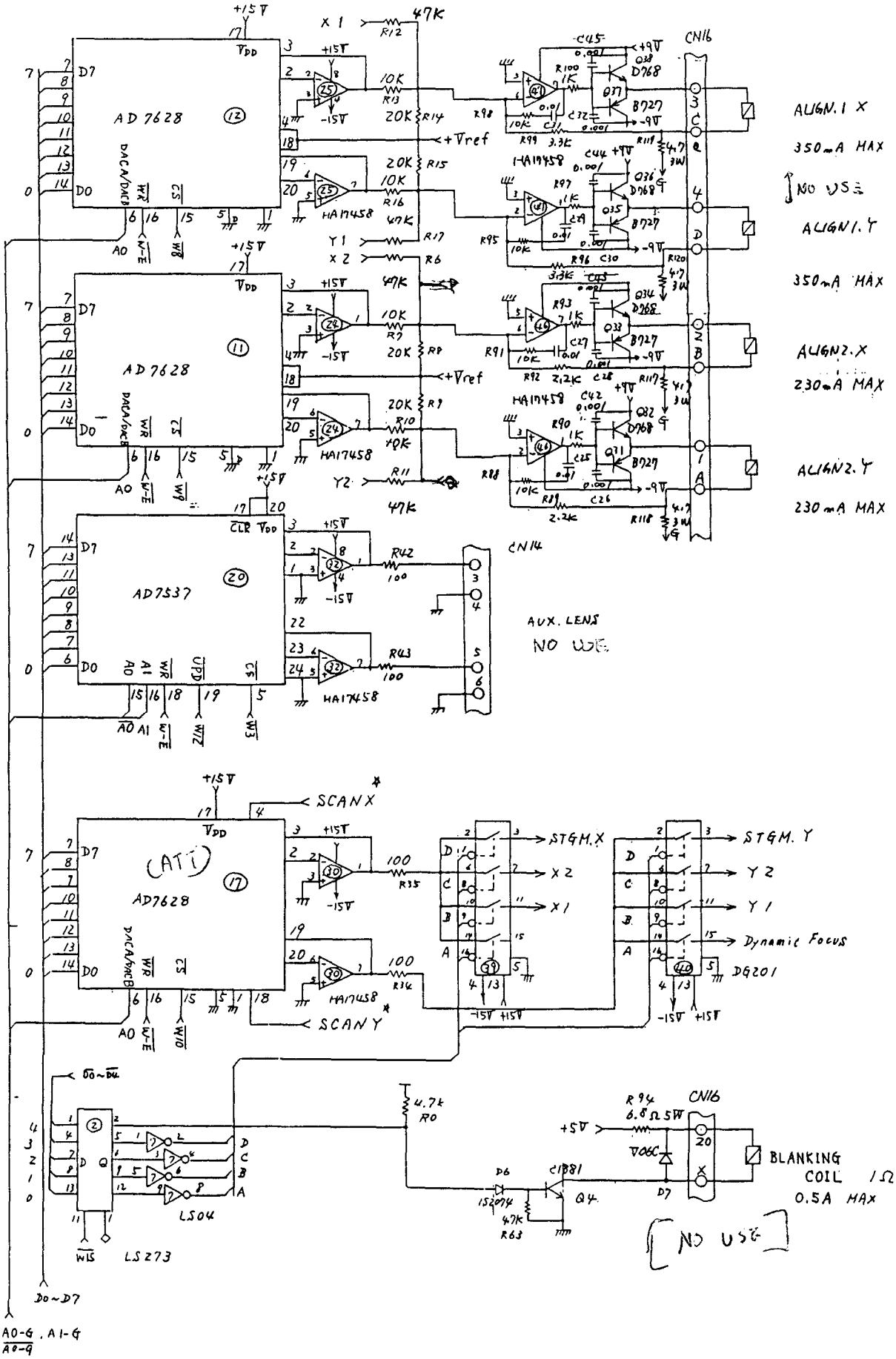

10. DEF/LENS POWER SUPPLY P. C. B (3/6)

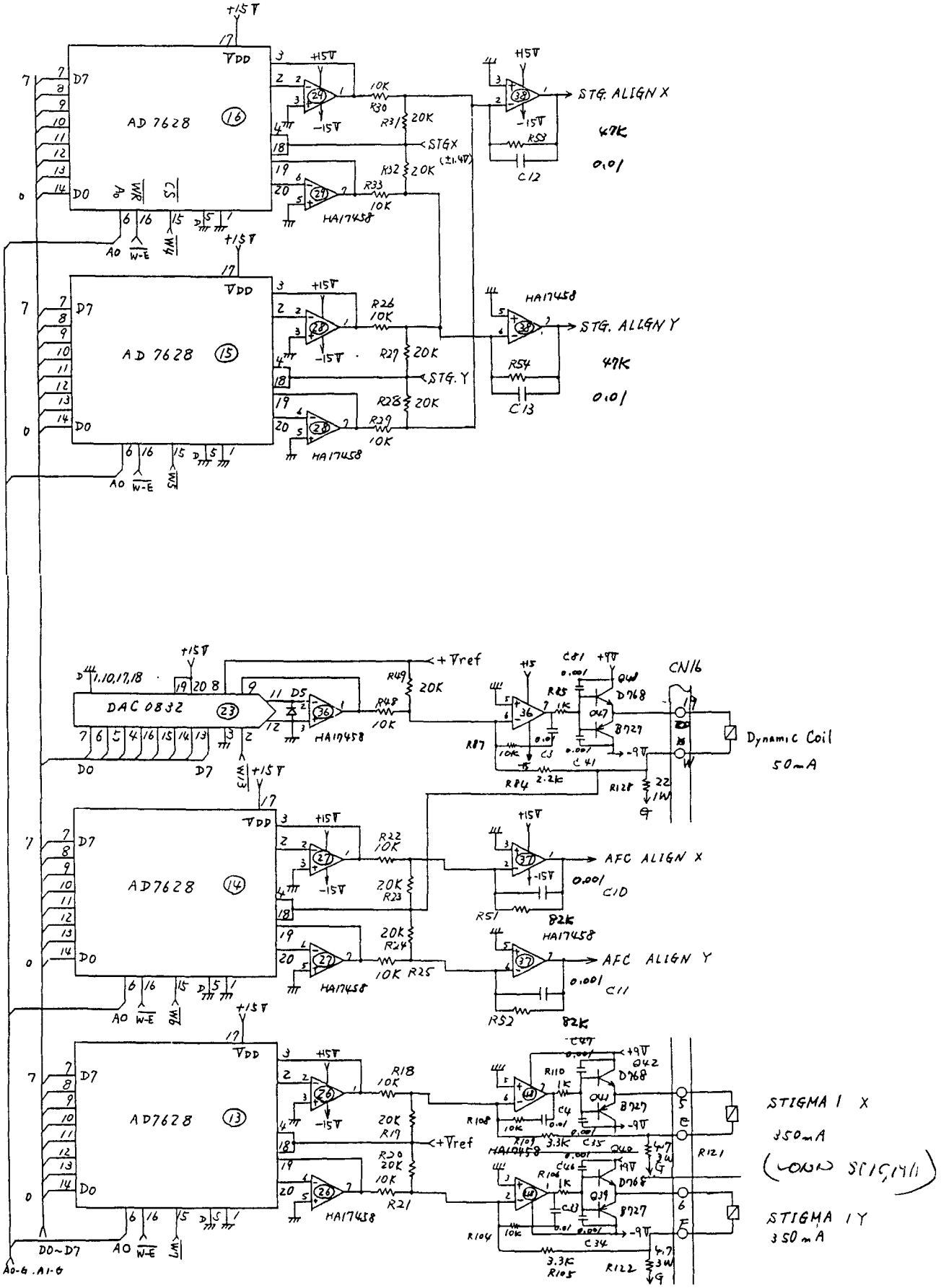

10. DEF/LENS POWER SUPPLY P. C. B (4/6)

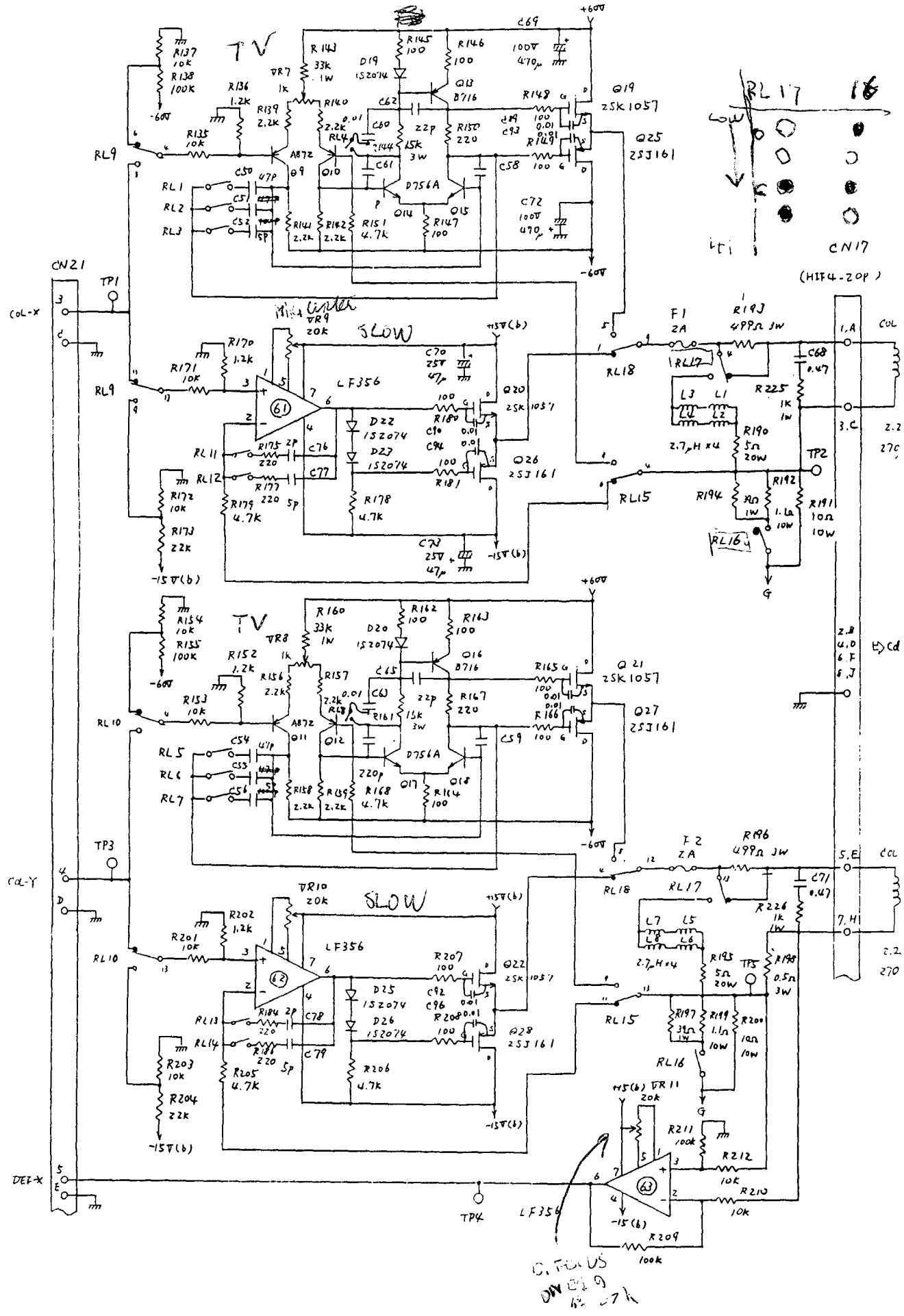

10. DEF/LENS POWER SUPPLY P. C. B (5/6)

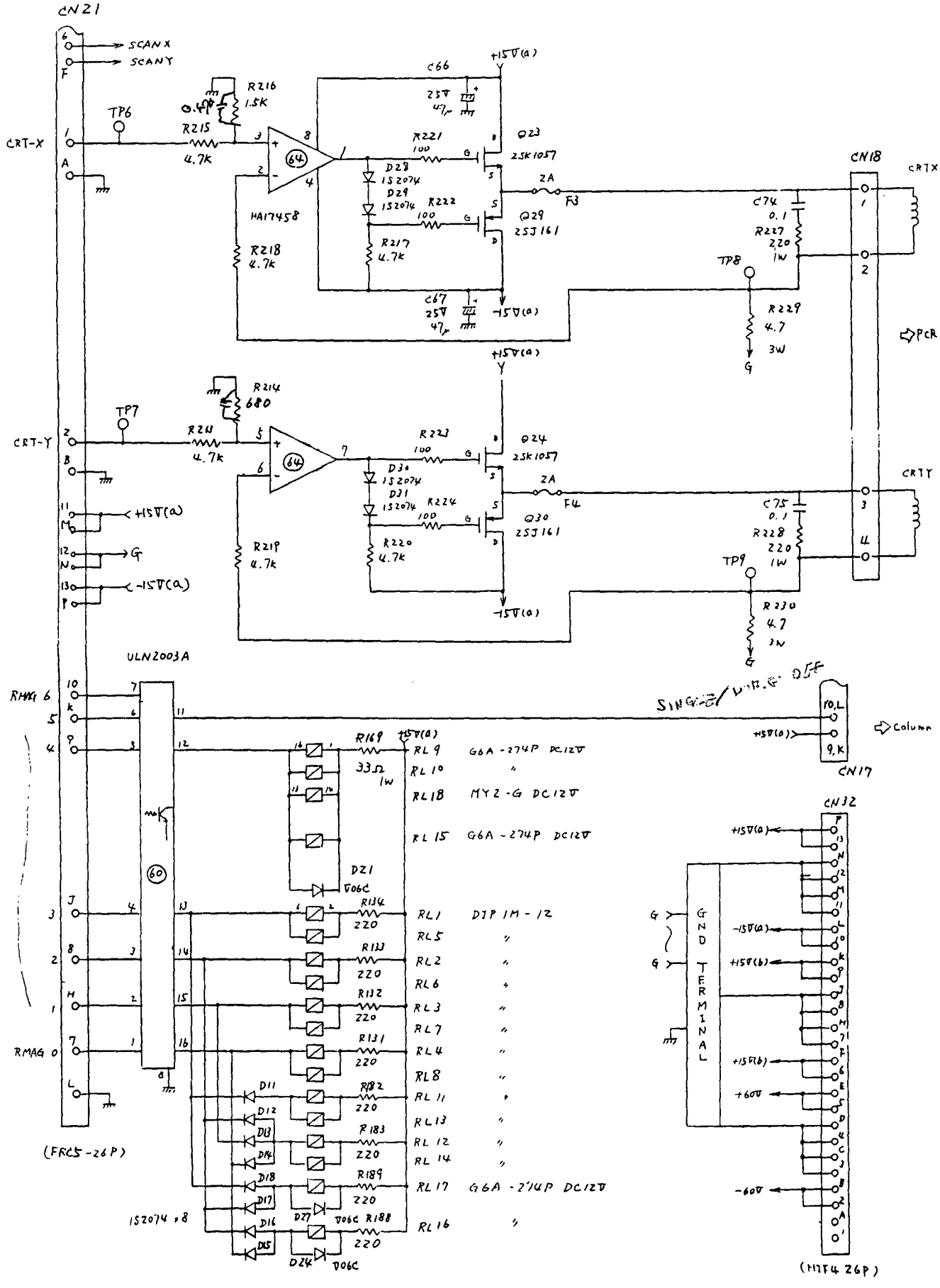

10. DEF/LENS POWER SUPPLY P. C. B (6/6)

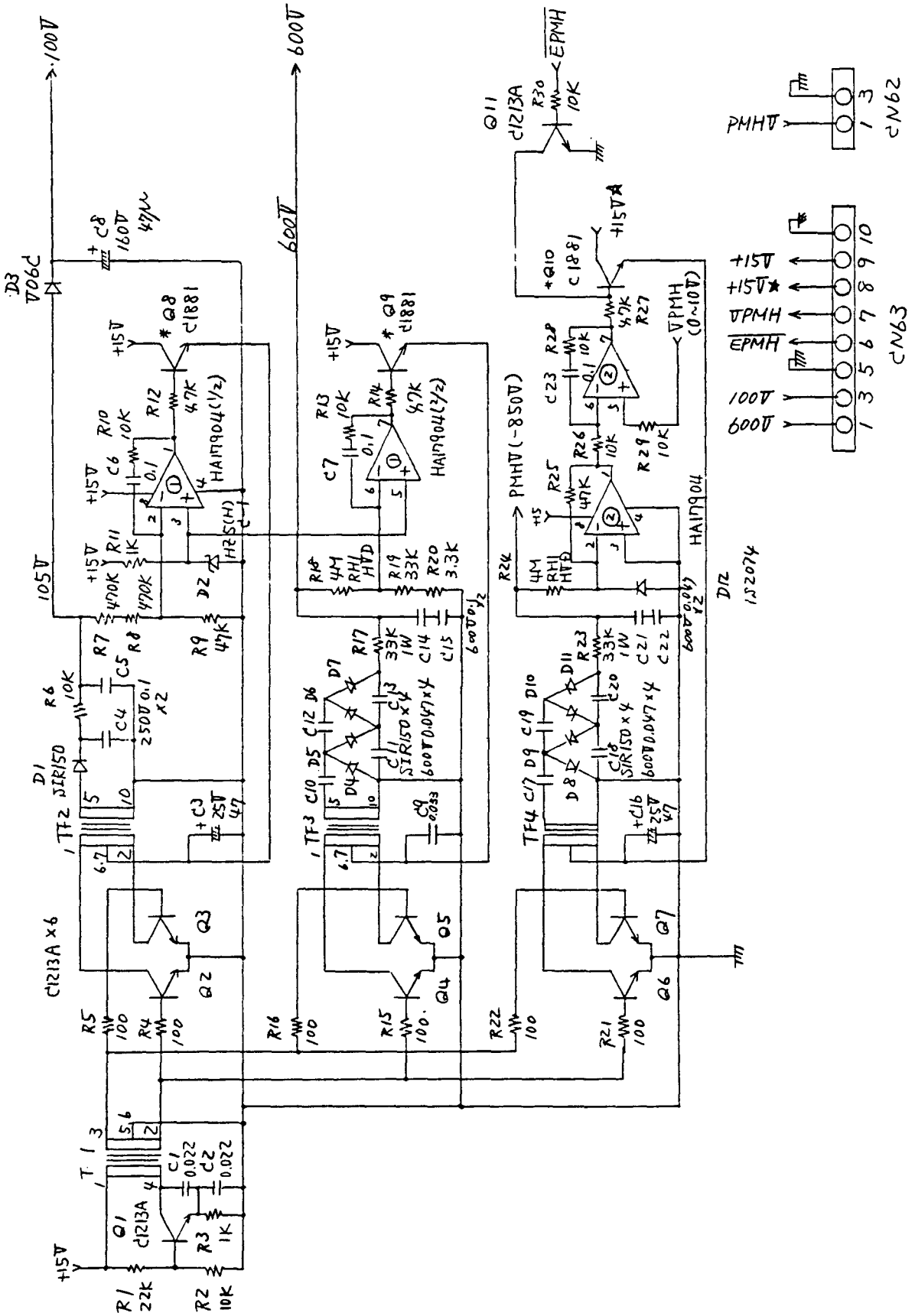
+100V
600V
D3
V06C
C8
160V
47μ
+15V
Q8
C1881
R10
10K
R12
47K
C6
0.1
HA17904(1/2)
R11
1K
470K
470K
R7
R8
R9
47K
D2
HZ5(H)
105V
R6
10K
C5
C4
250V 0.1
×2
D1
SIR150
TF2
C3
25V
47
Q3
Q2
C1213A ×6
R5
100
R4
100
T1
C1
0.022
C2
0.022
Q1
C1213A
R3
1K
R1
22K
R2
10K
R13
10K
R14
47K
C7
0.1
HA17904(1/2)
R18
4.4
R19
33K
R20
3.3K
R17
33K
1W
C14
C15
600V 0.1
D7
D6
D5
D4
C12
C13
C10
C11
SIR150×4
600V 0.047×4
TF3
C9
0.033
Q5
Q4
R16
100
R15
100
Q11
C1213A
R30
10K
EPMH
Q10
C1881
R27
4.7K
R28
10K
C23
0.1
R29
10K
R26
10K
R25
47K
R24
4.4
R23
33K
1W
C20
C21
C22
0.047
D11
D10
C19
C18
SIR150×4
600V 0.047×4
TF4
C16
25V
47
Q7
Q6
R22
100
R21
100
PMHV(-850V)
VPMH
(0~10V)
HA17904
D12
1S2074
CN62
PMHV
CN63
+15V
+15V*
VPMH
EPMH
100V
600V

11. PM HV P. C. B.

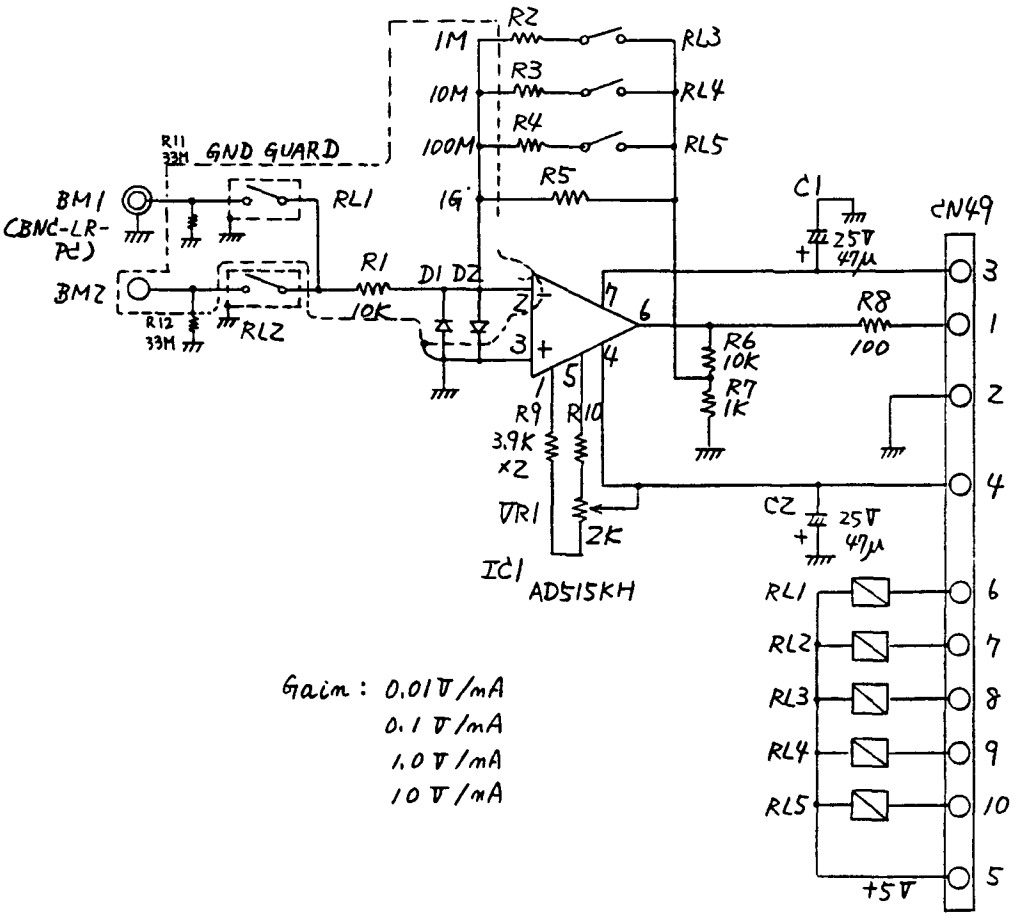

12. BEAM MONITOR PRE AMP

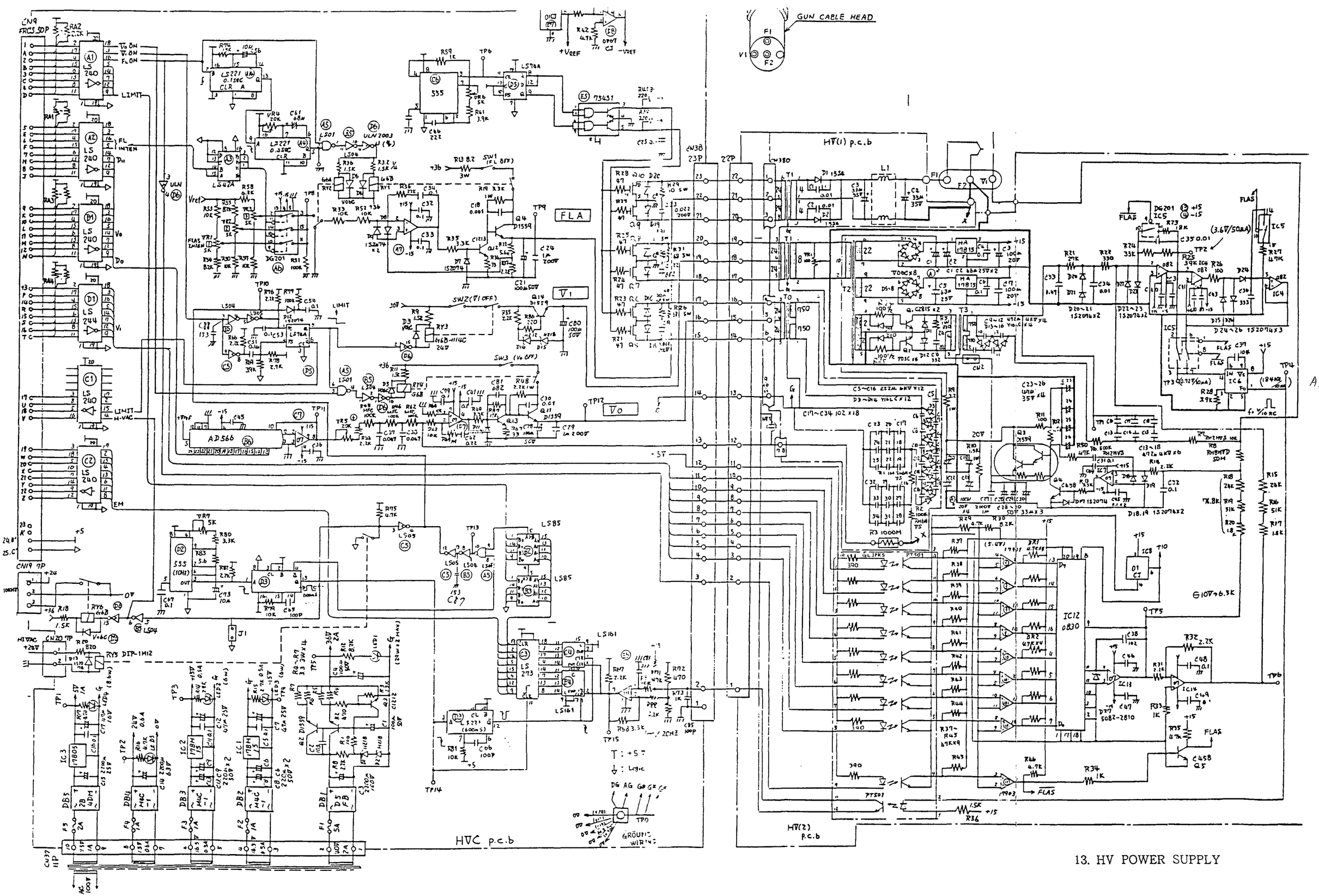

13. HV POWER SUPPLY

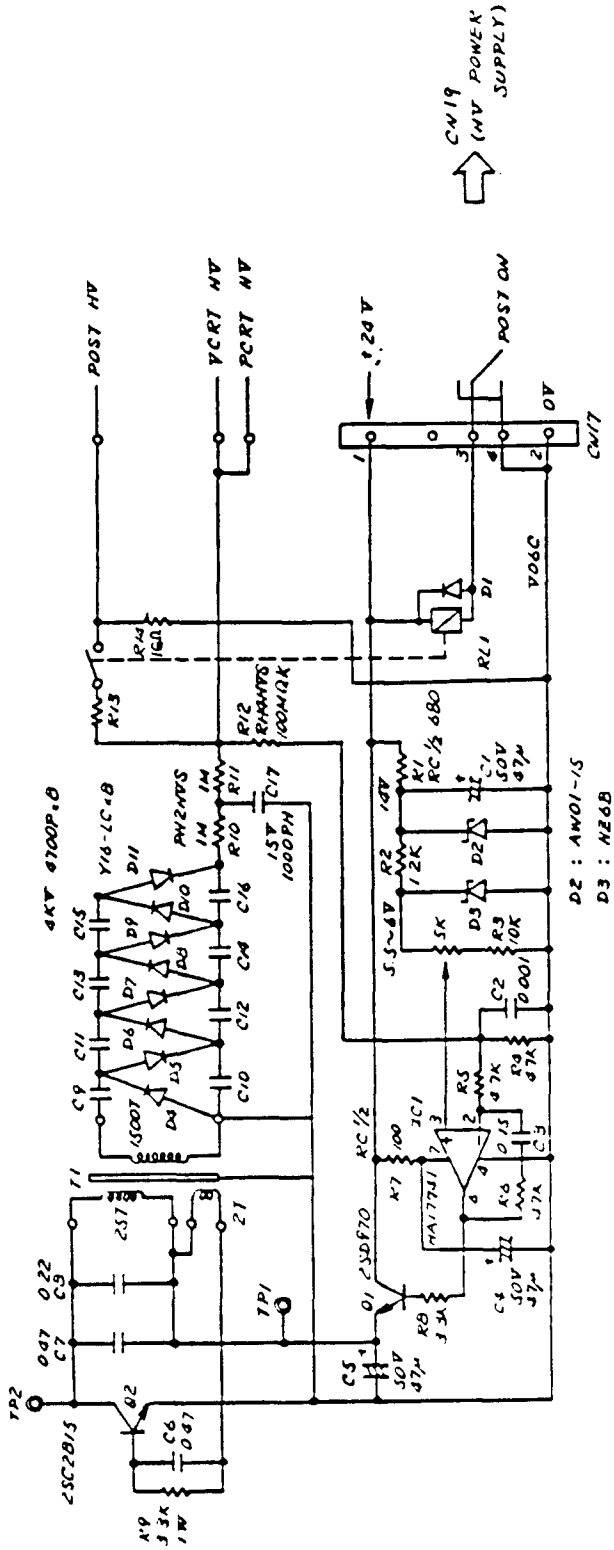

14. 10K HV POWER SUPPLY

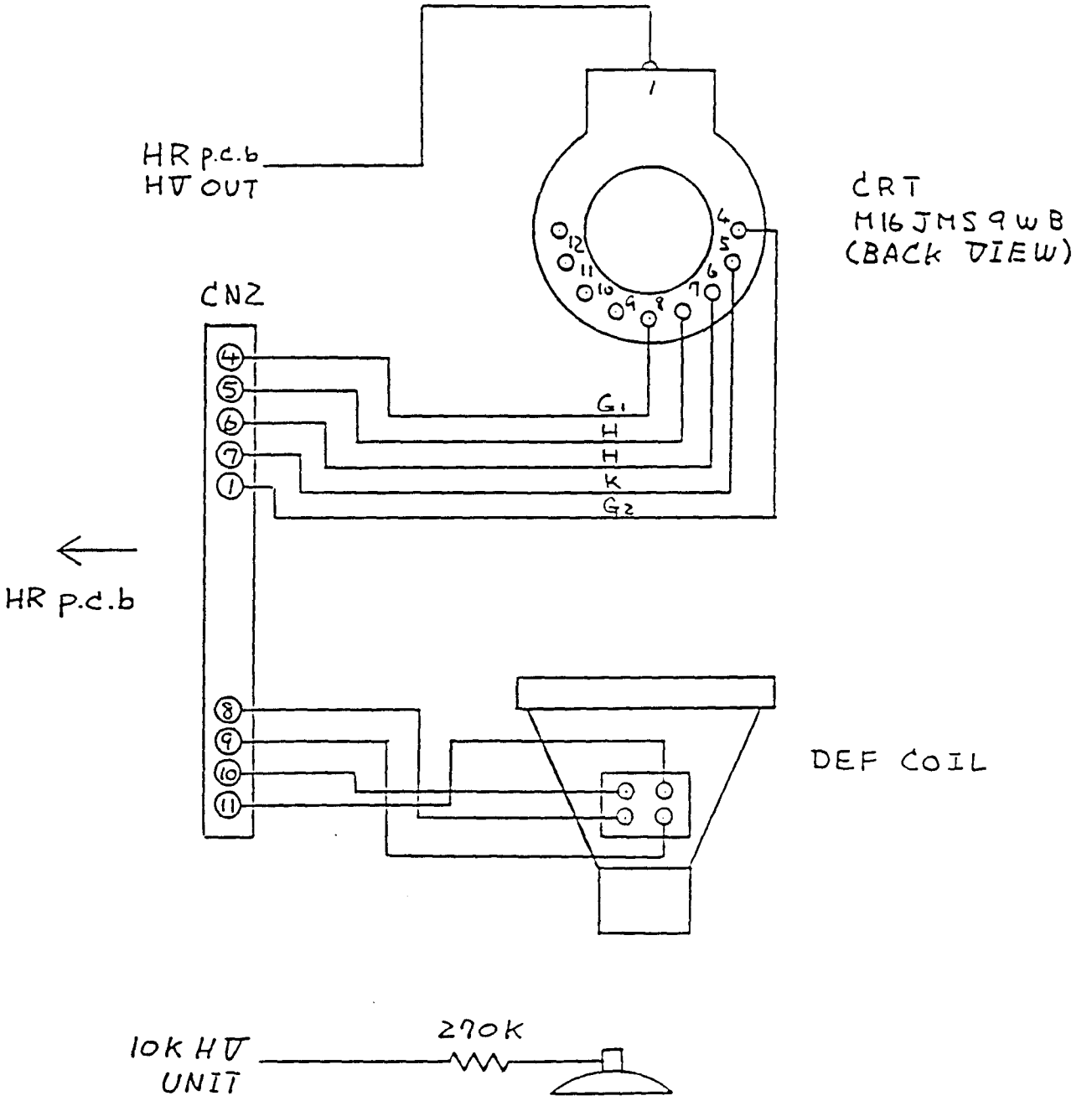

15. PHOTO CRT UNIT

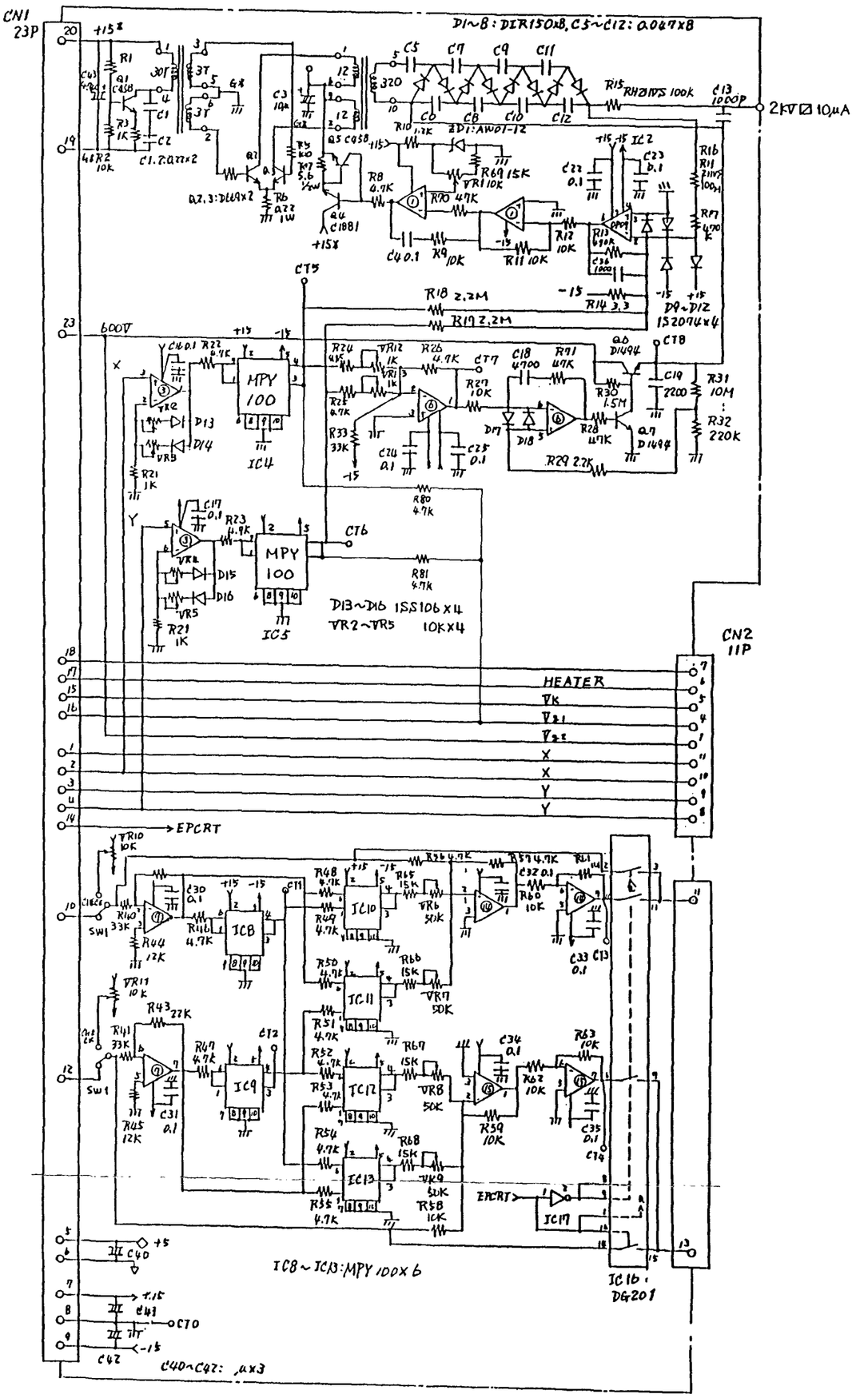
CN1
23P
D1~8: DIR150x8, C5~C12: 0.047x8
2kV 10μA
MPY 100
IC4
IC5
D13~D16 1SS106x4
VR2~VR5 10Kx4
CN2
11P
HEATER
EPCRT
IC8~IC13: MPY 100x6
IC16: DG201
C40~C42: μx3

16. HR P. C. B.

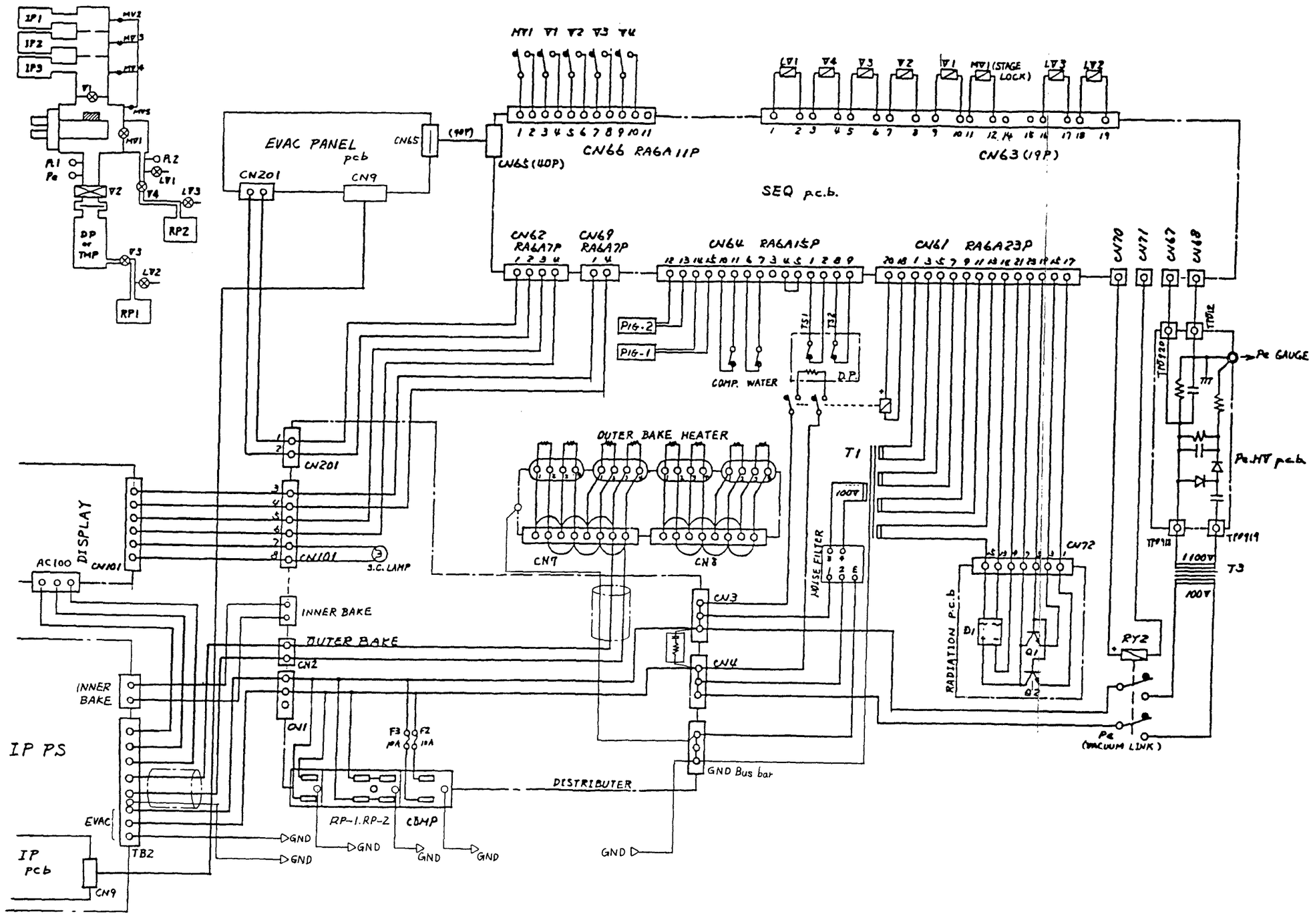

17. EVAC SEQUENCE WIRING DIAGAM

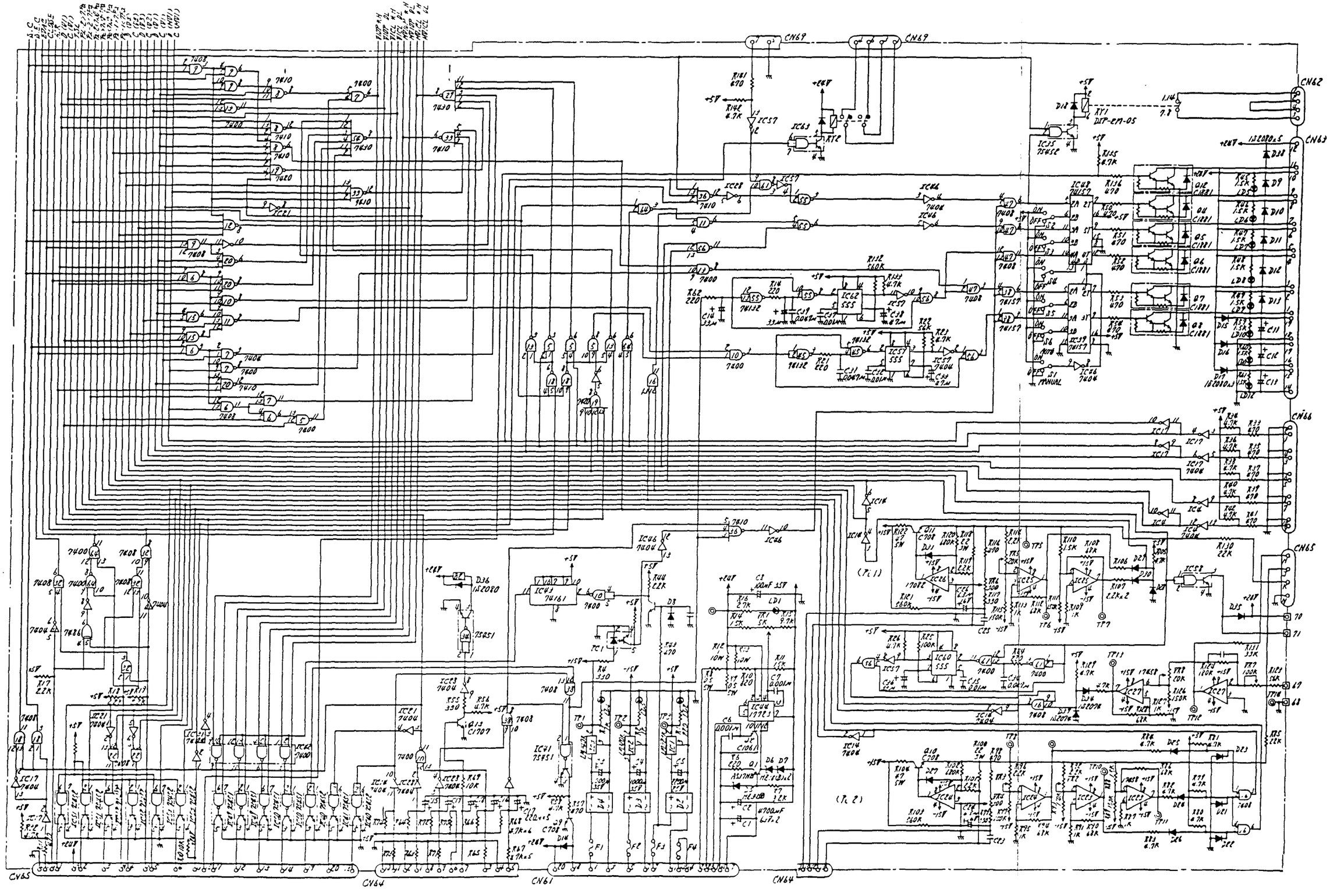

18. EVAC SEQUENCE P. C. B.

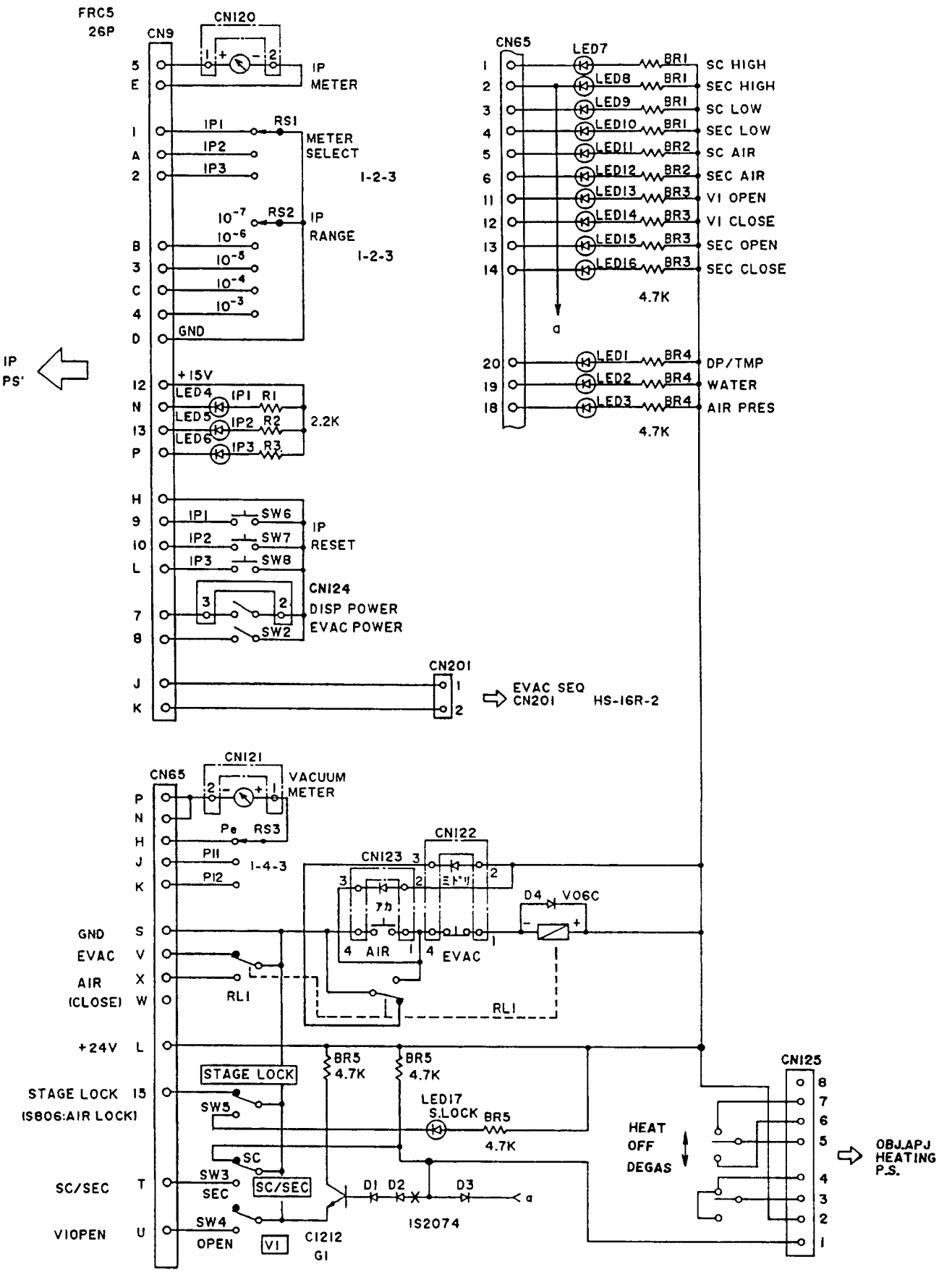

19. EVAC PANEL P. C. B.

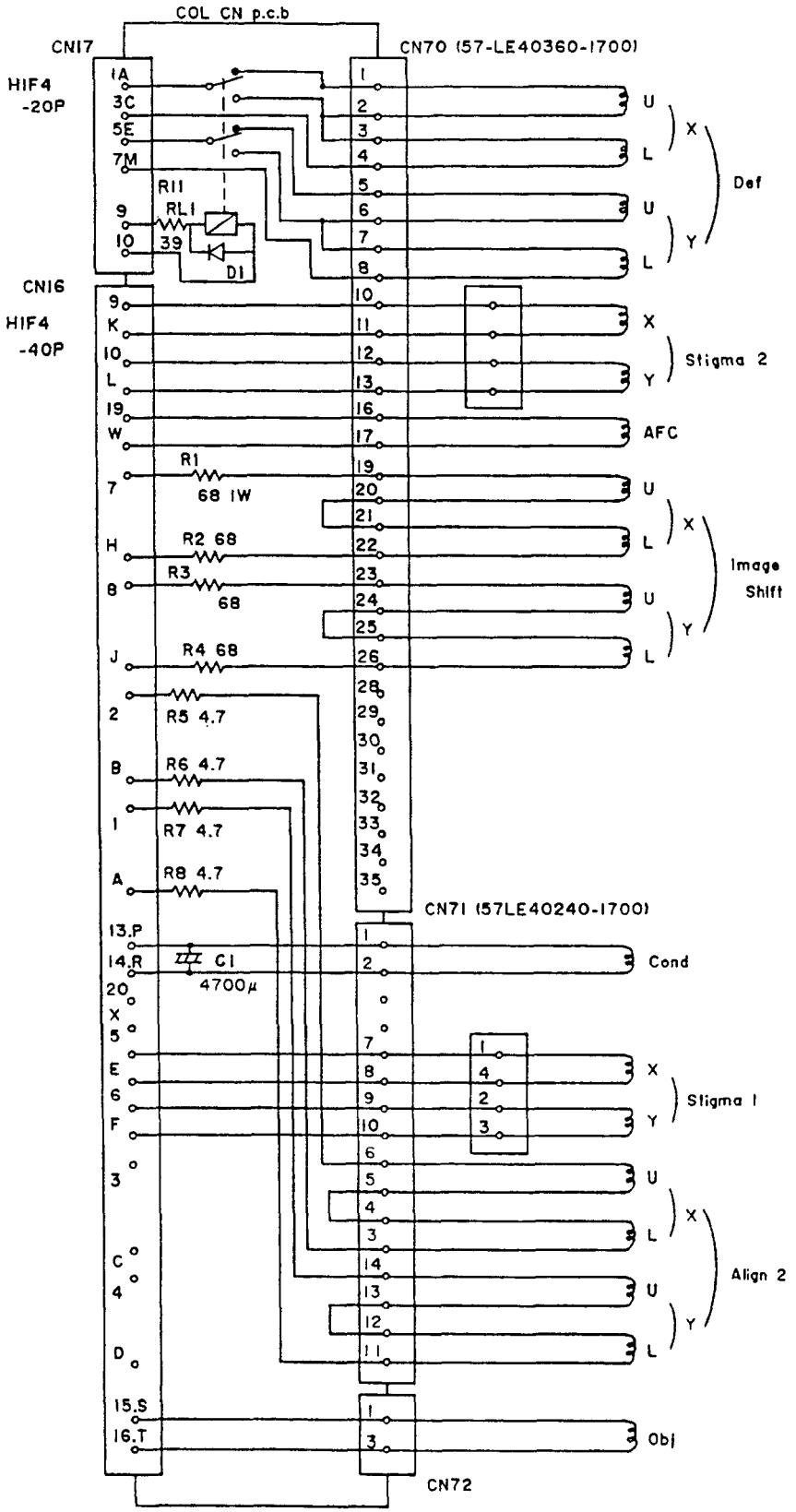

20. COLUMN CN P. C. B.

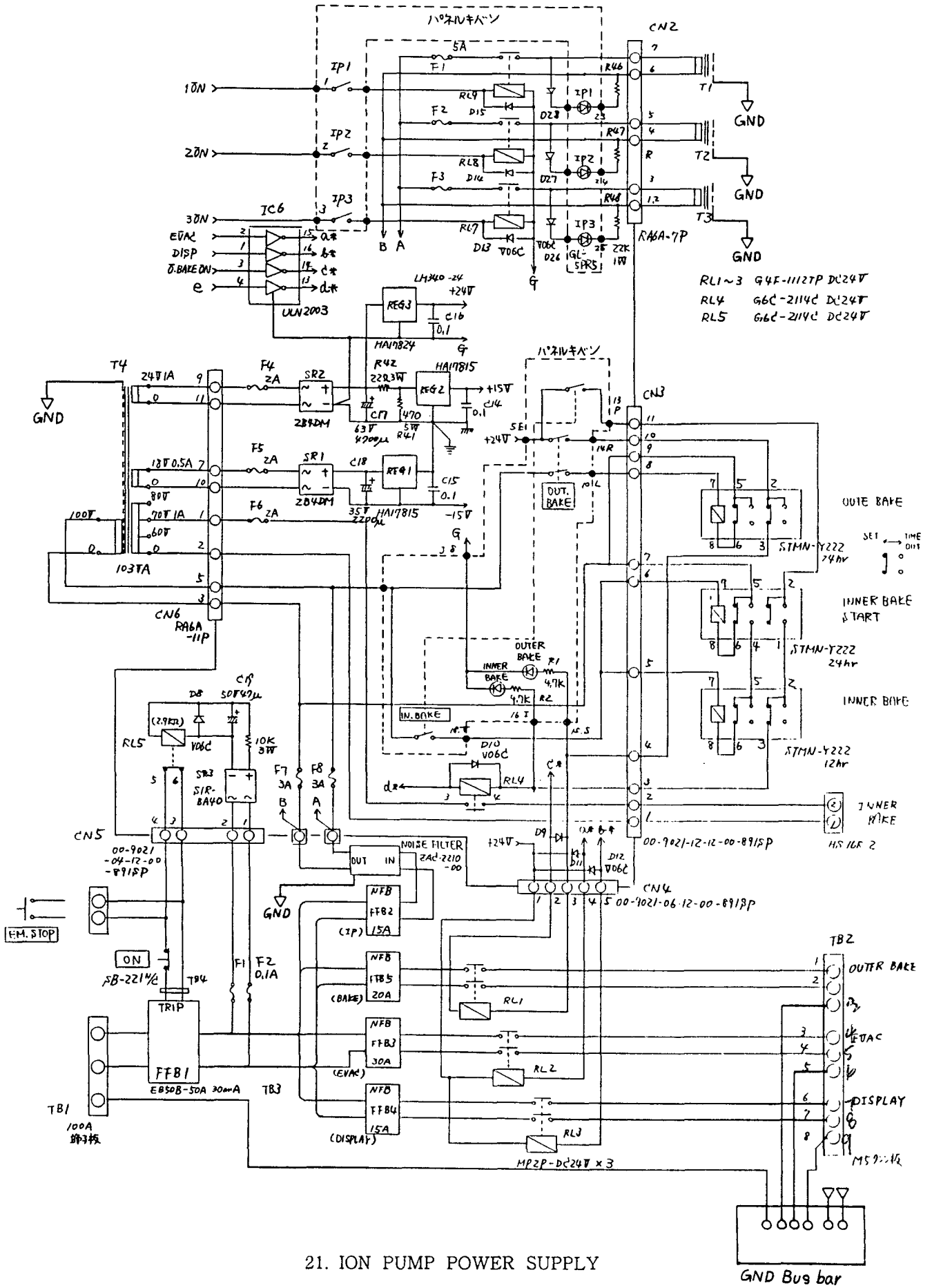

21. ION PUMP POWER SUPPLY

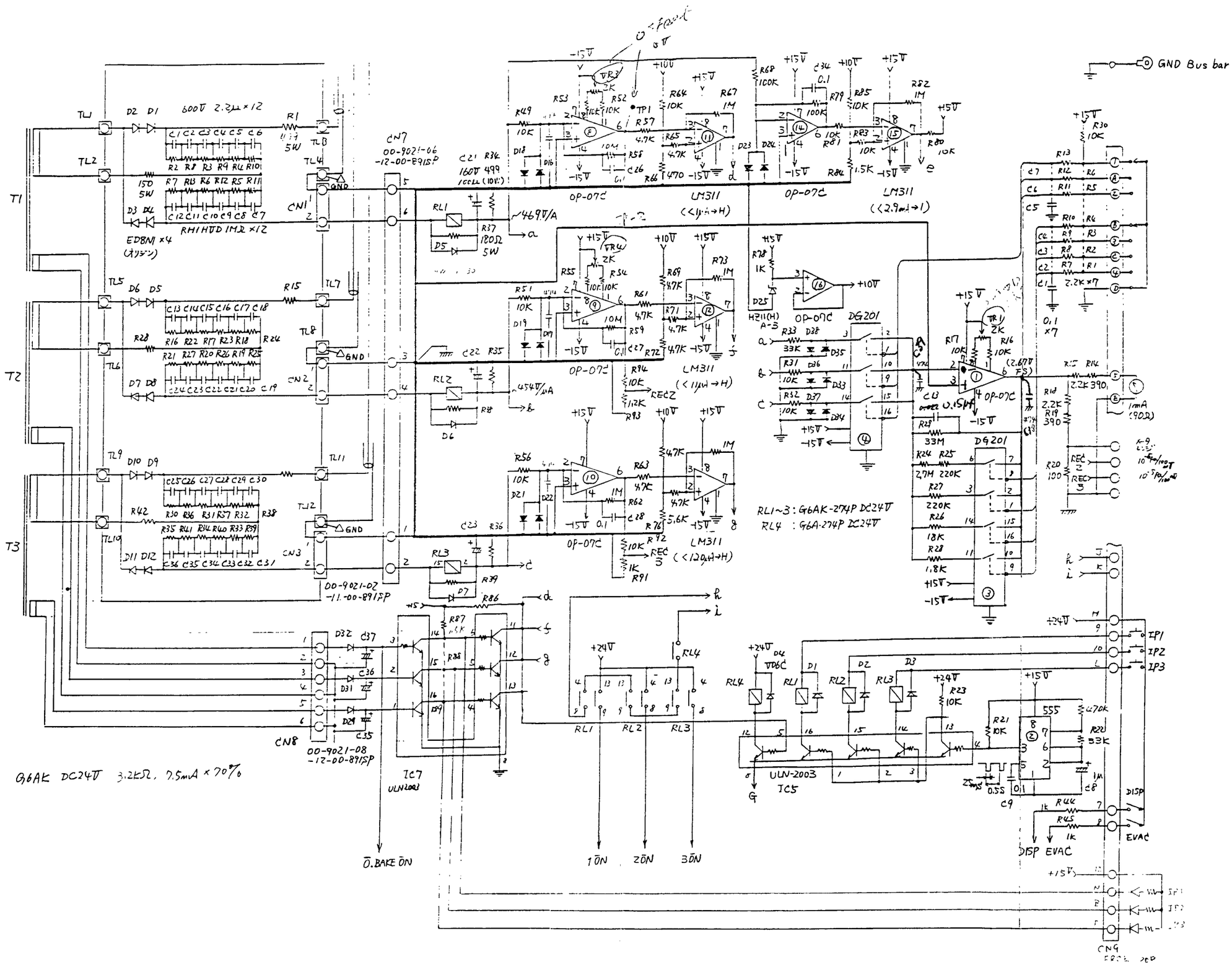
GND Bus bar
T1
T2
T3
CN7
00-9021-06
-12-00-891SP
CN1
CN2
CN3
00-9021-02
-11-00-891SP
CN8
00-9021-08
-12-00-891SP
CN9
OP-07C
LM311
DG201
ULN-2003
IC5
IC7
555
RL1~3 : G6AK-274P DC24V
RL4 : G6A-274P DC24V
G6AK DC24V 3.2kΩ, 7.5mA × 70%
O.BAKE ON
1ON
2ON
3ON
DISP
EVAC
IP1
IP2
IP3

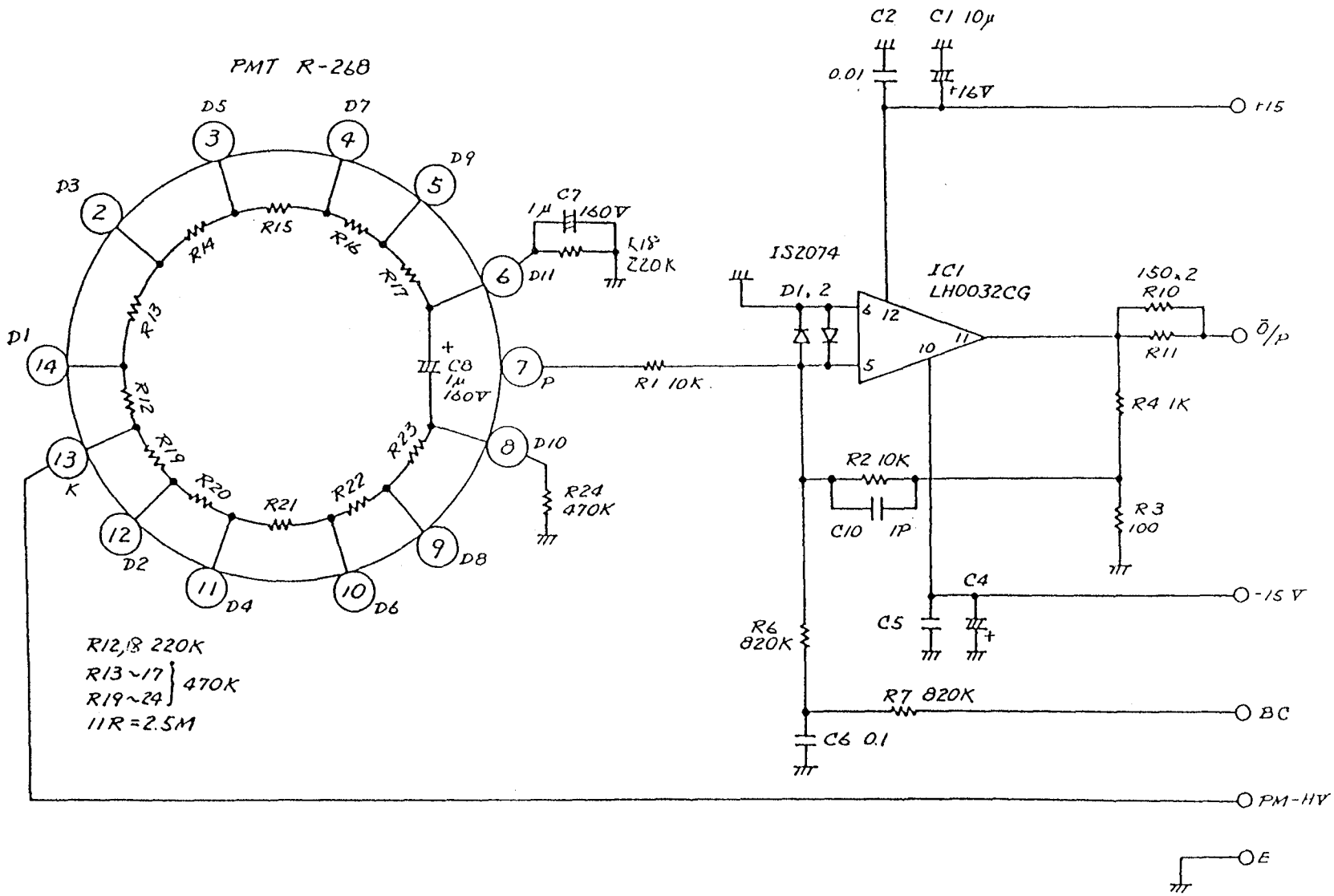
PMT R-268
D1
D2
D3
D4
D5
D6
D7
D8
D9
D10
D11
K
P
R12,18 220K
R13~17
R19~24
470K
11R=2.5M
C7 1μ 160V
R18 220K
C8 1μ 160V
R24 470K
R1 10K
IS2074
D1, 2
IC1 LH0032CG
C2 0.01
C1 10μ
+16V
+15
150×2 R10
R11
O/P
R4 1K
R2 10K
C10 1P
R3 100
C4
-15 V
C5
R6 820K
R7 820K
BC
C6 0.1
PM-HV
E

23. HEAD AMP

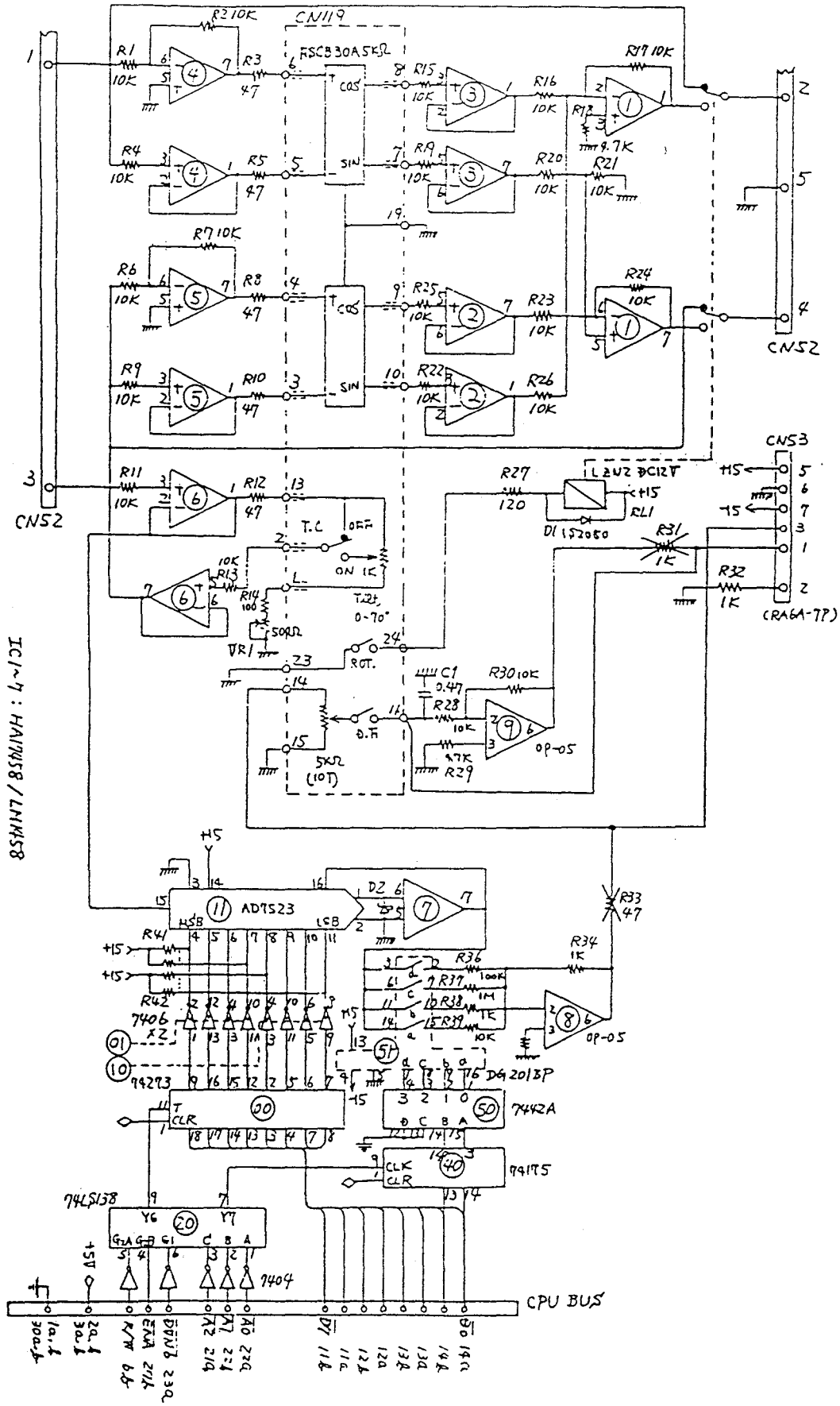

24. S−6509 RASTER ROTATION/DYNAMIC FOCUS UNIT

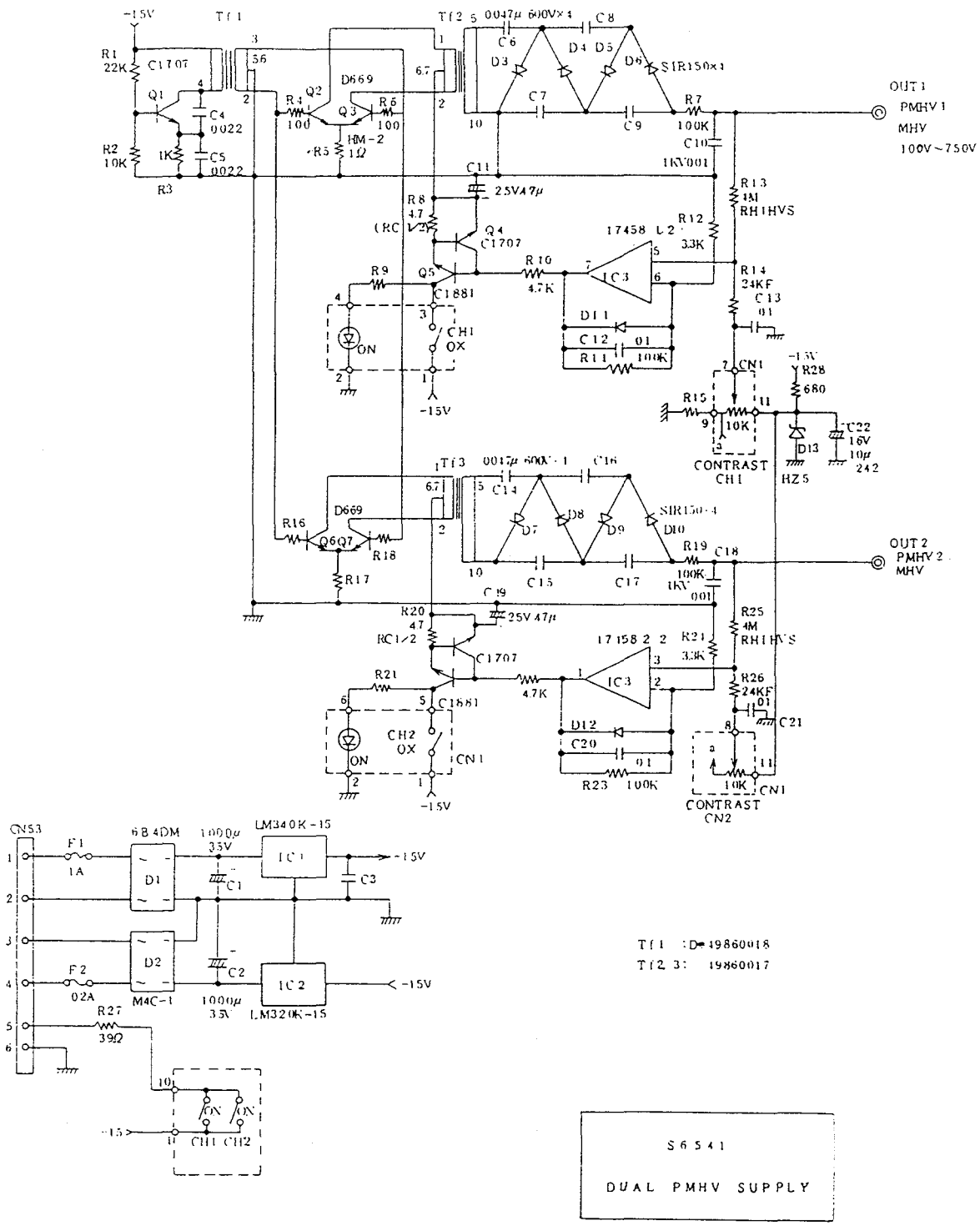

25. S-6541 DUAL PMHV UNIT

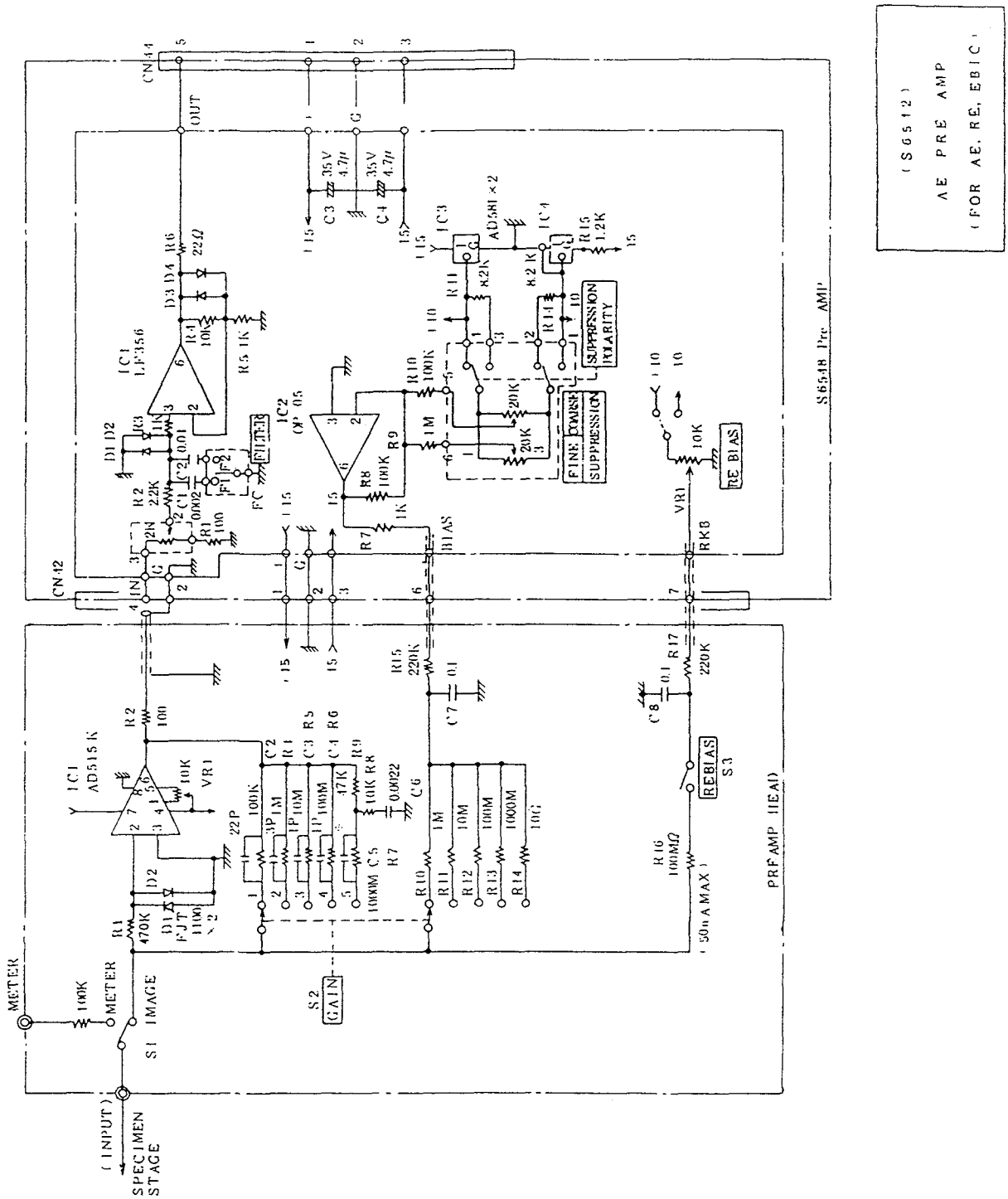

26. S-6542 PRE AMP UNIT

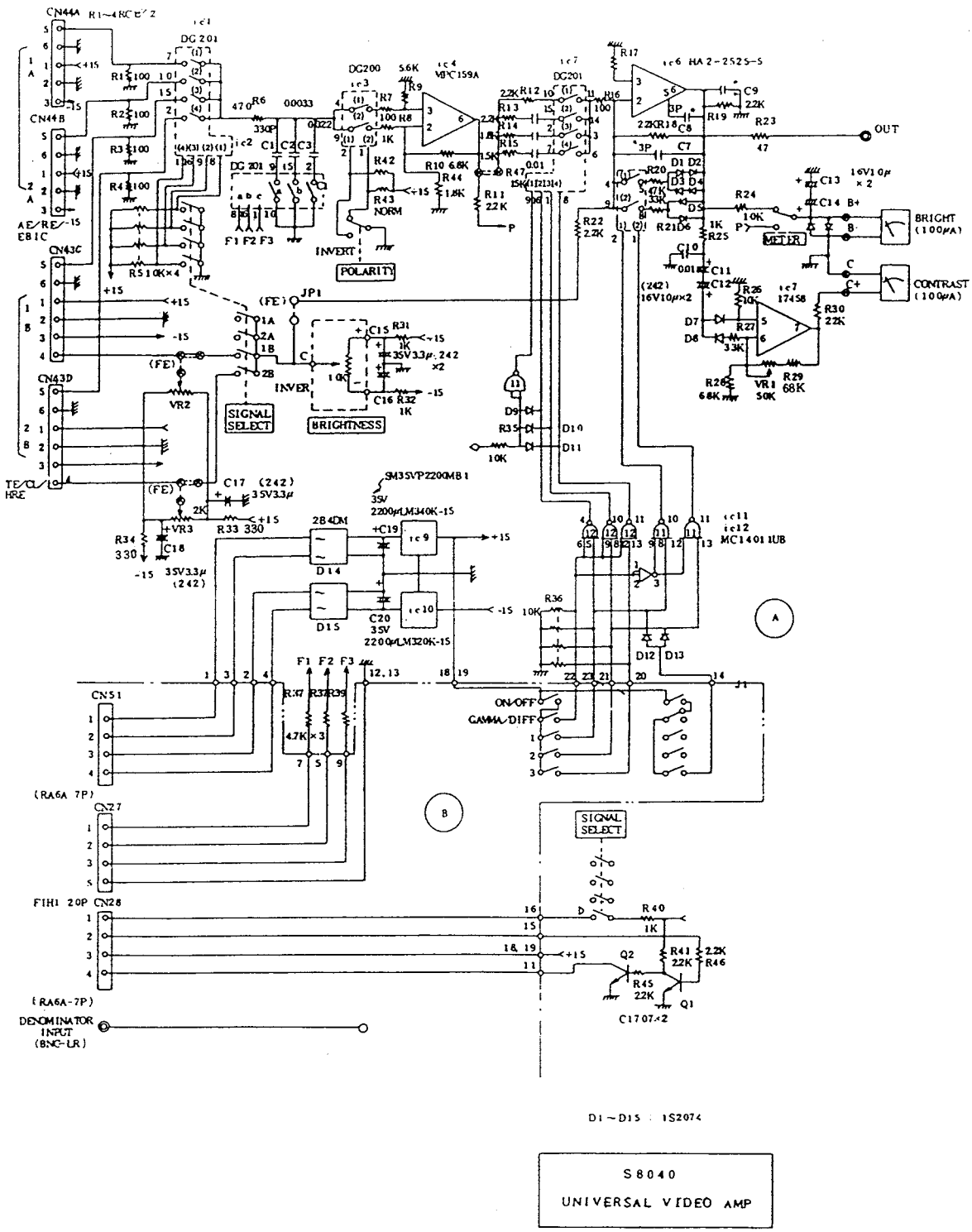

27. S-8040 UNIVERSAL VIDEO AMP UNIT (1/2)

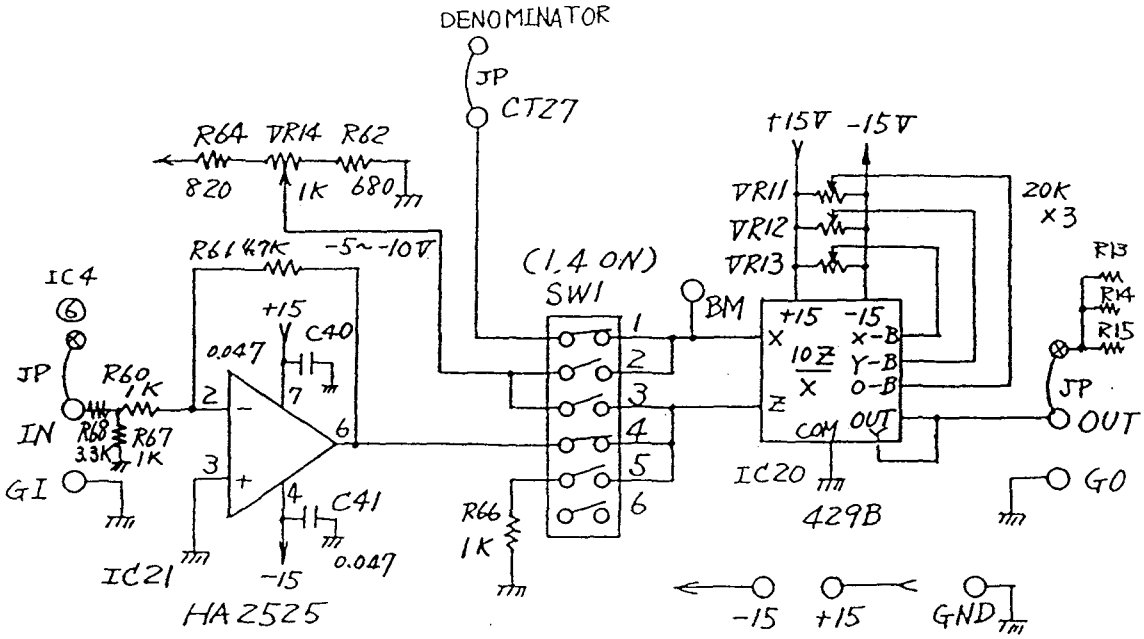

FE－Divider

27. S－8040 UNIVERSAL VIDEO AMP UNIT (2/2)