S-3200N Scanning Microscope

Introduction Manual

REV. 0

1/27/98

53200INT-0

S-3200N STRONG POINTS

1. COMPREHENSIVE VISUAL OPERATION
   - Graphic color menu driven operation with mouse
   - Graphic input and measurement
   - Full keyboard operation (IBM Keyboard)
2. EXPANSIVE FRAME MEMORY
   - 2048×1920 Pixel memory
   - Electronic digital zoom
3. FULL AUTOMATED OPERATION
   - Auto Start
   - Auto Filament Saturation
   - Auto Gun Alignment
   - Auto Stigmation / Focus
   - Auto Brightness & Contrast
   - Auto Photo Mode
   - Operating Condition Memory
4. NEW OBJECTIVE LENS DESIGN
   - Resolution improvement
   - Improvement of low kV image
5. X-ray MICROANALYSIS (NEW CHAMBER DESIGN)
   - High X-ray take-off angle of 35°
   - The specimen held at a short working distance of 15mm
6. VARIABLE PRESSURE VACUUM SYSTEM
7. VARIOUS SPECIMEN STAGE
   - 100×50 large eucentric stage
   - Cooling stage

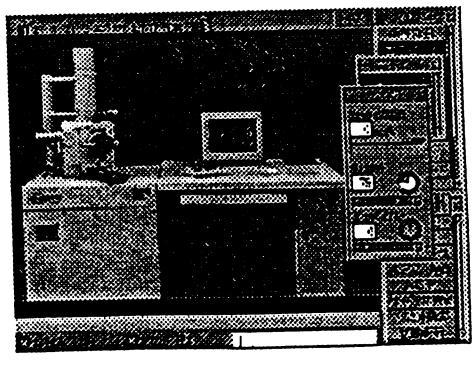

Installation Wire Connections

- Fore Pumps (2) connect to the column console in back -- CN100
- Air Compressor connects to the column console in back -- CN100
- Auto-transformer connects to the column console in back -- CN100
- Display power connects to the column console in back --CN100

CN100

pin--1 pin--2 pin--3	Display
pin--4 pin--5 pin--6	RP 1
pin--7 pin--8 pin--9	RP 2
pin--10 pin--11 pin--12	Air Compressor
pin--13 pin--14 pin--15	Auto-Transformer

- SE Detector (CN26) on the column connects to the Analog PCB located in the Display console
- Robinson Detector (CN300) on the column connects to the Analog PCB located in the Display console
- CN76 from Display console connects to the HVC2 PCB in the column console (HV Tank).
- CN36A from the Display console connects to the Evac PCB in the column console.
- CN112, CN114, & CN120 from the Display console connects to the Evac Seq.2 PCB in the column console.
- CN50 and CN51 from the Display console connects to the CDTB (column distribution) PCB in the column console.

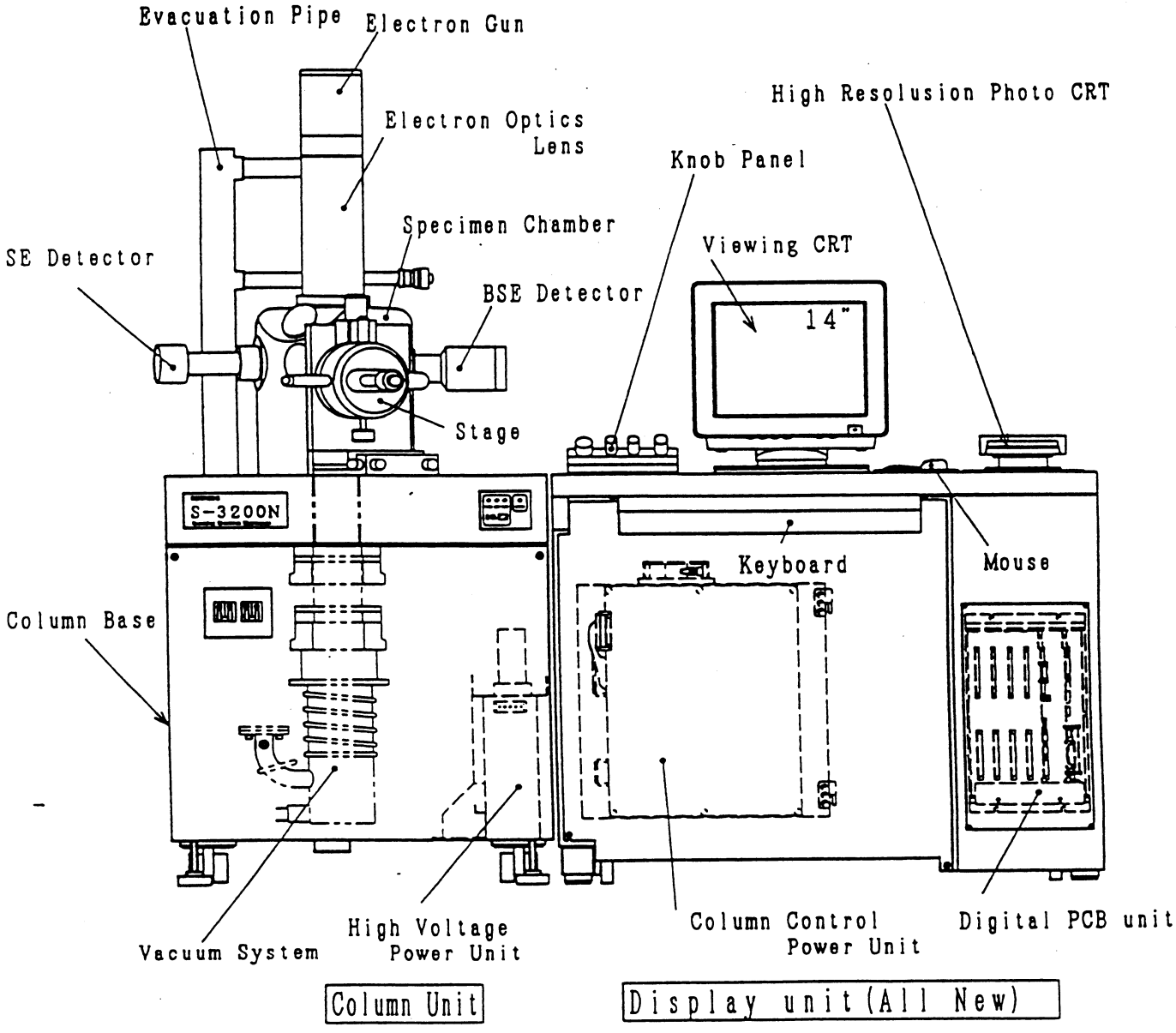

New Design Units of S-3200N

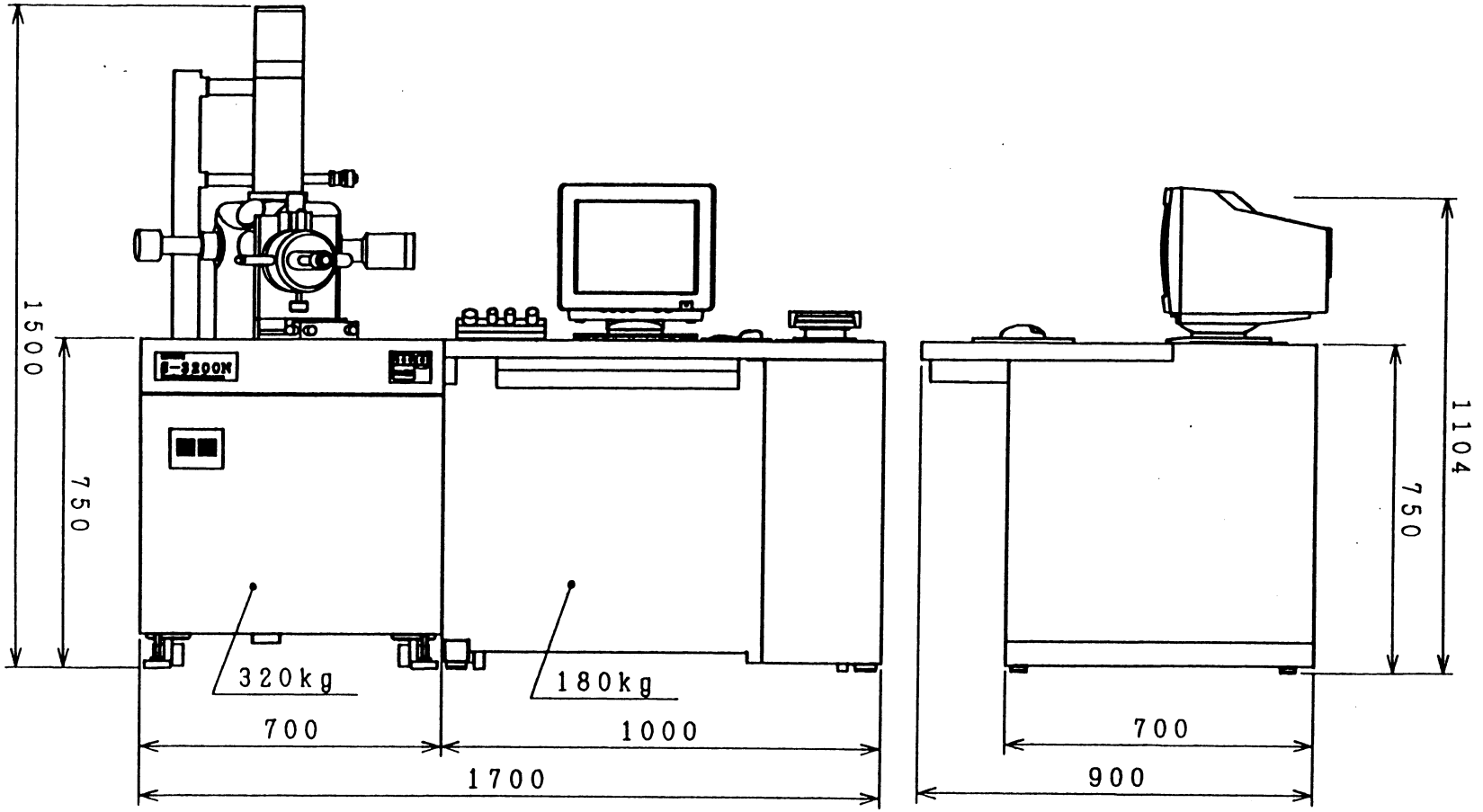

Dimension of S-3200N (unit:mm)

S-3200N.

Multifunction Unit

Multifunction Unit

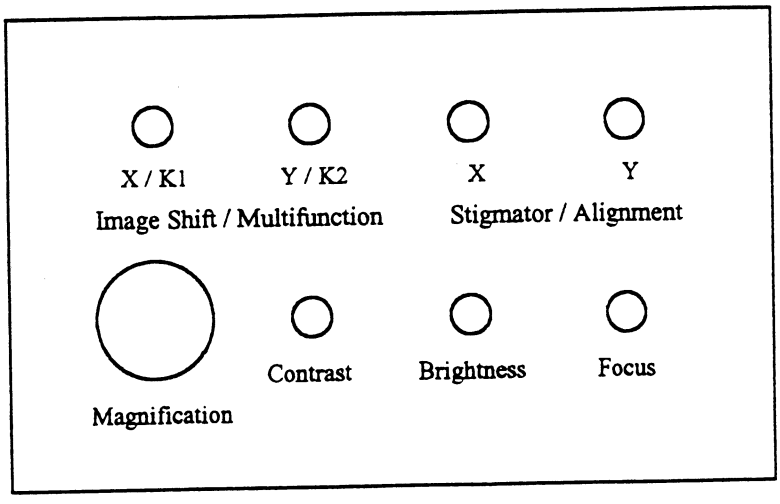

Multifunction Mode Uses:

- Filament
- Gun Bias
- Raster Rotation
- Condenser Lens
- Line Position
- Spot Position
- Dynamic Focus
- Tilt Compensation

S-3200N
Signal Panels on Back of Display

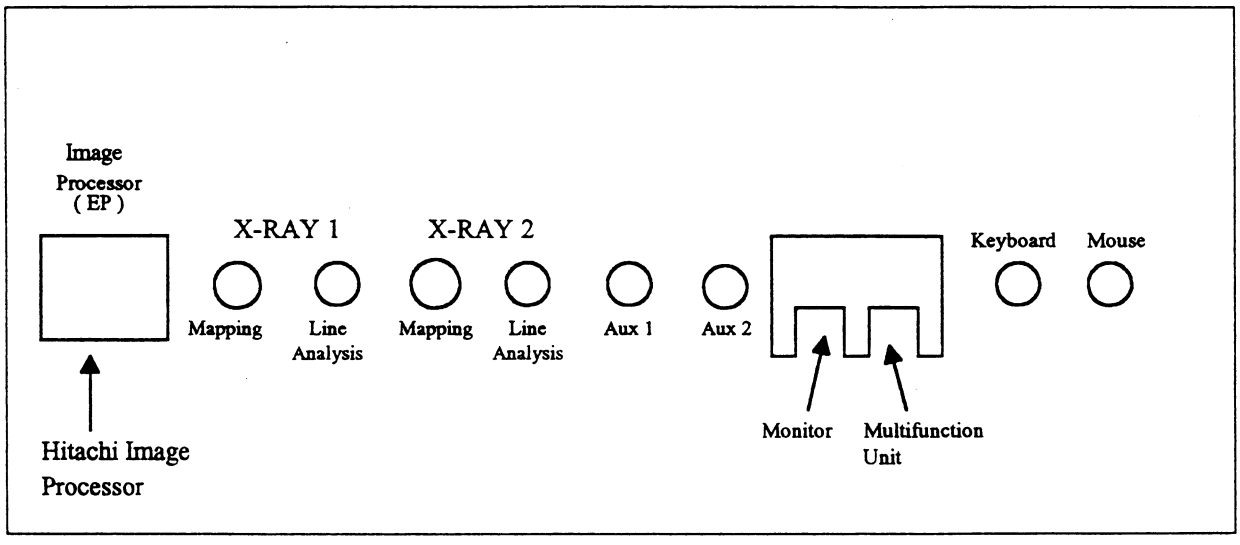

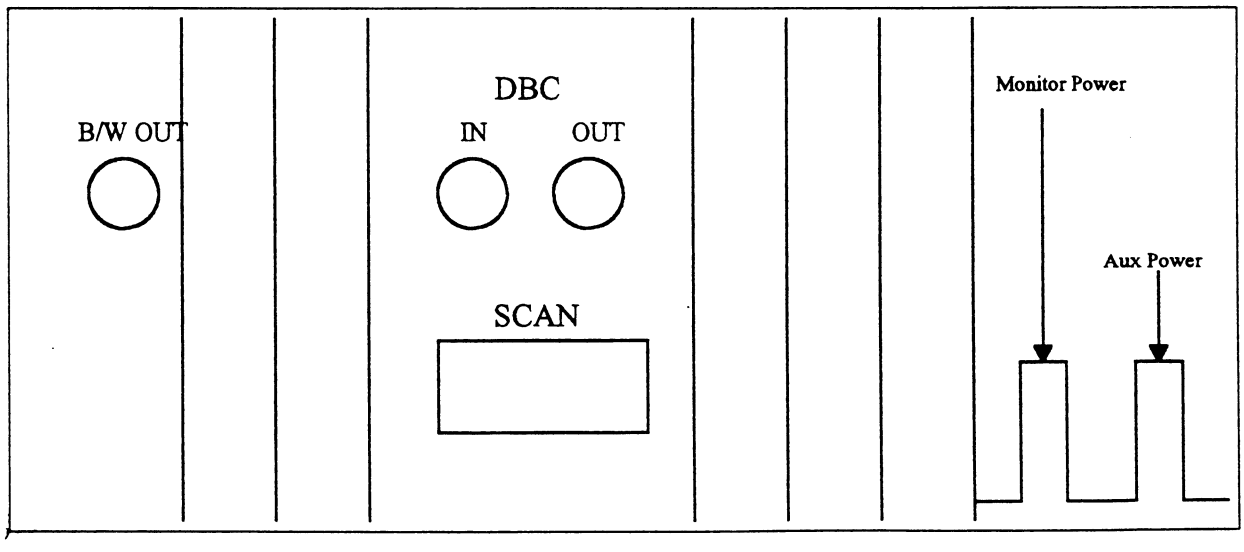

AFS System
Auto Filament Saturation System

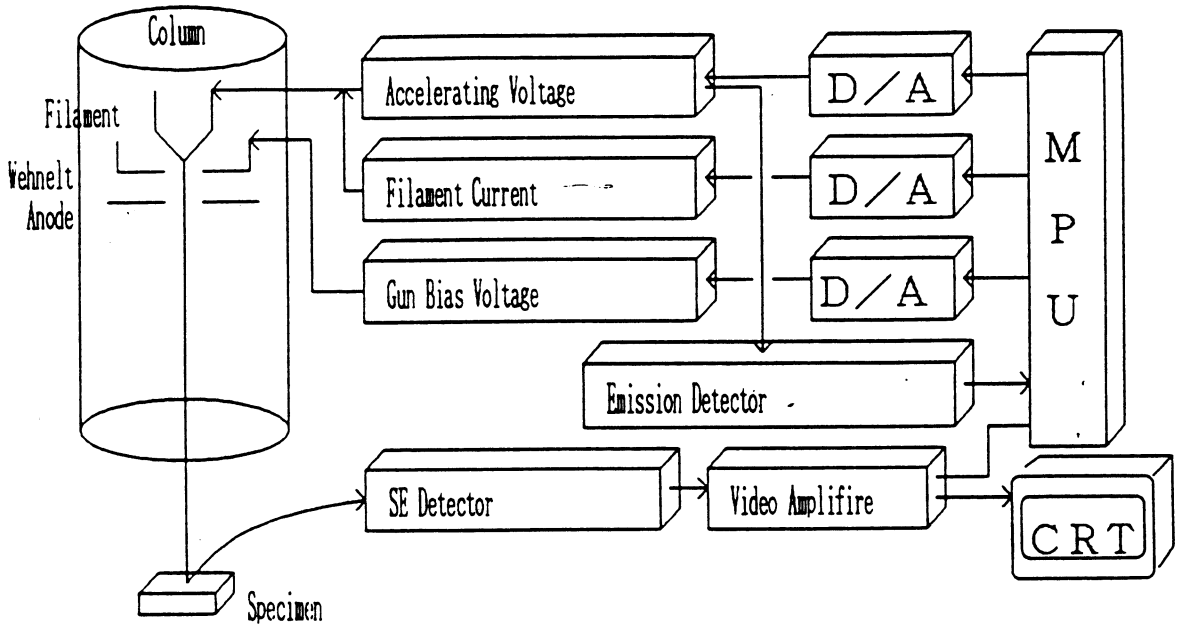

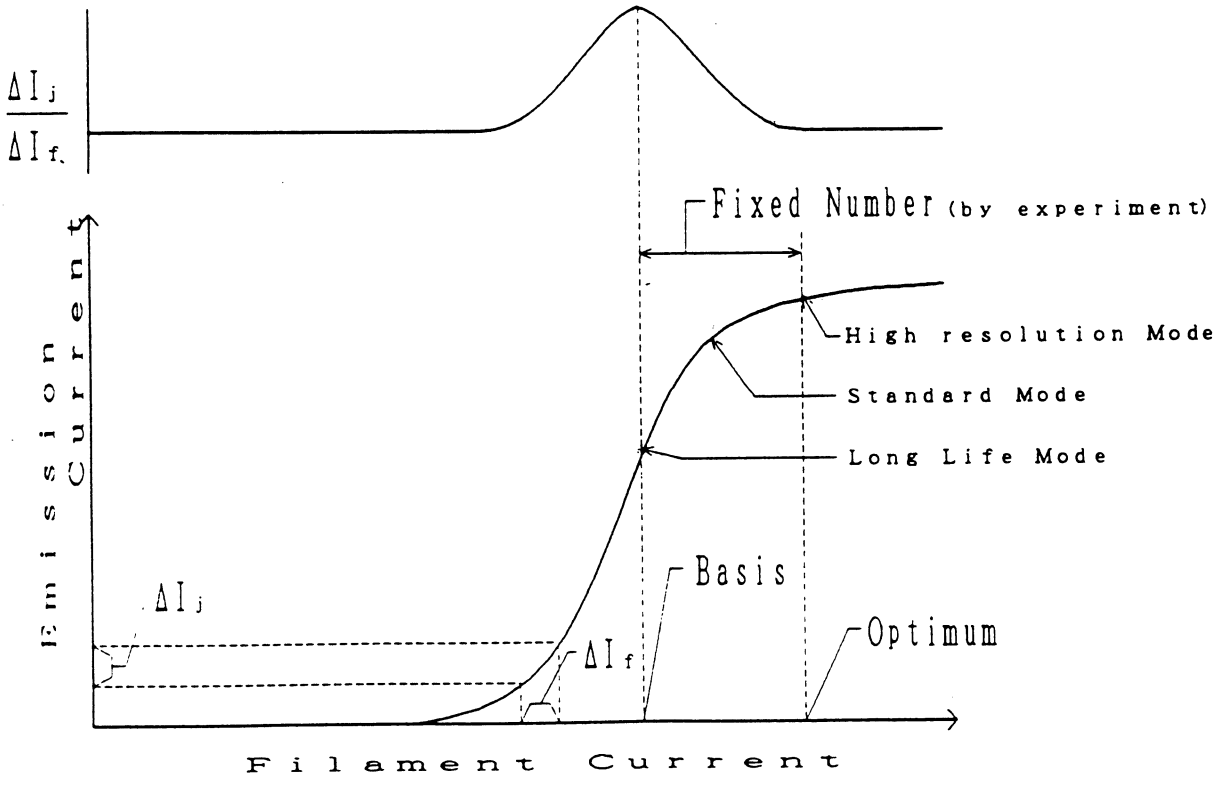

Concept of AFS System

AGA (Auto Gun Alignment)

Adjust gun alignment automatically so that the electron beam centers on the electron optics.

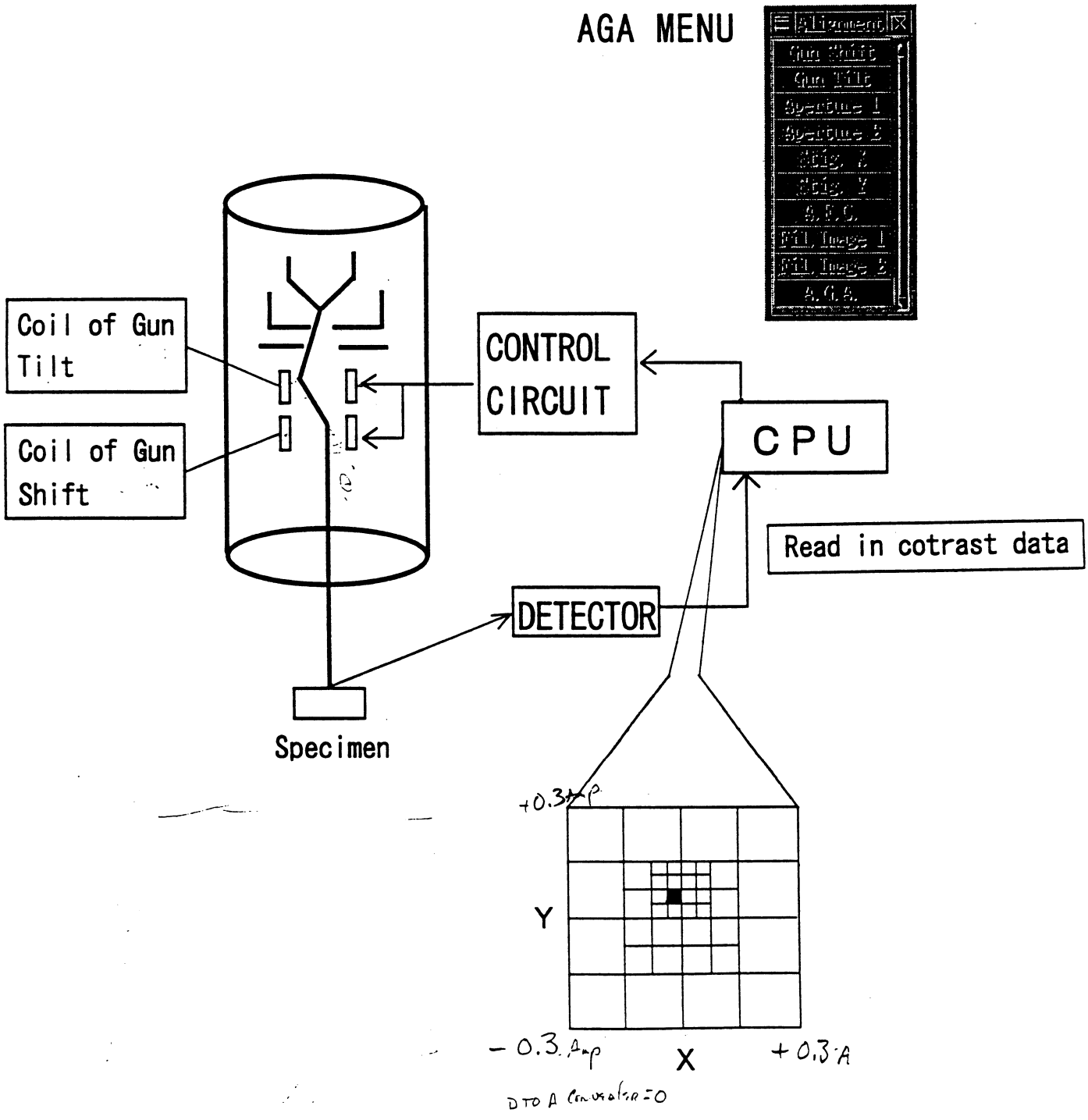

S-3200N Beam Current

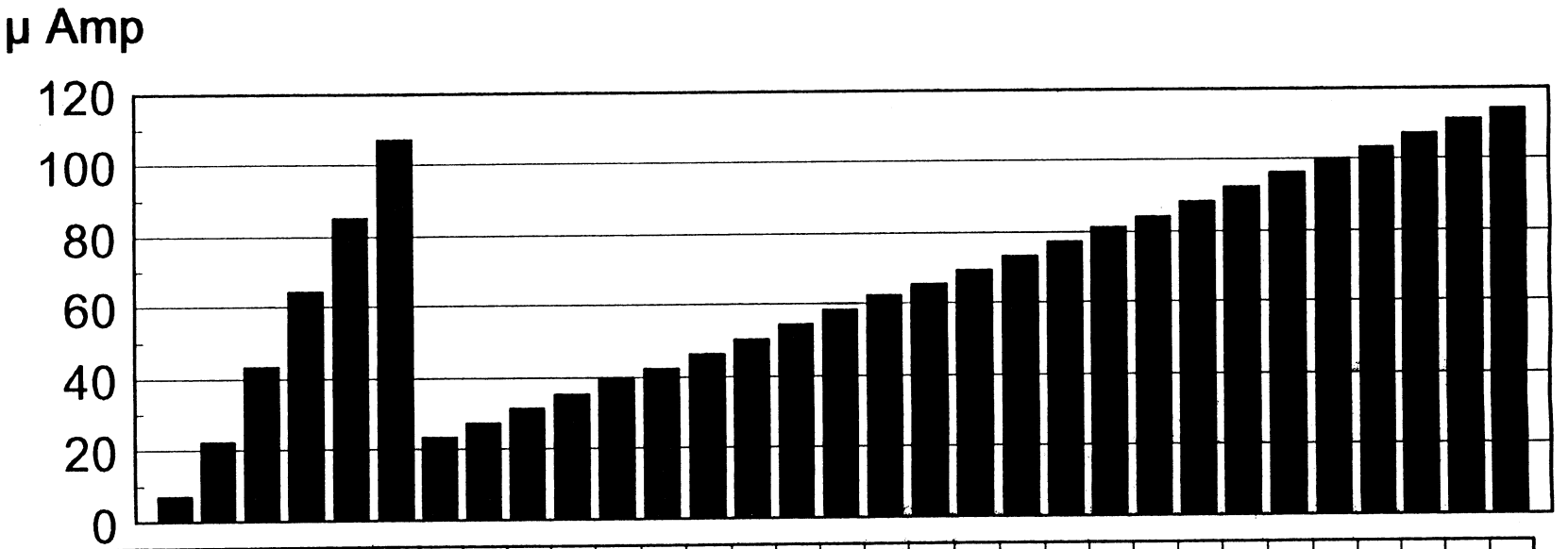

KV	.3	1	2	3	4	5	6	7	8	9	10	11	12	13	14	15	16	17	18	19	20	21	22	23	24	25	26	27	28	29	30
Beam Current	7	22	43	64	85	107	23	27	31	35	39	42	46	50	54	58	62	65	69	73	77	81	84	88	92	96	99	103	107	111	114

Gun Bias=0

Filament Current=80 as read on the software icon.

.3-5Kv=470K ohm Bias Res., 6-30Kv=4M ohm Bias Res.

S-3200N

Specimen Vacuum VS Gun Vacuum

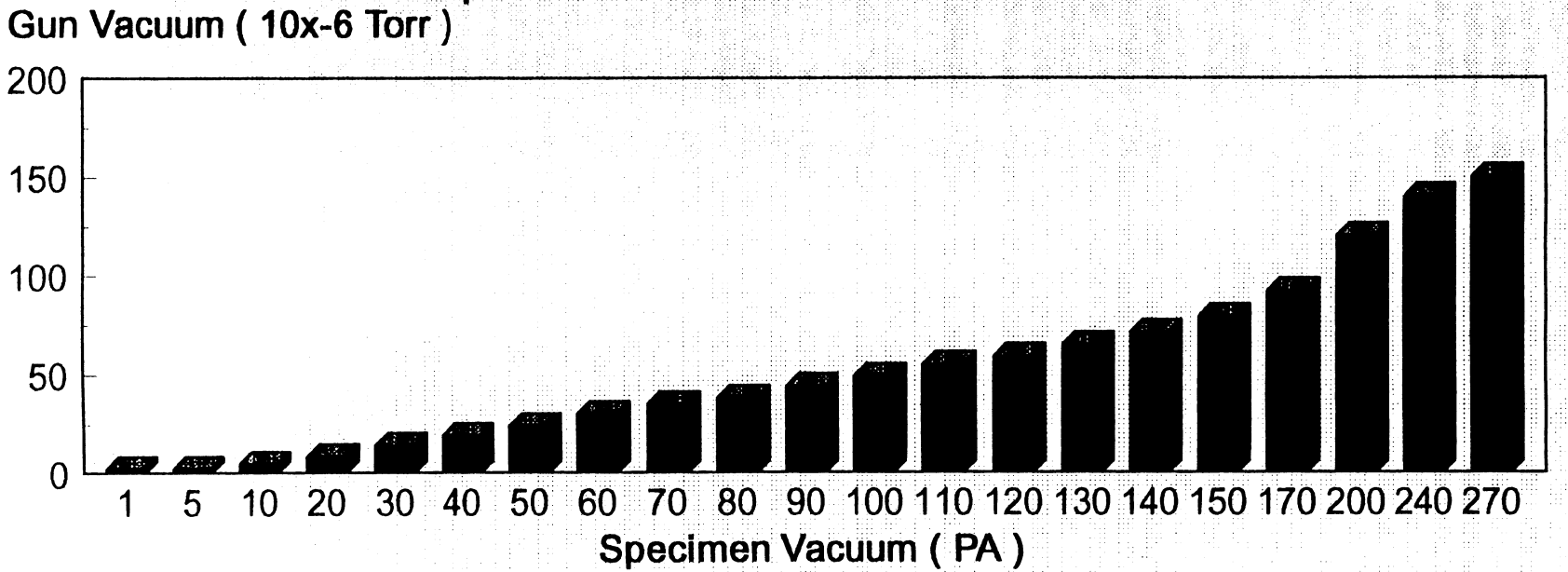

Ultimate Vacuum after 15 Hrs. = 1.3x10-6 Torr
Specimen Pump Down Time = 3min. 10sec.
Time to go to 1 PA from 270 PA = 1min. 30sec.

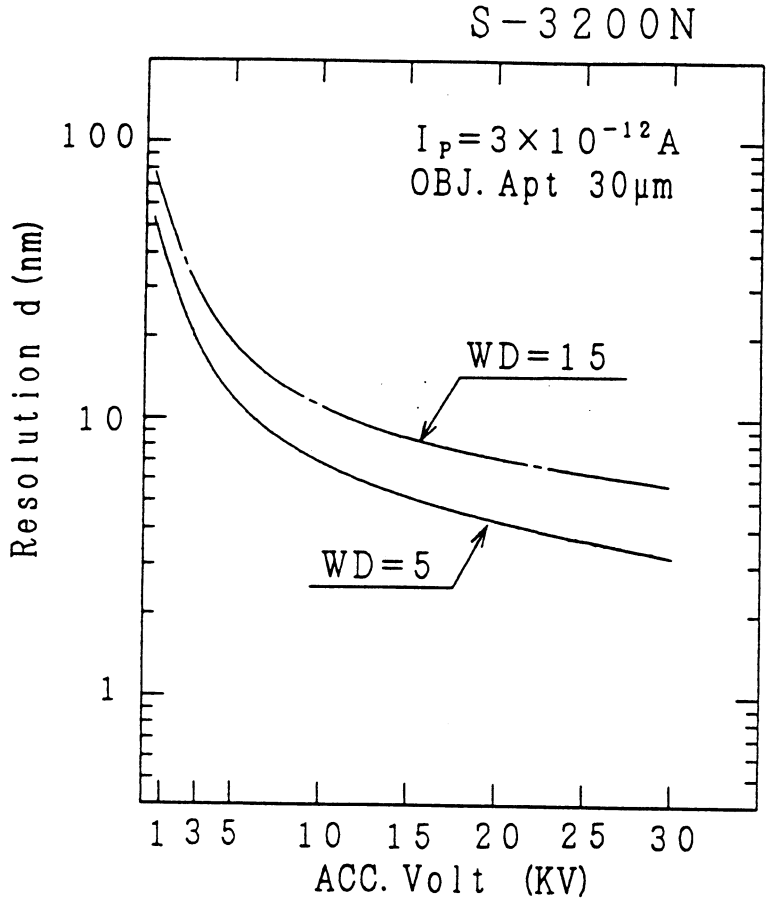

Calculated Resolution of the S-3200N

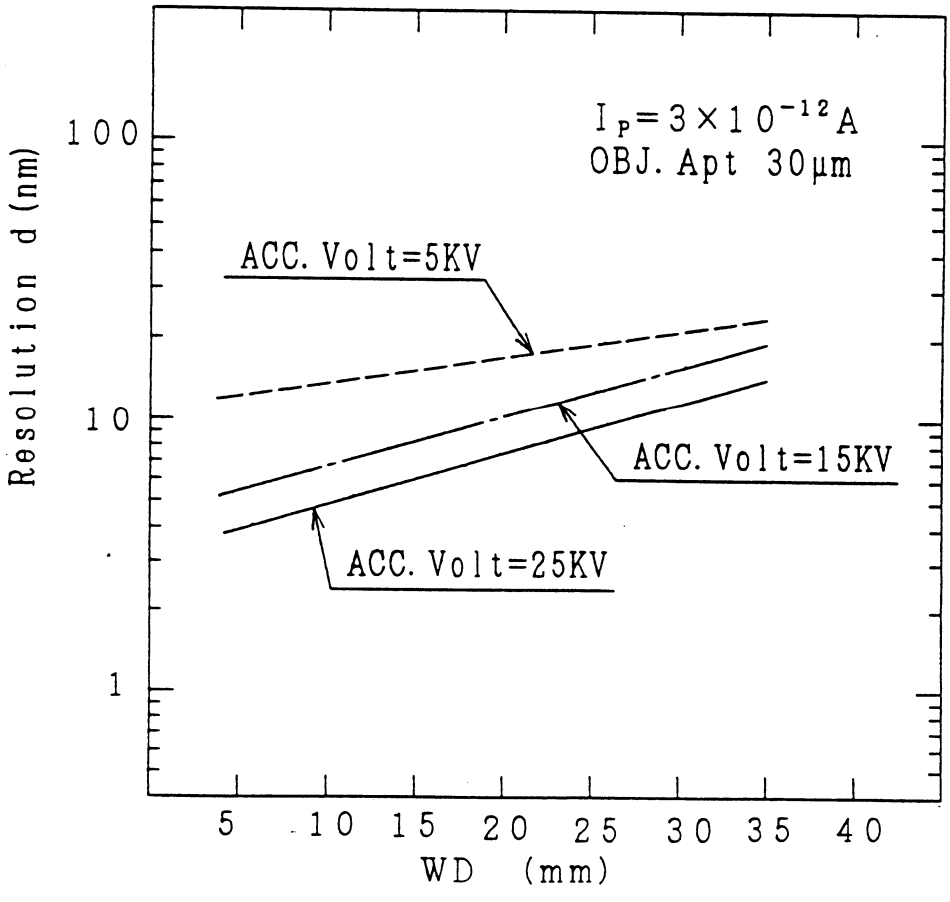

Calculated Resolution of the S-3200N

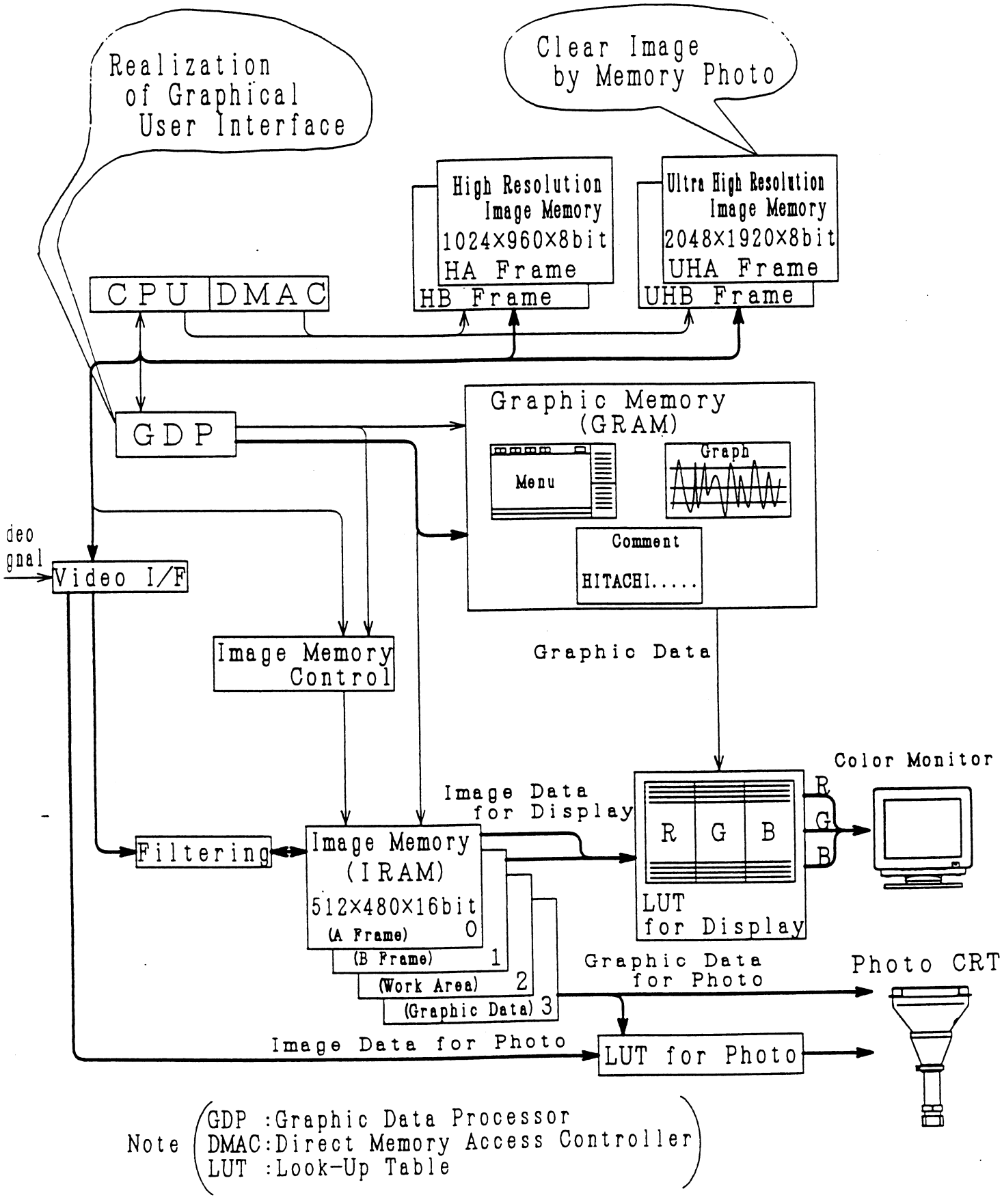

Note (GDP :Graphic Data Processor
DMAC:Direct Memory Access Controller
LUT :Look-Up Table)

Configuration of Image Memory Unit

Chamber of S-3200N(6inch)

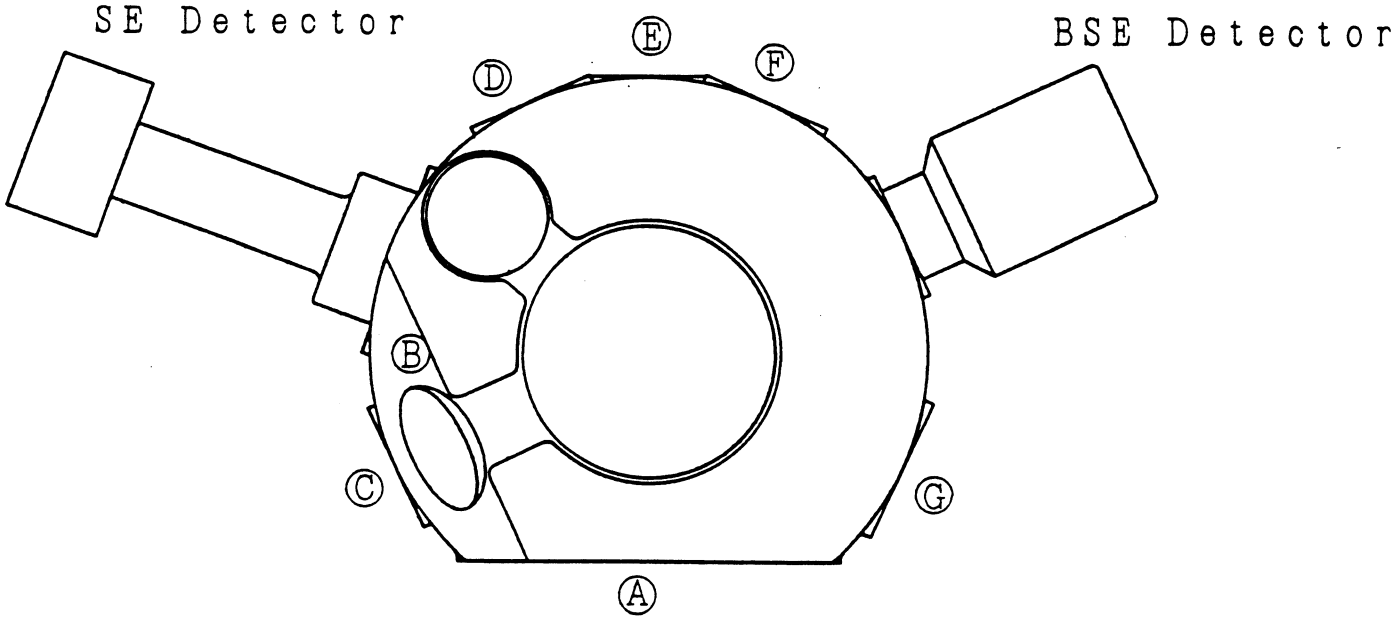

Name	Model	Part No.	Mounting Port
Specimen tensil stage:200kg	S-5757	49E-0142	Ⓐ
Z variable cryogenic system		49E-0232	Ⓐ
Specimen manipulator	S-5744	50E-0240	Ⓒ
Cathodoluminescence detector		48E-0207	ⒹorⒻ
Quartered-semiconductor backscattered electron detector		50E-0100	ⒸorⒻ
Farady cup device	S-5766	48E-0249	ⒸorⒹ
Energy dispersive x-ray detector			Ⓑ

SPECIFICATIONS

1.Resolution	3.5nm(at high vacuum mode) 5.5nm(at low vacuum mode)
2.Magnification	20 to 300,000×
3.Electron Optics	(1)Accelerating voltage 0.3 to 10kV(0.1kV step) 10 to 30kV(1kV step) (2)Electron gun Pre-centered hairpin type filament (3)Bias Self-bias exchangeable + continuously variable (4)Gun alignment 2-stage electromagnetic alignment (5)Lens system 3-lens reduction type(super-conical objective lens) (6)Objective lens aperture Movable aperture (4 openings selectable and finely adjustable) (7)Stigmator coil 8-pole electromagnetic type (8)Deflection coil 2-stage electromagnetic deflection type(X,Y)
4.Specimen Size	150mm dia.(MAX)
5.Specimen Stage	Any one of the specimen stages(1),(2),(3) and (4) below is equipped. (1)Super eucentric stage X-traverse: 0 to 32mm(continuous) Y-traverse: 0 to 32mm(continuous) Tilt angle: -90° to 90° (continuous) Rotation angle: 360° (continuous) Z-traverse: 5 to 35mm(continuous) 10 to 35mm(with BSE detector) (2)Large-size standard stage X-traverse: 0 to 80mm(continuous) Y-traverse: 0 to 40mm(continuous) Tilt angle: -20° to 90° (continuous) Rotation angle: 360° (continuous) Z-traverse: 5 to 35mm(continuous) 10 to 35mm(with BSE detector) (3)Large-size eucentric stage X-traverse: 0 to 100mm(continuous) Y-traverse: 0 to 50mm(continuous) Tilt angle: 0° to 60° (continuous) Rotation angle: 360° (continuous) Z-traverse: 5 to 35mm(continuous) 10 to 35mm(with BSE detector)

9. Evacuation System	(1) Sequence control Full-auto pneumatic valve system (2) Low vacuum control Automatic (real-time vacuum feed-back system) (3) Vacuum detection With Pirani gauge (4) Ultimate vacuum 6×10^{-4} Pa (5) Low vacuum setting & indication On menu screen (6) Low vacuum range 1 to 270Pa (7) Evacuation time About 3min (8) Vacuum pump Oil rotary pump (160l/min) × 2 Oil diffusion pump (570l/sec) × 1 (9) Air compressor
10. X-ray Analysis Position	Take Off Angle: 35° (at WD15mm)
11. Video Out	NTSC-TV signal (B/W)
12. Safety Device	Protection against power, water and vacuum failures
13. Water Supply and Drain	(1) Water flow rate 1 to 1.5l/min (2) Water pressure 50 to 100kPa (0.5 to 1kgf/cm²) (3) Water temperature 10 to 20℃
14. Dimensions	(1) Main console 700 (W) × 700 (D) × 1500 (H) mm, 320kg (2) Display unit 1000 (W) × 900 (D) × 1104 (H) mm, 180kg

(4) Cool stage

X-traverse:	0 to 15mm(continuous)
Y-traverse:	0 to 15mm(continuous)
Tilt angle:	-45° to 45° (continuous)
Rotation angle:	unavailable
Z-traverse:	10 to 35mm
Temperature range:	-10 to 10℃

6. Detector

(1) Secondary electron detector

(2) High-sensitivity(Robinson type) backscattered electron detector

7. Operation

Graphical User Interface with mouse
(operation with rotary knob and keyboard available)

8. Image Display

(1) Principle

Flicker-free image display with built-in image memory

(2) Frame memory

512×480pixel×16bit
2048×1920pixel×8bit

(3) Viewing CRT

14-inch TV monitor(Color)

(4) Photo CRT

7-inch Ultrahigh resolution CRT(B/W)

(5) Scanning mode

TV scan
SLOW scan
PHOTO scan
Selected area scan
Waveform monitor/signal monitor
TWIN scan
Dual-Mag scan

(6) Scan speed

TV:	Y=0.033sec(X=0.064msec,LINES=500)	
SLOW1:	Y=0.35sec(X=0.7msec,LINES=500)	
SLOW2:	Y=2sec(X=4msec,LINES=500)	
SLOW3:	Y=10/8.4sec(X=20/16.7msec,LINES=500)	*
SLOW4:	Y=20/25sec(X=40/50msec,LINES=500)	*
S.A:	Y=40msec(X=0.35msec,LINES=125)	
PHOTO1:	Y=40/34sec(X=20/16.7msec,LINES=2000)	*
PHOTO2:	Y=80/100sec(X=40/50msec,LINES=2000)	*
PHOTO3:	Y=200/200sec(X=100/100msec,LINES=2000)	*
PHOTO4:	Y=400/400sec(X=200/200msec,LINES=2000)	*

*Power-synchronous scan:50/60Hz region

(4) Cool stage

X-traverse:	0 to 15mm (continuous)
Y-traverse:	0 to 15mm (continuous)
Tilt angle:	-45° to 45° (continuous)
Rotation angle:	unavailable
Z-traverse:	10 to 35mm
Temperature range:	-10 to 10℃

6. Detector

(1) Secondary electron detector

(2) High-sensitivity (Robinson type) backscattered electron detector

7. Operation

Graphical User Interface with mouse
(operation with rotary knob and keyboard available)

8. Image Display

(1) Principle

Flicker-free image display with built-in image memory

(2) Frame memory

512×480pixel×16bit
2048×1920pixel×8bit

(3) Viewing CRT

14-inch TV monitor (Color)

(4) Photo CRT

7-inch Ultrahigh resolution CRT (B/W)

(5) Scanning mode

TV scan
SLOW scan
PHOTO scan
Selected area scan
Waveform monitor/signal monitor
TWIN scan
Dual-Mag scan

(6) Scan speed

TV:	Y=0.033sec (X=0.064msec, LINES=500)	
SLOW1:	Y=0.35sec (X=0.7msec, LINES=500)	
SLOW2:	Y=2sec (X=4msec, LINES=500)	
SLOW3:	Y=10/8.4sec (X=20/16.7msec, LINES=500)	*
SLOW4:	Y=20/25sec (X=40/50msec, LINES=500)	*
S.A:	Y=40msec (X=0.35msec, LINES=125)	
PHOTO1:	Y=40/34sec (X=20/16.7msec, LINES=2000)	*
PHOTO2:	Y=80/100sec (X=40/50msec, LINES=2000)	*
PHOTO3:	Y=200/200sec (X=100/100msec, LINES=2000)	*
PHOTO4:	Y=400/400sec (X=200/200msec, LINES=2000)	*

*Power-synchronous scan: 50/60Hz region

(7) Auto mode
Auto filament saturation(Auto emmision current)
Auto gun alignment
Auto focus
Auto stigmator
Auto brightness/contrast control
Auto start(HV-on→ABC→AFC)
Auto photo(1:AFC→ABC→PHOTO)
(2:ABC→PHOTO)

(8) Signal processing
Recursive filter(TV,SLOW1 and SLOW2 scans)
Image integration(TV,SLOW1 and SLOW2 scans)
Brightness conversion
Gamma control(digital)
Polarity reversion(digital)
Histgram
Quartered frame copying
Digital zoom

(9) Data entry
Arbitrary alphanumeric characters and symbols overlayable at any image position through keyboard

(10) Auto data display
Accelerating voltage,magnification,micron scale, micron value,film number,WD value,time,date and low vacuum set value printable on film

(11) Operation assist functions
Preset magnification
Wobbler mode
Registration of column conditions
(15 conditions×50 sets)
Focus search mode
Focus memory
Polarity reversion(analog)
Differential image(analog)
Gamma control(analog)
Setting brightness/contrast for ABC
Setting brightness/contrast for photo
Setting film ASA
Setting photo ratio
Scan indicator
Filament image
Display of condition table

9. Evacuation System	(1) Sequence control Full-auto pneumatic valve system (2) Low vacuum control Automatic (real-time vacuum feed-back system) (3) Vacuum detection With Pirani gauge (4) Ultimate vacuum 6×10^{-4} Pa (5) Low vacuum setting & indication On menu screen (6) Low vacuum range 1 to 270Pa (7) Evacuation time About 3min (8) Vacuum pump Oil rotary pump (160l/min) × 2 Oil diffusion pump (570l/sec) × 1 (9) Air compressor
10. X-ray Analysis Position	Take Off Angle: 35° (at WD15mm)
11. Video Out	NTSC-TV signal (B/W)
12. Safety Device	Protection against power, water and vacuum failures
13. Water Supply and Drain	(1) Water flow rate 1 to 1.5l/min (2) Water pressure 50 to 100kPa (0.5 to 1kgf/cm^2) (3) Water temperature 10 to 20℃
14. Dimensions	(1) Main console 700 (W) × 700 (D) × 1500 (H) mm, 320kg (2) Display unit 1000 (W) × 900 (D) × 1104 (H) mm, 180kg

OPTIONAL ACCESSORIES

(1)Specimen Stages

Part No.	Article	Description
49E-0142	S-5757 200kg specimen tensile stage	Tensile load:200kg max. Exclusive goniometer stage Order tensile load measuring device and stage adapter together with this stage. Recorder(or voltmeter) is to be prepared by customer.
47E-5224	Tensile load measuring device	For S-5757 Semiconductor load converter and DC amplifier
50E-3051	Cool stage	Stage + control unit -10～10℃(1℃step)
49E-0232	Z variable cryogenic system	For observing frozen specimen Charge for installation is included in price of this system. Oil rotary pump is to be prepared by customer.
47E-5229	S-4078 Evaporation unit	For cryogenic system Only gold coating possible.
50E-0410	Stage motor drive unit SⅡ	For use with 5″ stage. Order together with touch sensor (P/N 50E-0426)
50E-0411	Stage motor drive unit SⅡ	For use with large-sized eucentric stage. Order together with touch sensor (P/N 50E-0426)
50E-0426	Touch sensor	For use with S1 and SⅡ
49E-0645	Stage motor drive unit S1	For use with 5″ stage. Order together with touch sensor (P/N 50E-0426)
50E-0240	Specimen manipulator	
47E-0244	Specimen holder (four 15mm dia. specimens)	For 5″ stage and large-sized eucentric stages
47E-0245	Specimen holder (twenty-one 6mm dia. specimens)	

(2)Display Units

Part No.	Article	Description
50E-0202	English/Japanese menu changeable function	Order together with main unit.
50E-0204	Raster rotation/dynamic focus/tilt compensation unit	
50E-0205	Image filing 3.5-inch magneto-optical disk device(type 230MB)	(1)3.5-inch magneto-optical disk device (2)One 3.5-inch magneto-optical disk (3)Cleaning kit
50E-0206	3.5-inch magneto-optical disk(type 230MB)	For P/N50E-0205(preformatted)
50E-0207	RS-232C communication interface	Order together with main unit.
50E-0208	Simple measurement /graphic input function	Order together with main unit.
50E-0209	Pseudo color function	Order together with main unit.

(3)Detectors

Part No.	Article	Description	
48E-0204	S-6542 Absorbed electron detector	For 5″stage Preamp only	Each detector includes no video amp.So order P/N50E-0201 together(one unit required for up to 3 detectors).
48E-0326	24-pin IC holder	Usable for 5″stage only	
48E-0207	S-5744 Cathodeluminescence detector	Detector+Preamp Order P/N50E-0200 together.	
50E-0100	Quartered-semiconductor backscattered electron detector	For S-3200N only	
50E-0200	Photomultiplier power supply	For S-5744	
50E-0201	Video amp unit	For S-6542/S-5744/quartered-semiconductor backscattered electron detector	

(4)Camera and Film

Part No.	Article	Description
50E-0250	Camera body	S-5080A Camera and ×1adapter
50E-0251	6×7 Roll film unit	Combined with camera body. Consists of roll film holder, ×0.6adapter and focusing glass.
50E-0252	107(105) Polaroid unit	Combined with camera body. Consists of 107 Polaroid film holder, ×0.8 adapter and focusing glass.
50E-0254	4″×5″ Polaroid unit (8 exposures)	Combined with camera body. Consists of 4″×5″ Polaroid film holder (8 exposures) and focusing glass.
50E-0253	4″×5″ Polaroid unit (1 exposure)	Combined with camera body. Consists of 4″×5″ Polaroid film holder (1 exposure) and focusing glass.

Unit Name / Camera Unit	P/N	Camera Body	6×7 Roll	107 Polar.	4″×5″ Polaroid
		50E-0250	50E-0251	50E-0252	50E-0254or50E-0253
Purchase of 6×7 only		○	○		
Purchase of 107 only		○		○	
Purchase of 4″×5″ cnly		○			○
Purchase of 6×7&107		○	○	○	
Purchase of 6×7&4″×5″		○	○		○
Purchase of 107&4″×5″		○		○	○
Purchase of 6×7,107& 4″×5″		○	○	○	○

(5)Items for X-ray Elemental Analysis

Part No.	Article	Description
50E-0210	X-ray mode function	
48E-0249	Farady cup unit	
50E-0340	Movable objective aperture plate for EDX	Used for excluding system peak
48E-0446	Antivibration rubber pad for EDX	Necessary for mounting EDX analyzer.
50E-0212	DBC interface unit	

HS
6.12.
富澤

NOT USE

主要基板ＶＲ・ＳＷ・ＪＰ設定表

基板名	ＳＷ・ＶＲ名	内容		
ＳＨ－ＳＢＣ (150E2110)	ＳＷ１Ａ	0 : N-SEM & W		8 :
		1 : N-SEM & LaB6		9 :
		2 : H-SEM & W		A :
		3 : H-SEM & LaB6		B :
		4 : UPD & W		C :
		5 : UPD & LaB6		D :
		6 :		E :
		7 :		F :
	ＳＷ１Ｂ	0 :		8 :
		1 :		9 :
		2 :		A :
		3 :		B :
		4 :		C :
		5 :		D :
		6 :		E :
		7 :		F :
	ＳＷ２ JAPANESE Ver		ＯＦＦ	ＯＮ
		1	日本語メニュー	英語メニュー
		2		
		3	Ｘ線モード無し	Ｘ線モード有り
		4	疑似カラー無し	疑似カラー有り
		5		
		6		
		7		
		8	日本語／英語切替なし	日本語／英語切替あり
	ＳＷ３	1	Ｒ．Ｒ無し(None)	Ｒ．Ｒ有り
		2	RS-232C無し(〃)	RS-232C有り
		3	SCSI無し(〃)	SCSI有り
		4		
		5	低真空0-270Pa	低真空0-530Pa
		6	ﾌﾟﾆｭﾗ(BSE2)無し(None)	ﾌﾟﾆｭﾗ(BSE2)有り
		7	MOD無し (〃)	MOD有り
		8	ｸﾞﾗﾌｨｯｸ無し	ｸﾞﾗﾌｨｯｸ有り
	ＳＷ４	1		
		2		
		3		
		4		
		5		
		6		
		7		
		8		
	ＪＰ１	ＳＨＯＲＴ：ＷＤＴ有り		
		ＯＰＥＮ　：ＷＤＴ無し（デバッグ用）		
	ＪＰ２	ＳＨＯＲＴ：ブザー音大		
		ＯＰＥＮ　：ブザー音小		
ＡＮＡＬＯＧ (150E2102)	ＶＲ１	SLOW3,4:SG-X CYCLE(THX=4ms,TP3)		
	ＶＲ２	SLOW2 :SG-X CYCLE(TX=4ms,TP3)		
	ＶＲ３	SLOW1 :SG-X CYCLE(TX=0.7ms,TP3)		
	ＶＲ４	SLOW1-4:SG-Y AMPLITUDE(9.12V,TP4)		
	ＶＲ５	SPLIT・DUALMAG:SG-X AMPLITUDE(10.8V,TP9)		
	ＶＲ６	AFC-SCAN:X AMPLITUDE(12V,TP5)		
	ＶＲ７	X-RAY MODE:X POSITION(V-=-10.9V,TP9)		
	ＶＲ８	AFC-SCAN:Y AMPLITUDE(8.8V,TP6)		
	ＶＲ９	X-RAY MODE:Y POSITION(V-=-9.6V,TP10)		
	ＶＲ１０	PHOTO-CRT:X AMPLITUDE		
	ＶＲ１１	PHOTO-CRT:X POSITION		
	ＶＲ１２	PHOTO-CRT:Y AMPLITUDE		
	ＶＲ１３	PHOTO-CRT:Y POSITION		
	ＶＲ１４	X-RAY MODE:X AMPLITUDE(V+=10V,TP9)		
	ＶＲ１５	X-RAY MODE:Y AMPLITUDE(V+=8.7V,TP10)		

ENGLISH Ver.

No X-ray MODE

No. Pseudo Color

No English / Japanese MENU

X-ray MODE

Pseudo Color

English / Japanese select

MENU△JP

MENU△US

No. MESURE / Graphic

(ANALOG)	VR16	(MAG-X:UPD)
	VR17	MAG-X
	VR18	ORTHOGONAL ADJ.
	VR19	(ORTHOGONAL ADJ.:UPD)
	VR20	(MAG-X:UPD)
	VR21	MAG-Y
	VR22	TV-SCAN:X AMPLITUDE
	VR23	TV-SCAN:X POSITION
	VR24	TV-SCAN:Y AMPLITUDE
	VR25	TV-SCAN:Y POSITION
	VR26	ABC-CONTRAST:ADC LEVEL
	VR27	ABC-BRIGHTNESS:ADC LEVEL
	VR28	LINE-ANALYSIS1 AMPLITUDE
	VR29	LINE-ANALYSIS1 POSITION
	VR30	LINE-ANALYSIS2 AMPLITUDE
	VR31	LINE-ANALYSIS2 POSITION
	VR32	TV-SCAN:MEMORY AREA
	VR33	PHOTO-CRT BRIGHTNESS(COURSE)
	VR34	PHOTO-CRT BRIGHTNESS(FINE)
	VR40	BSE1 SIGNAL:GAIN
	JP1	SHORT：DBC無し OPEN　：DBC有り（X－SCAN）
	JP2	SHORT：DBC無し OPEN　：DBC有り（Y－SCAN）
	JP3	SHORT：R．R無し OPEN　：R．R有り（X－SCAN）
	JP4	SHORT：R．R無し OPEN　：R．R有り（Y－SCAN）
	JP5	SHORT：DBC無し OPEN　：DBC有り（BLK） Composite Blanking
	JP6	SHORT：DBC無し OPEN　：DBC有り（VIDEO）
	JP7	ALWAYS　SHORT
DEF／LENS (150E2103)	VR1	OBJ－SPAN
	VR3	COND1－SPAN
	VR4	COND2－SPAN
	VR5	TV－X　：MAG　CENTER
	VR6	SLOW－X：MAG　CENTER
	VR7	TV－Y　：MAG　CENTER
	VR8	SLOW－Y：MAG　CENTER
	VR10	REFERENCE：＋10V（TP1）
HVC2 (150E2125)	VR1	ACC．VOLTAGE　ADJ．
	VR2	FIL．CURRENT　ADJ．
	VR3	FREQUENCY（32μs）
SEQ2 (250E2132)	VR1	GUN-VACUUM LEVEL ADJ.
	VR2	CHAMBER-VACUUM LEVEL ADJ.
	VR3	SPECIMEN-CHANGER VACUUM ADJ.
	JP1	1－2　SHORT：HIGH 2－3　SHORT：NATURAL
	JP2	SHORT：UTW無し OPEN：UTW有り
	JP3	1－2　SHORT：W電子銃 2－3　SHORT：LaB$_6$電子銃
	JP4	1－2　SHORT：W電子銃 2－3　SHORT：LaB$_6$電子銃
	JP5	ALWAYS　SHORT
	JP6	SHORT：アニュラー無し OPEN　：アニュラー有り
	JP7	SHORT：ROBINSON無し OPEN　：ROBINSON有り
	JP8	SHORT：試料交換装置無し OPEN　：試料交換装置有り

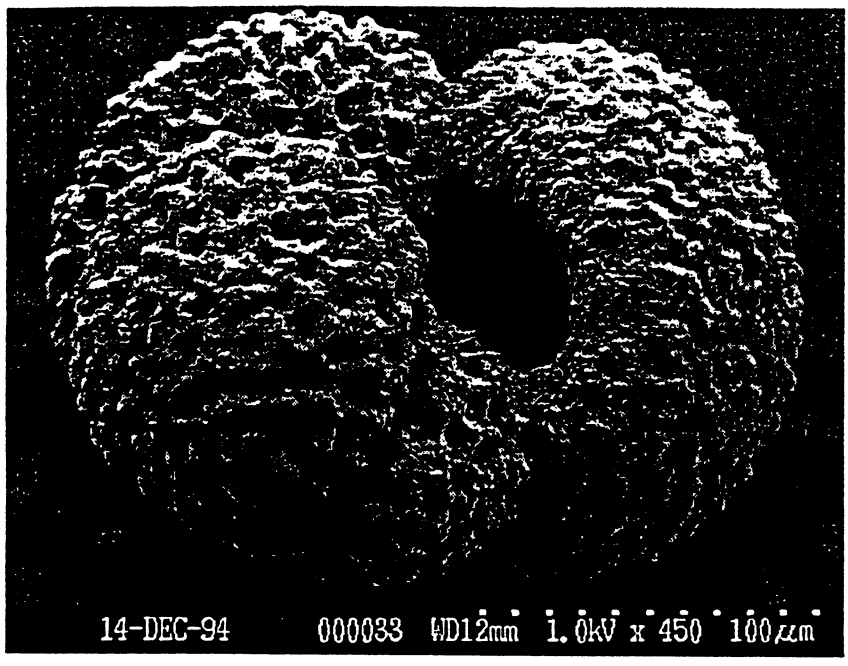

Accelerating voltage
: 1 kV
Specimen
:

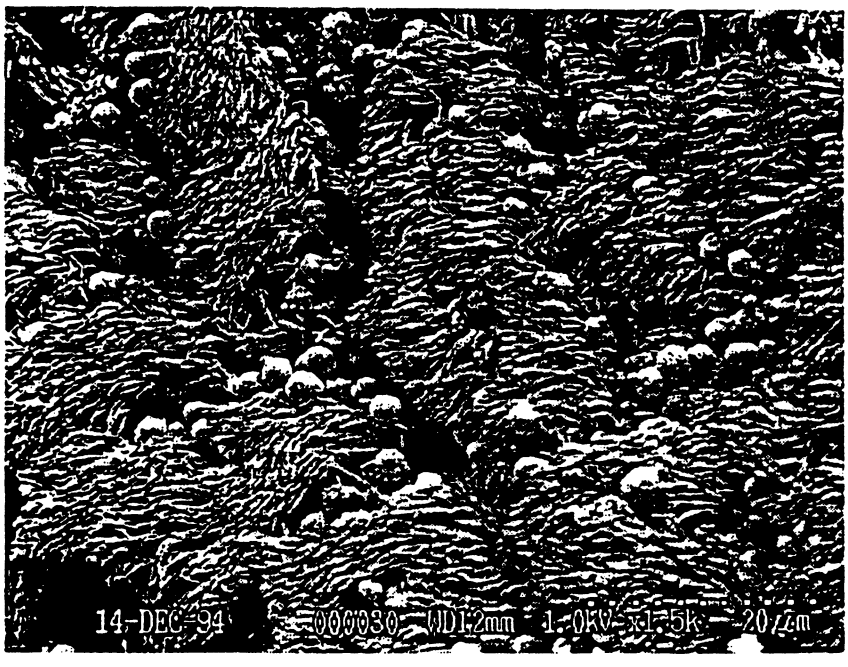

Accelerating voltage
: 1 kV
Specimen
: Bronchus of mouse

Improvement of Low kV

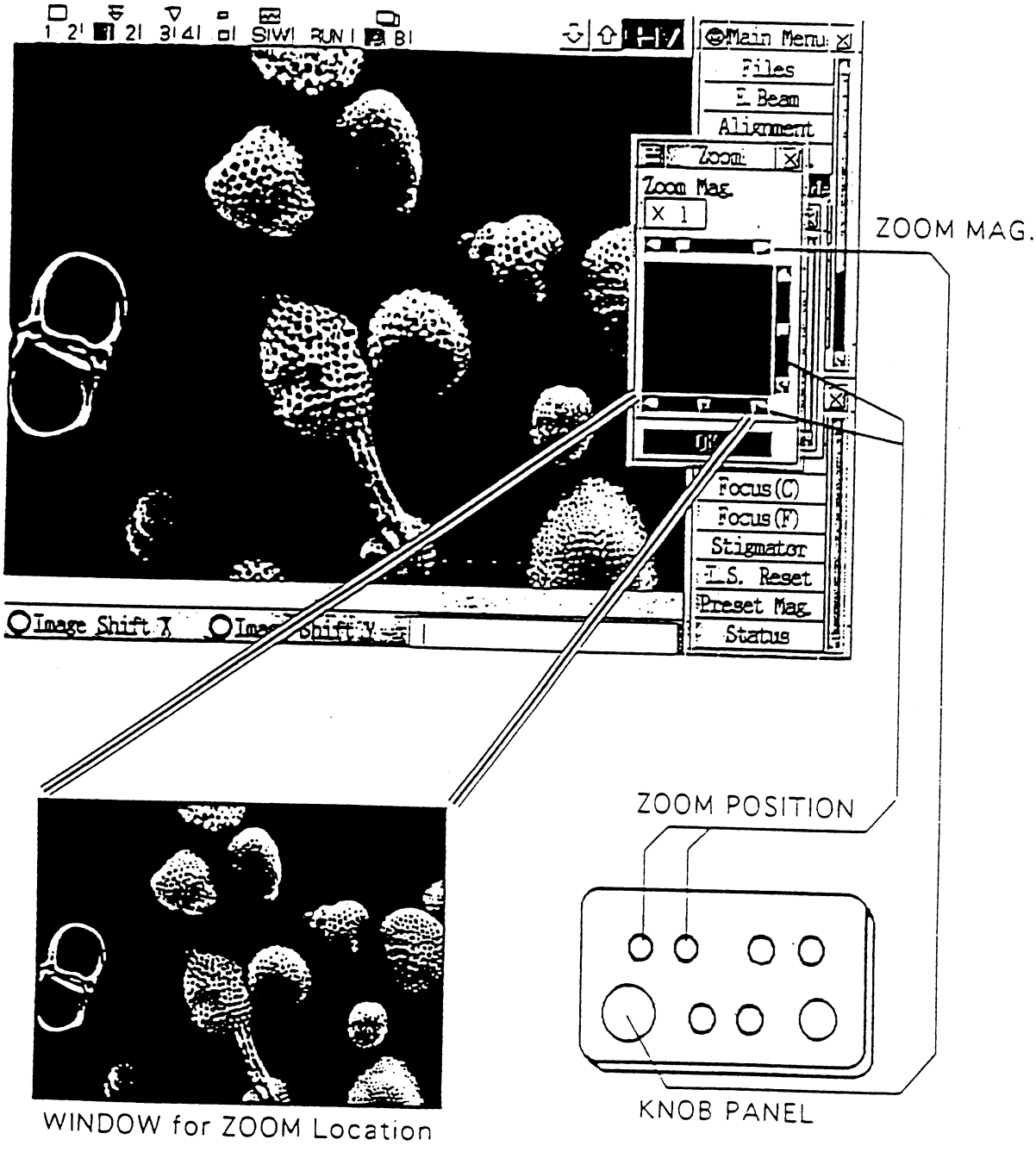

Digital ZOOM (1)

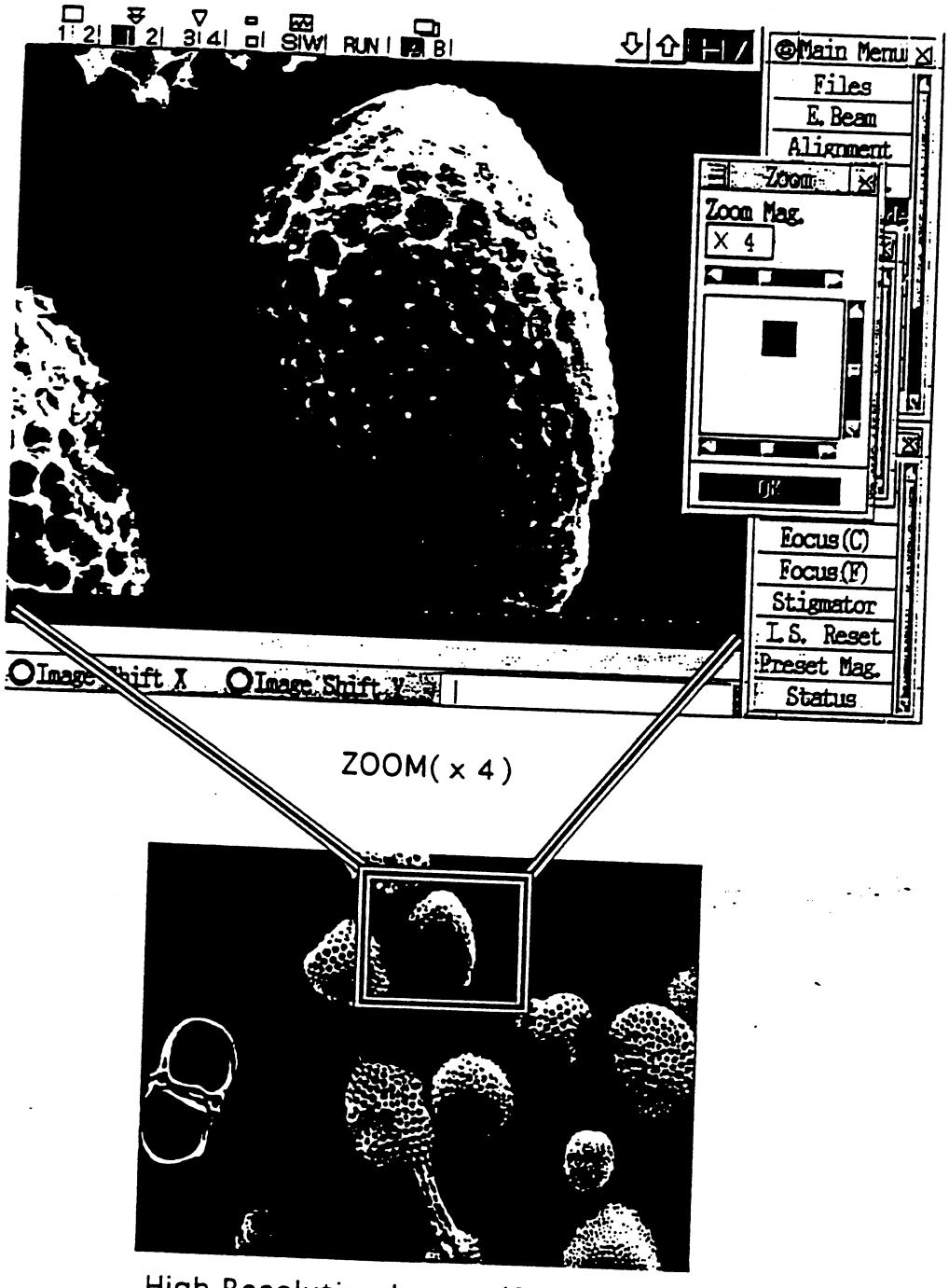

Digital ZOOM (2)

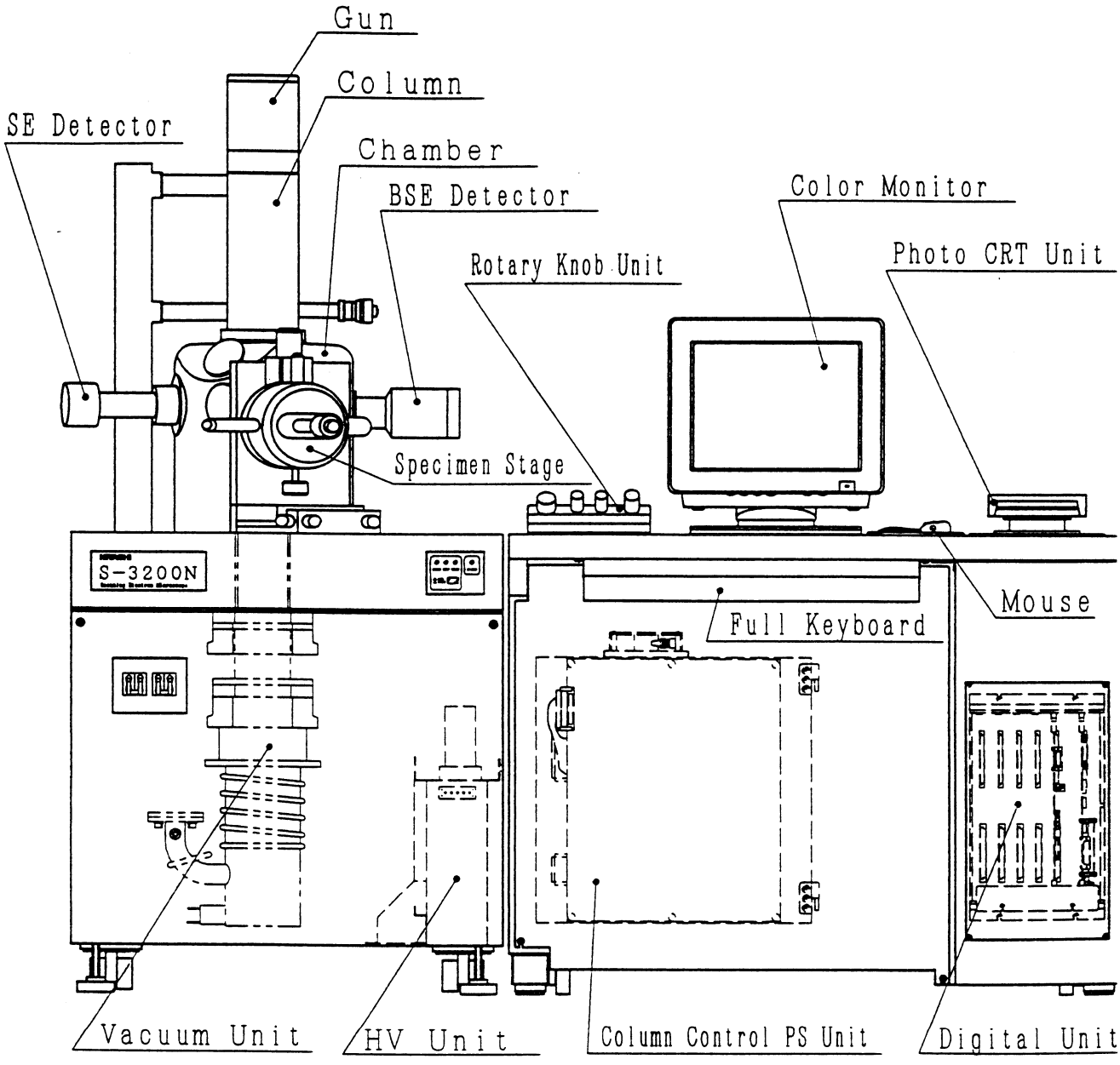

Main Unit

Display Unit

HITACHI

S-3200N

HS　ヤブキ ヨシアキ　95-06-21 08:53:59 川俣茂　SEM　S3200図面庫

IC E7
E8
E9

SG MODE Section

Mode 0 = Slow X
" 1 = Split X
" 2 = Line Analysis Slow (LA Slow)
" 3 = X ADD −10V (Summing)
" 4 = Slow Y
5 = Y ADD −10V
6 = SCAN TO PCRT.
TX = Selected Area Analysis (Triangle
MSAA = Mode Selected Area Analysis.
T-Y Triangle Selected Analysis.
C-X = Auto focus Circle Scan

(1) Functional block diagram

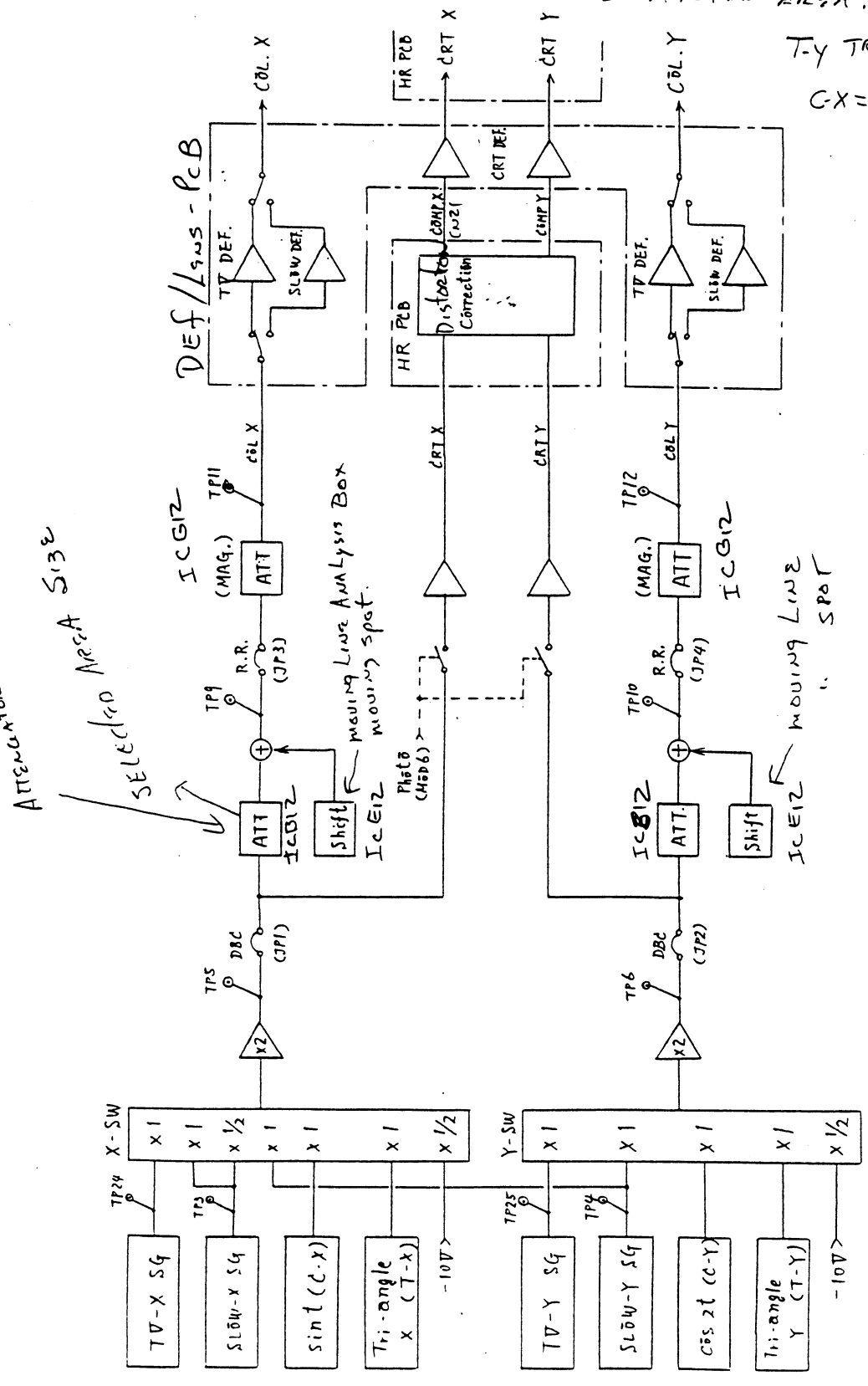

Analog PCB

(2) SG section

① SLOW-X

a) Scan speed

- The power synchronization speed (20 to 200ms) is controlled by cont-rolling the integrator input current via 8 bit DAC. For 0.72 and 4ms, apply a current by a separate circuit.
- For the reduce area scan, limit the amplitude to 1/2.

X interval (50/60Hz)	Running time	Duell time Dwell	AC Synchronization
0.72ms	0.62ms	0.1ms	×
4ms	3.9ms	0.1ms	×
20/16.7ms	16/12.7ms	4ms	○
40/50.1ms	36/46.1ms	4ms	○
100ms	96ms	4ms	○
200ms	196ms	4ms	○
Reduce	0.35ms	0.1ms	×

b) Control function

- X RESET : Return to start point and stop
- X FREE : Free run
- ESYNC X : AC sync ON/OFF

} IC H3 Analog (1/4)

c) Output voltage (TP3)

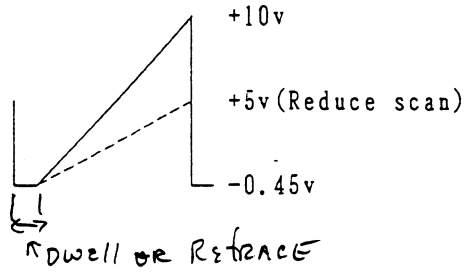

② SLOW-Y

a) Raster line quantity control system

- Control the number of lines by counting X-BLK signal and resetting when a set number of lines is reached. 480L Y Line Counter M5, M6, K5 Analog (2/4)

X-BLK ⟩—[12 bit Counter]—[Compare set number]→ Y RESET

Number of raster lines is: N = DATA × 16

(DATA : Y line data, DY7～0)

b) Amplitude control

- The integrating circuit integrates X-BLK pulses at a constant gain. It is followed by an amplifier and its gain is changed according to the number of lines. Therfore, the output amplitude obtained is the ~~same at~~ any number of lines.

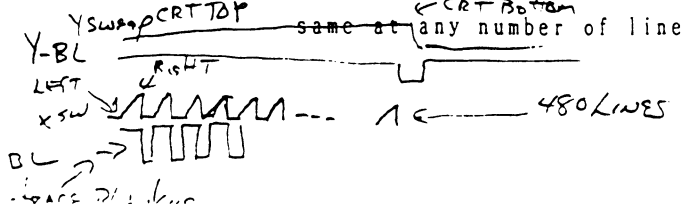

YLO = Photo 1,2,3, HR Memory = 19 Gain
YLINE1 = (NOT USED) – 1000 LINE SCAN
YLINE2 = 480 LINES Slow Scan 1,2,3,4
YLINE3 = ABC Gain 64 32 LINES

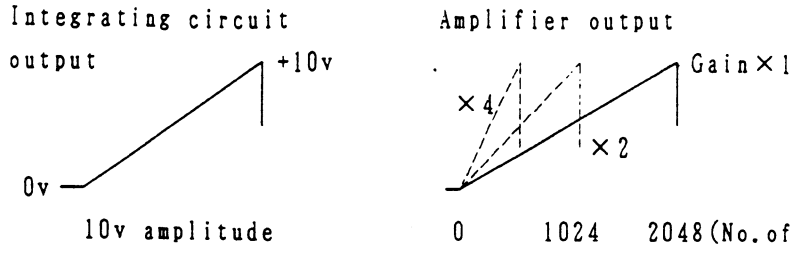

Binary Hex
2 16
D470
D46 1 7
5 1
4 1
1 3 - 1
2 - 0
1 - 0
0 - 0 8

IcN6

No.of ~~X~~ lines	Y LINE data	Amplifier gain	Use	Output swing
1920 ~~2048~~	78 [80]h	×1	Direct photo	~~10v~~ 9V
960 ~~1024~~	3C [40]h	×2	Memory photo	~~10v~~ 9V
480 ~~512~~	1E [20]h	×4	Slow	~~10v~~ 9V
256	[10]h	×4	Monitor (WAVEFORM)	5v
128	[08]h	×4	Reduce	2.5v
32	[02]h	×64	ABCC	10v

c) Control function
- Y Reset: Return to start point and stop
- Y FREE : Free run

Time Display — IMAGE only

ANALOG 4/4 ③ TV-X/TV-Y — Column Scan —

a) Miller integrating type. Synchronized with TDISP(X),VD signal genera-ted by the image memory (IMEM1).

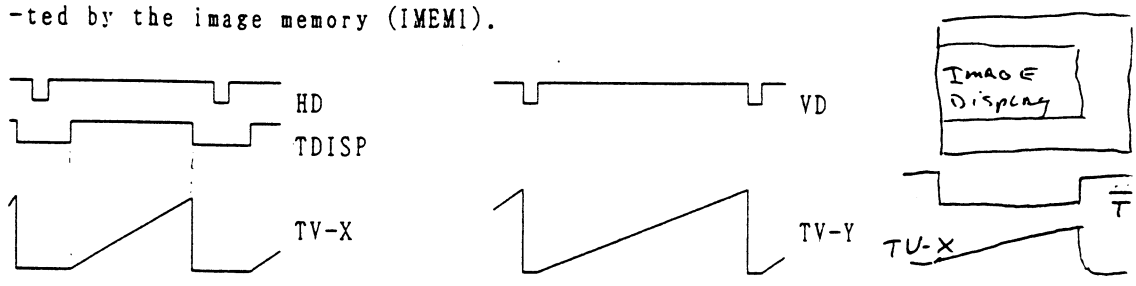

b) Control function
Set to ON/OFF by softwer program.

c) Amplitude
Same as SLOW except that X over-scans beyond the range of 0 to 10v. (Adjust to match the SLOW image.)

④ C-X/C-Y
By sin/cos oscillator and integrator,outputs sin t and sin 2t.

10 millisec/1 TRACE  ← figure

CIRCLE SCAN TIME

At every interval,delivers a trigger output(CST). Used for starting AFC cycle.

ANALOG 4/4 ⑤ T-X/T-Y
Generates a triangle wave of interval 4.8ms(X)/0.2s(Y)(for SAA).

VIDEO AMP Section

(1) Functional block diagram

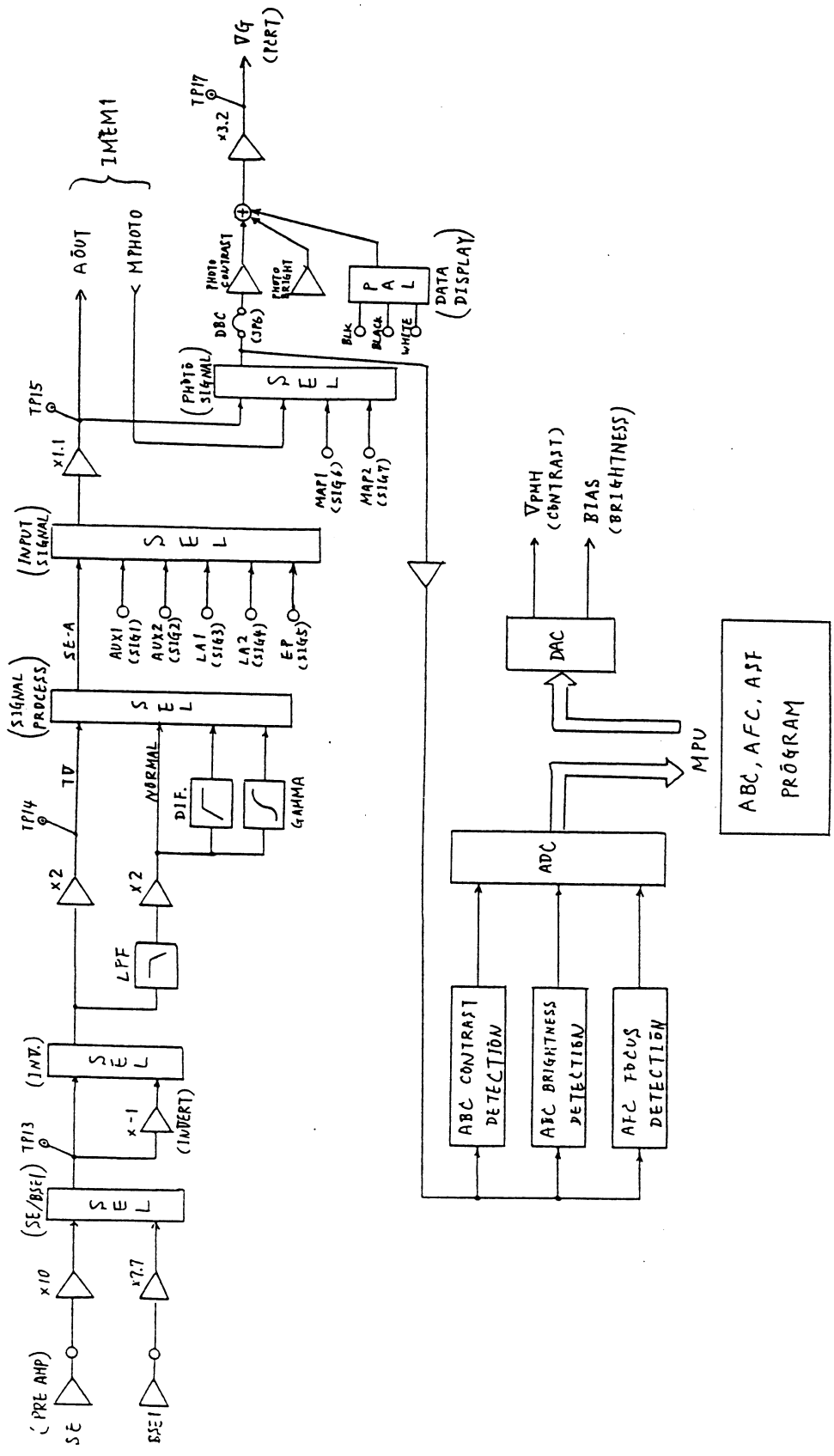

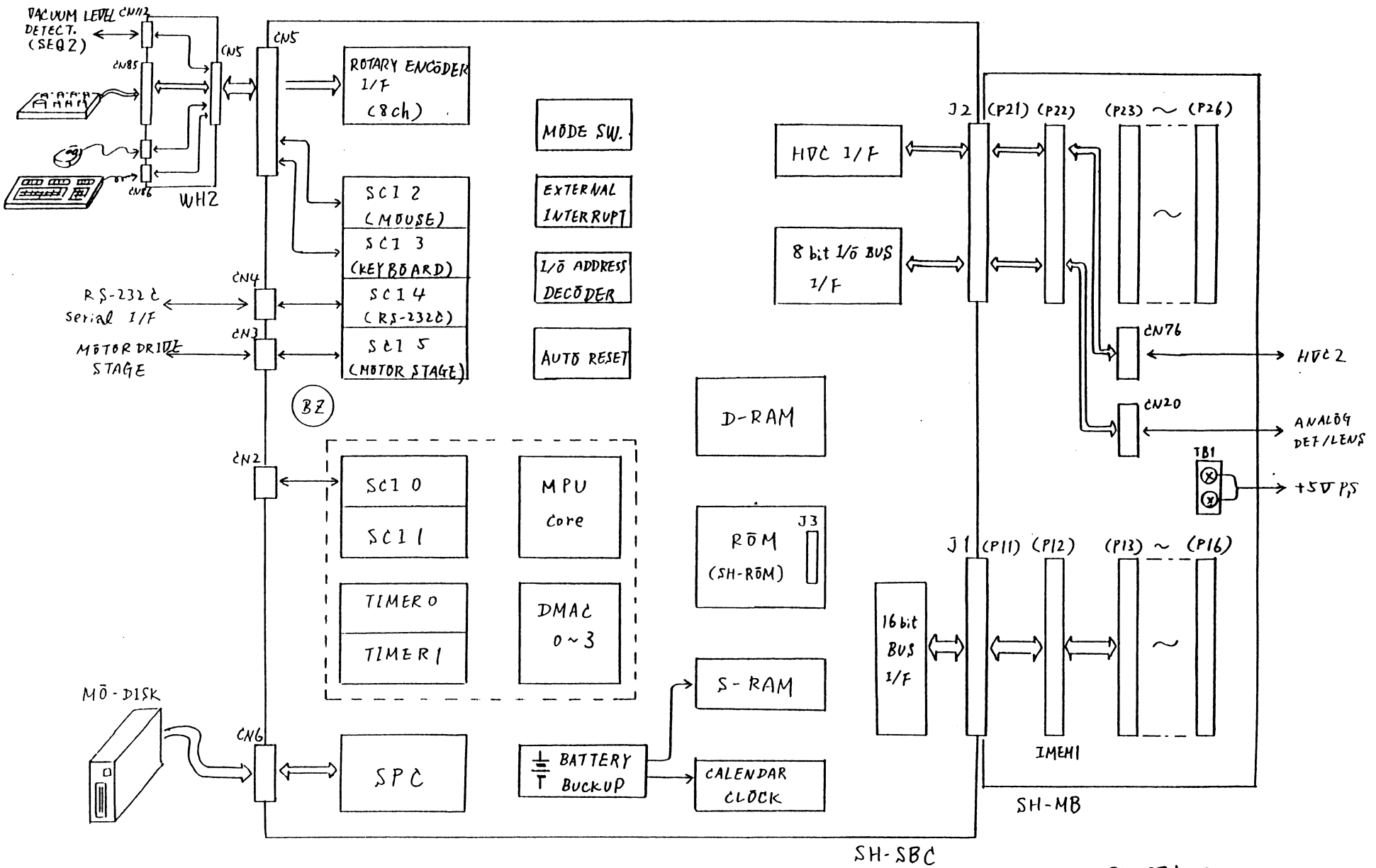

SH-SBC BLOCK DIAGRAM

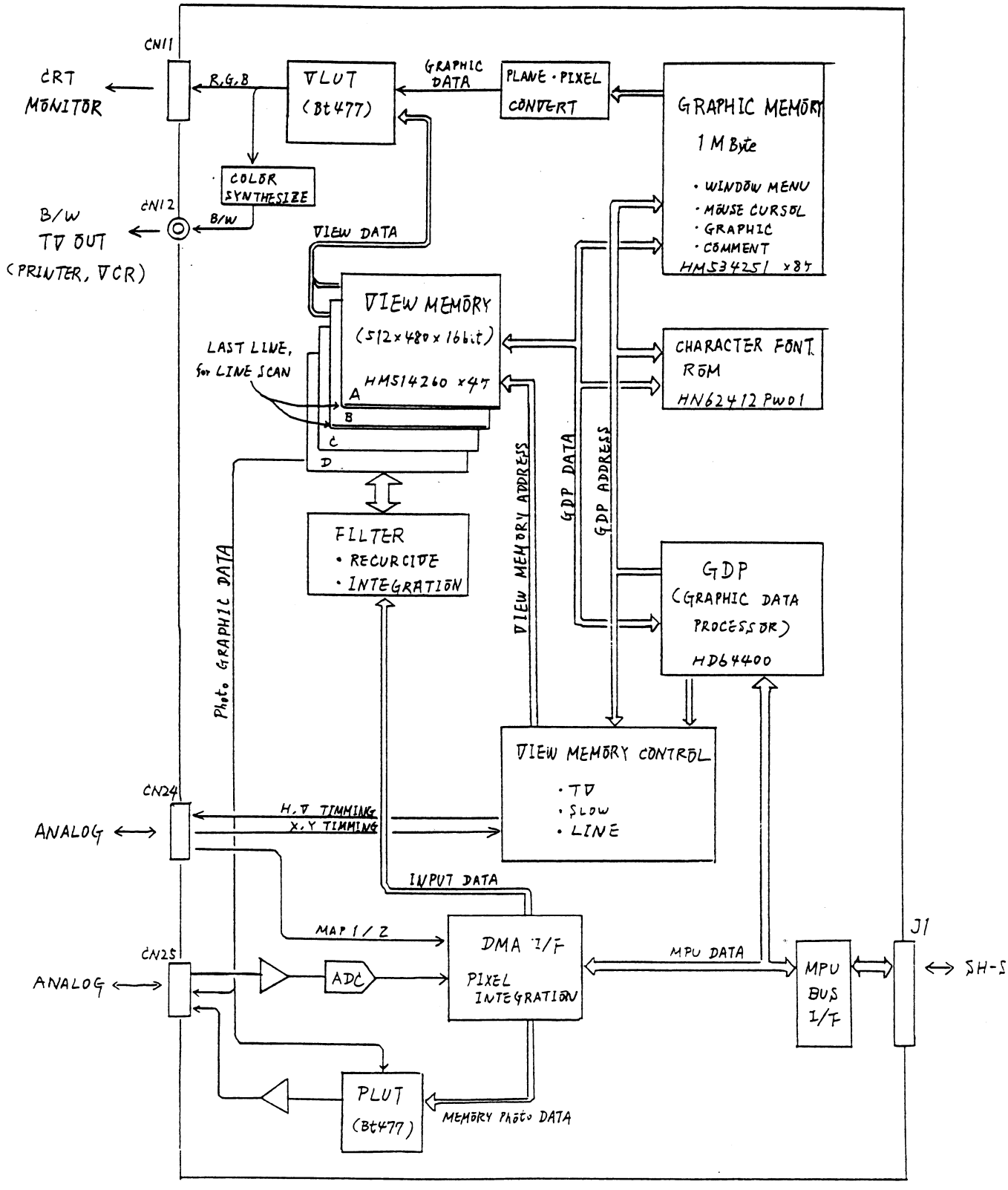

IMEM1 BLOCK DIAGRAM

PHOTO SIZE

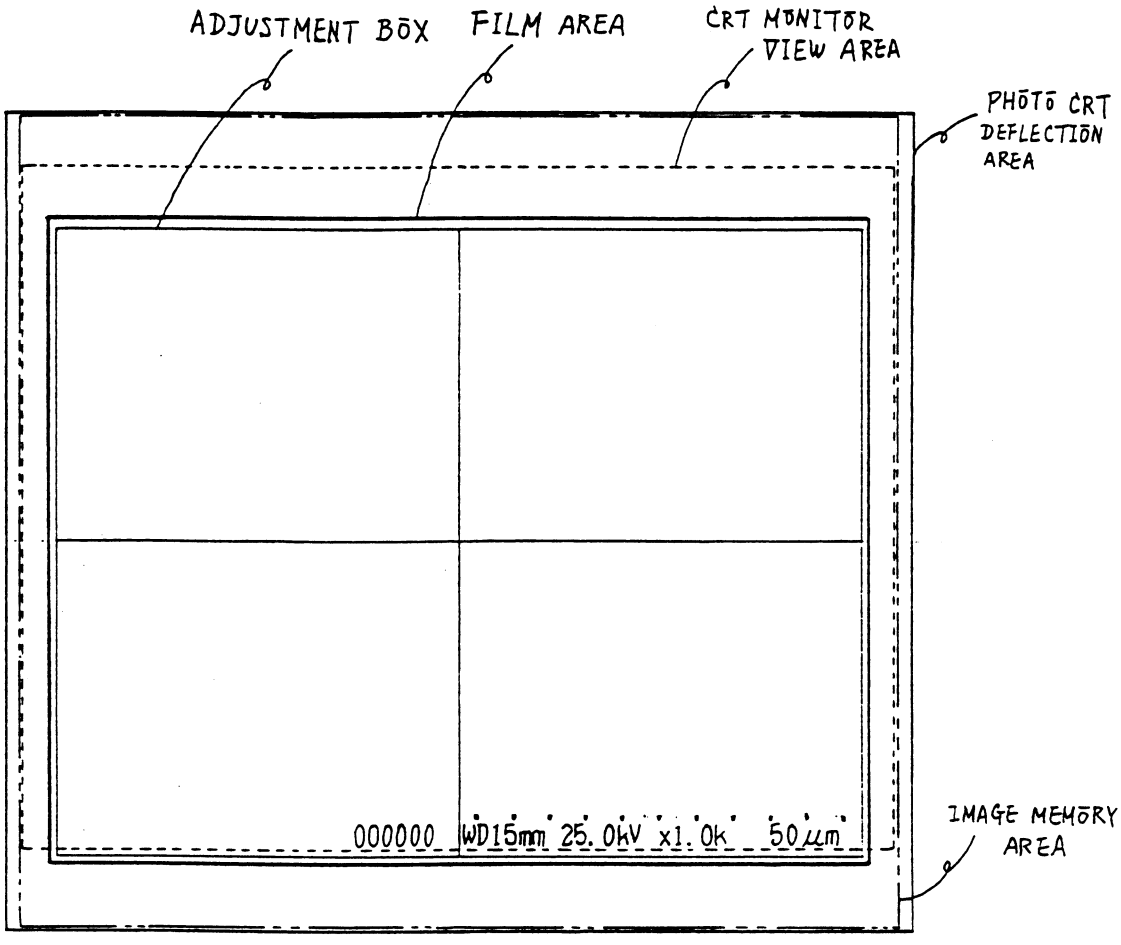

PHOTO

- PHOTO CRT DEF.AREA : 126×114mm (528×480pixel)
- IMAGE MEMORY AREA : 122×114mm (512×480pixel)
- CRT MONITOR VIEW AREA : 122× 95mm (512×400pixel)
- PHOTO FILM AREA : 114× 89mm (479×374pixel)
- ADJUSTMENT BOX : 112× 87mm (470×365pixel)

VIEW MONITOR

- CRT MONITOR VIEW AREA : 195×152mm (512×400pixel)
- CRT MONITOR MENU SIZE : 244×186mm (640×480pixel)

VIEW RATIO of MONITOR : ×1.6
PIXEL ASPECT : 1 : 1
PHOTO PIXEL RESOLUTION : 4.2dot/mm(107DPI)

Maintenance Menu 1

The MOUSE CURSOL move to left bottom edge on monitor, and push left button.

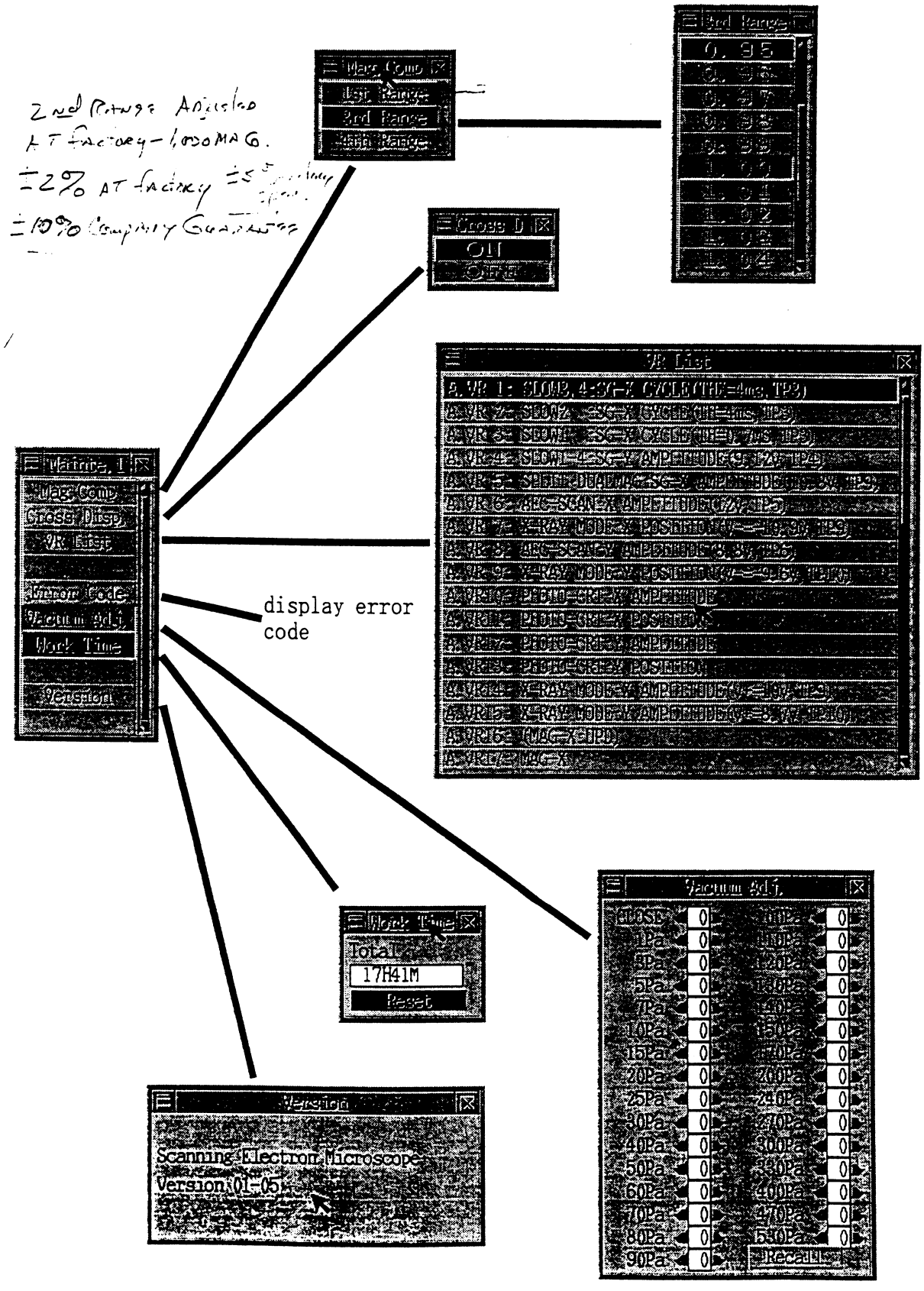

Maintenance Menu 2

The menu display condition of mode switch on the SH-SBC.

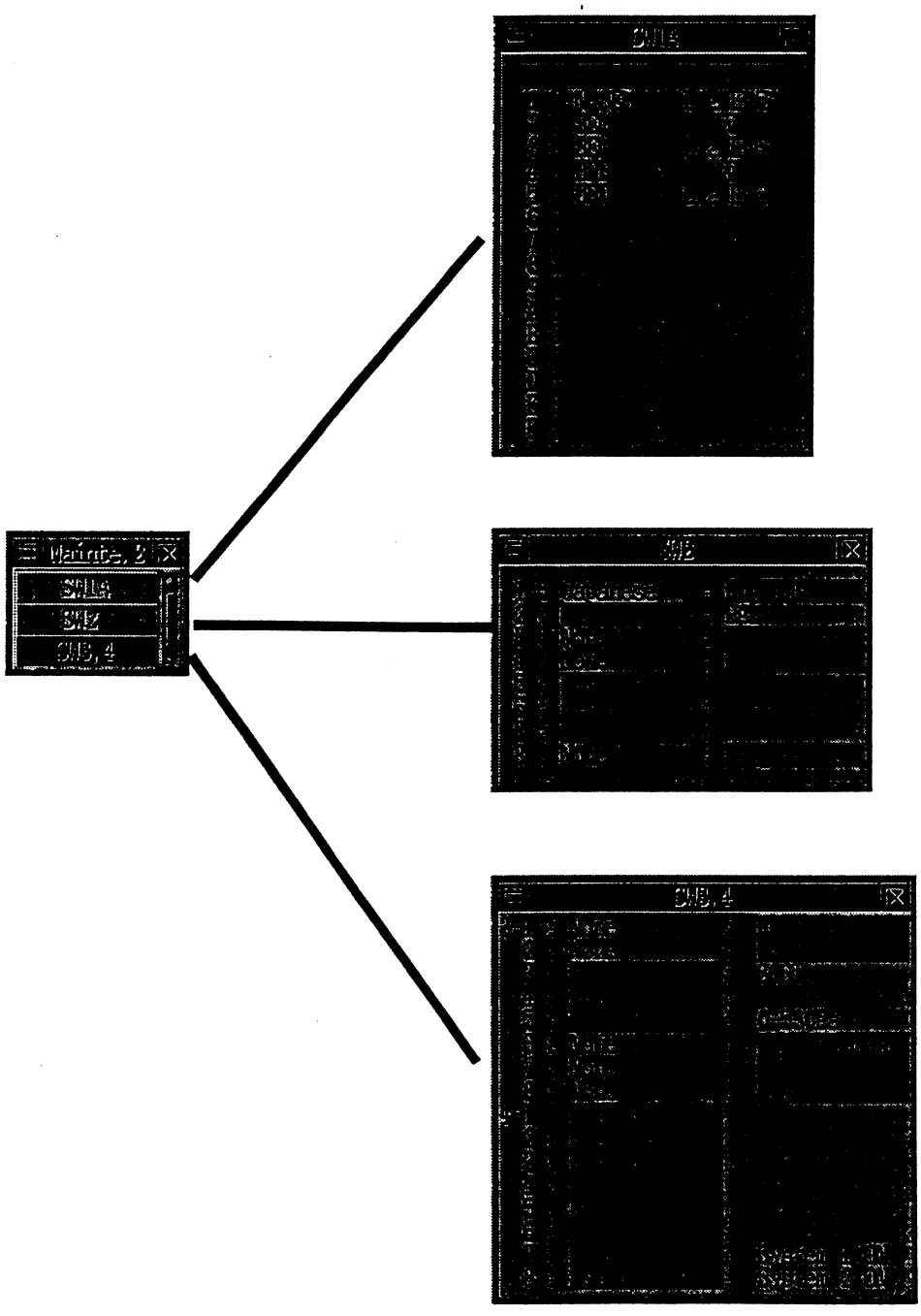

( ) — NOT USED

PCB NAME	SW,VR NAME	FUNCTION
ANALOG	VR1	SLOW3,4:SG-X CYCLE(Thx=4ms,TP3)
	VR2	SLOW2 :SG-X CYCLE(Tx=4ms,TP3)
	VR3	SLOW1 :SG-X CYCLE(Tx=0.7ms,TP3)
	VR4	SLOW1-4:SG-Y AMPLITUDE(9.1V,TP4)
	VR5	SPLIT·DUALMAG:SG-X AMPLITUDE
	VR6	∞ -SCAN:X AMPLITUDE(12V,TP5)
	VR7	X-RAY MODE:X POSITION
	VR8	∞ -SCAN:Y AMPLITUDE(8.8V,TP6)
	VR9	X-RAY MODE:Y POSITION
	VR10	PHOTO-CRT:X WIDTH
	VR11	PHOTO-CRT:X POSITION
	VR12	PHOTO-CRT:Y WIDTH
	VR13	PHOTO-CRT:Y POSITION
	VR14	X-RAY MODE:X AMPLITUDE
	VR15	X-RAY MODE:Y AMPLITUDE
	VR16	(MAG-Y:UPD) — upper detector ← NOT USED
	VR17	MAG-X(COLUMN SCAN X WIDTH) CW SMALLER
	VR18	COLUMN SCAN RIGHT ANGLE
	VR19	(COLUMN SCAN RIGHT ANGLE:UPD) —
	VR20	(MAG-X:UPD)
	VR21	MAG-Y(COLUMN SCAN Y WIDTH) CW SMALLER
	VR22	TV-SCAN:X AMPLITUDE
	VR23	TV-SCAN:X POSITION
	VR24	TV-SCAN:Y AMPLITUDE
	VR25	TV-SCAN:Y POSITION
	VR26	ABC-CONTRAST:ADC LEVEL
	VR27	ABC-BRIGHTNESS:ADC LEVEL
	VR28	LINE-ANALYSIS1 AMPLITUDE
	VR29	LINE-ANALYSIS1 POSITION
	VR30	LINE-ANALYSIS2 AMPLITUDE
	VR31	LINE-ANALYSIS2 POSITION
	VR32	TV-SCAN:MEMORY AREA(Thx=10μS,TP24)
	VR33	PHOTO-CRT BRIGHTNESS(COURSE)
	VR34	PHOTO-CRT BRIGHTNESS(FINE)
	VR40	BSE1 SIGNAL:GAIN
	JP1	SHORT: NONE OPEN : DBC (X-SCAN)
	JP2	SHORT: NONE OPEN : DBC (Y-SCAN)
	JP3	SHORT: NONE OPEN : RASTER ROTATION (X-SCAN)
	JP4	SHORT: NONE OPEN : RASTER ROTATION (Y-SCAN)
	JP5	SHORT: NONE OPEN : DBC (BLK) composite
	JP6	SHORT: NONE OPEN : DBC (VIDEO)
	JP7	ALWAYS SHORT

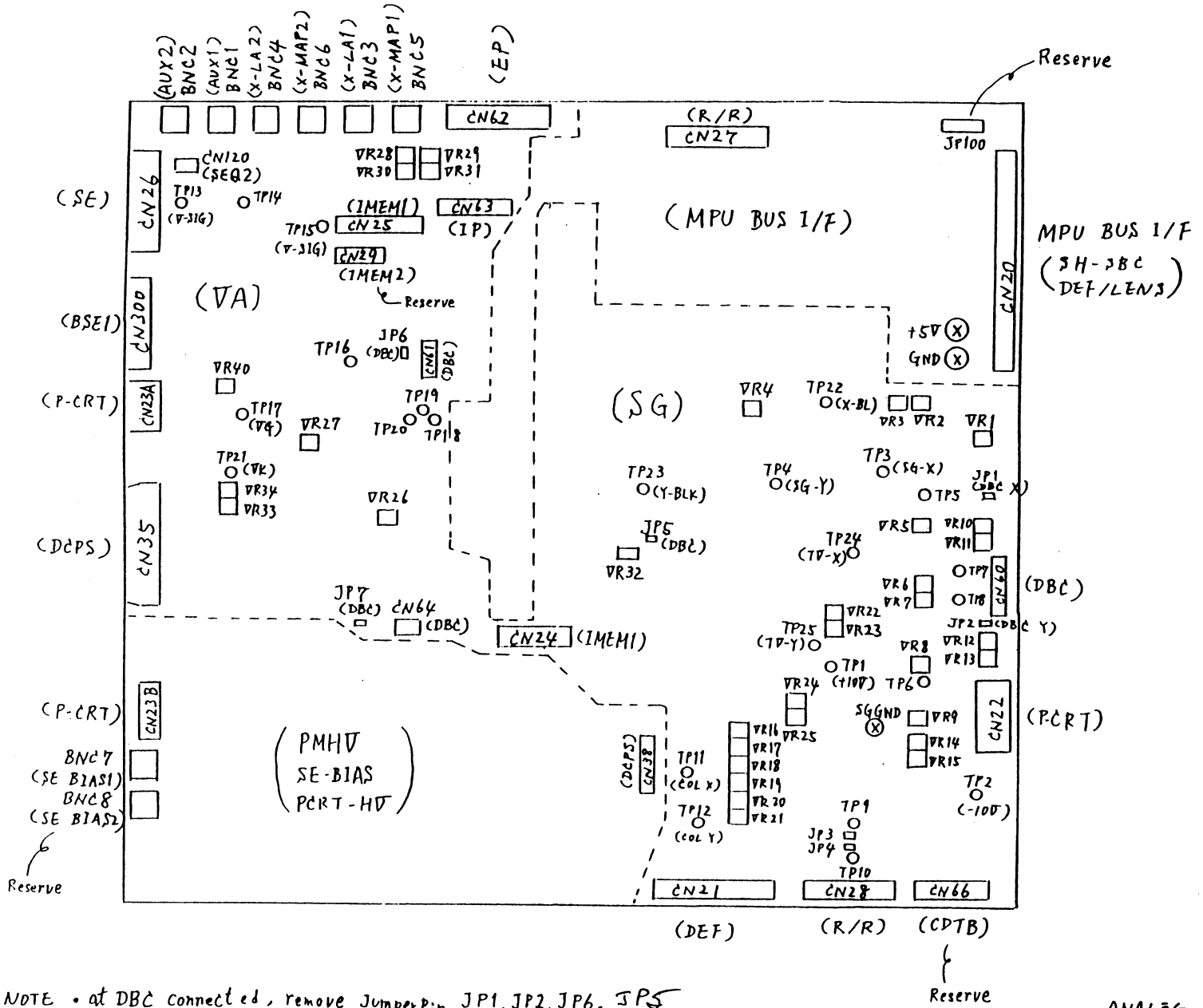

NOTE • at DBC connected, remove JumperPin JP1, JP2, JP6, JP5
• at Raster Rotation PCB fixed, remove JumperPin JP3, JP4.

ANALOG PCB

PCB NAME	SW, VR NAME	FUNCTION
DEF/LENS	VR1	OBJ-SPAN
	VR3	COND1-SPAN
	VR4	COND2-SPAN
	VR5	TV-X : MAG CENTER — 300MAG to 350MAG Adjust
	VR6	SLOW-X : MAG CENTER
	VR7	TV-Y : MAG CENTER — 300 to 350 MAG Adjust.
	VR8	SLOW-Y : MAG CENTER
	VR9	DINAMIC FOCUS CENTER
	VR10	REFERENCE : +10V(TP1)

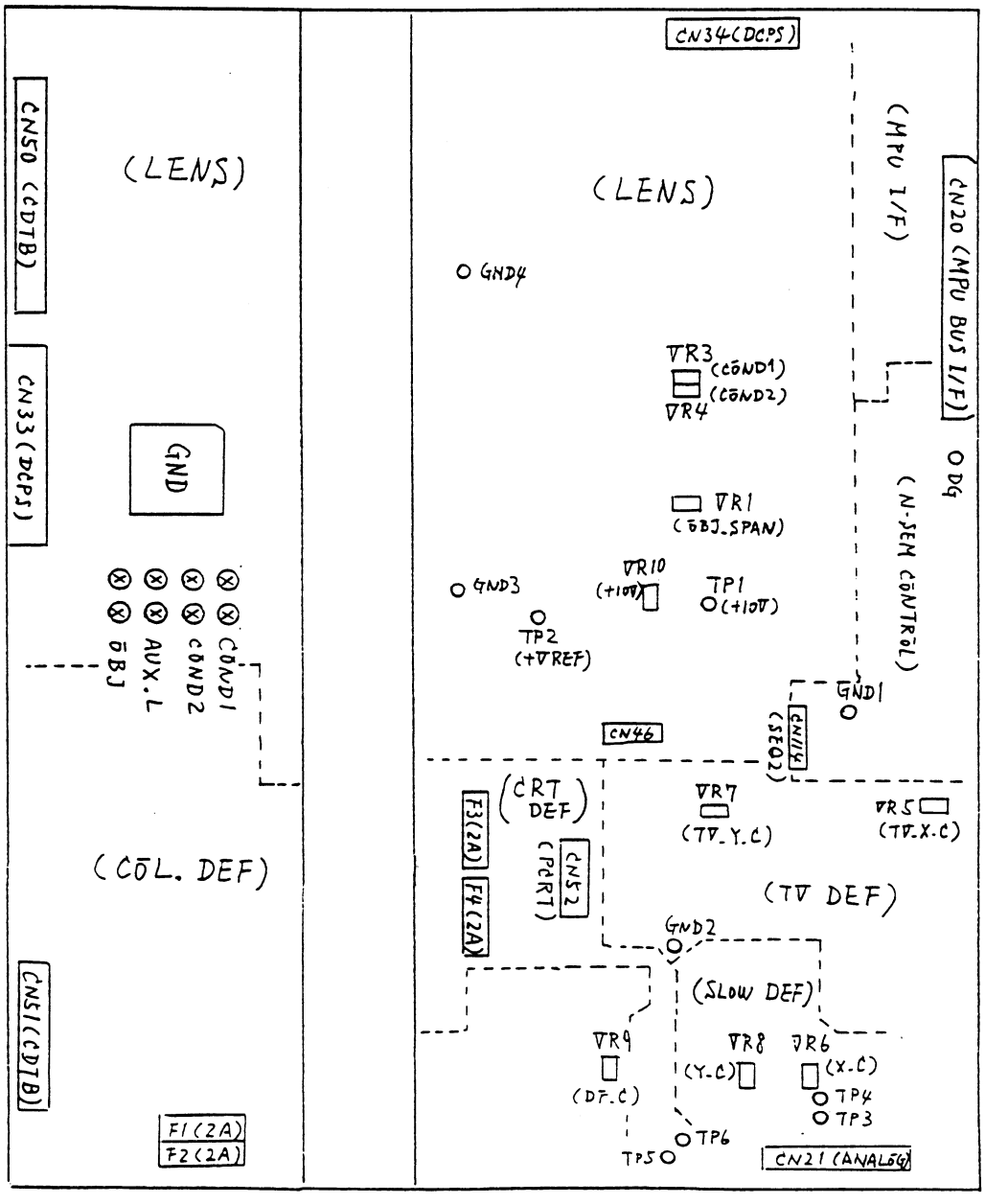

DEF/LENS PCB

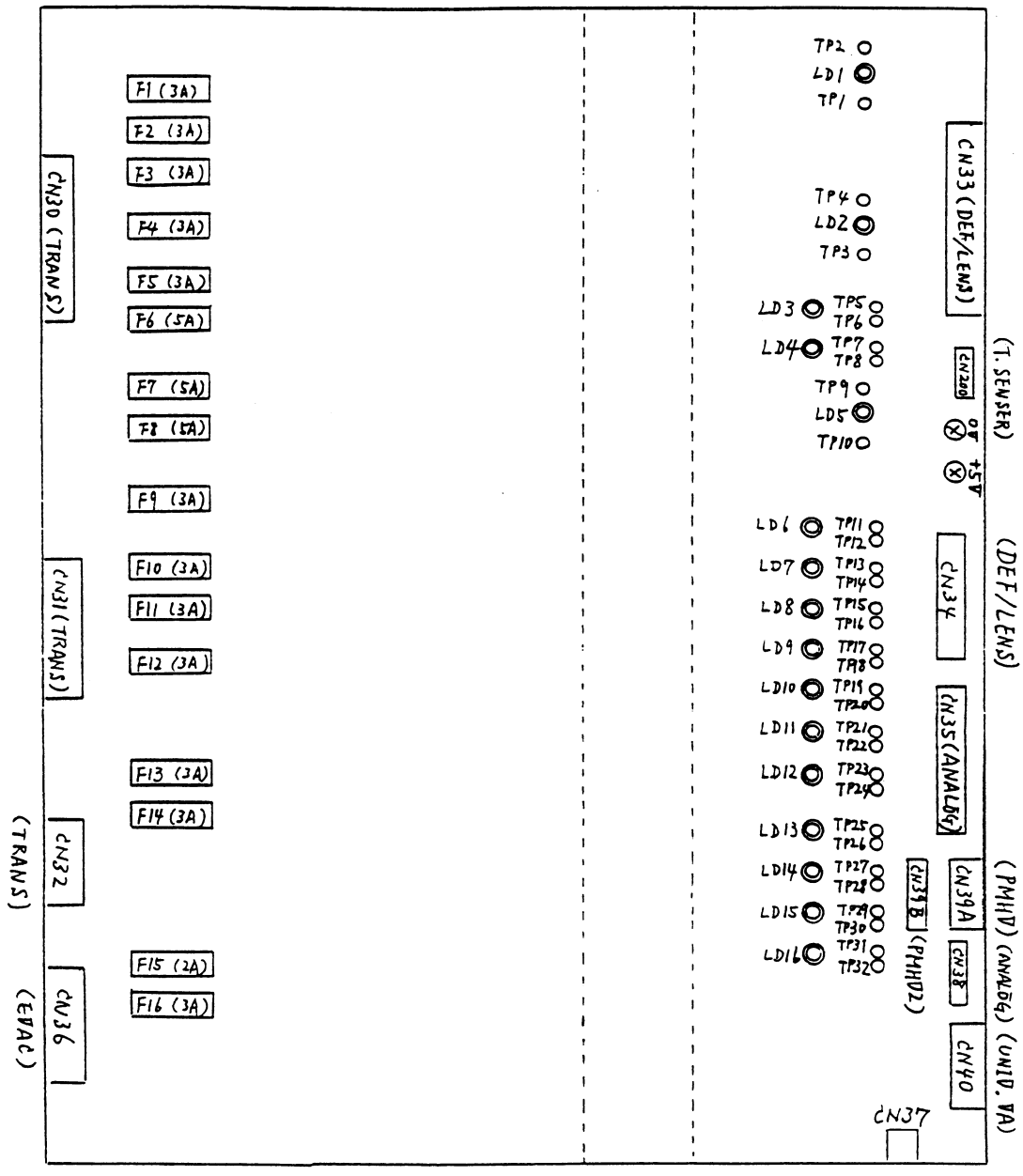
CN33 (DEF/LENS)
CN30 (TRANS)
CN31 (TRANS)
CN32 (TRANS)
CN36 (EVAC)
CN34 (DEF/LENS)
CN35 (ANALOG)
CN39A (PMHD) (ANALOG)
CN39B (PMHD2)
CN38
CN40 (UNID. VA)
CN37
CN20B (T. SENSER)
OT
+5V
F1 (3A)
F2 (3A)
F3 (3A)
F4 (3A)
F5 (3A)
F6 (5A)
F7 (5A)
F8 (5A)
F9 (3A)
F10 (3A)
F11 (3A)
F12 (3A)
F13 (3A)
F14 (3A)
F15 (2A)
F16 (3A)
TP1
LD1
TP2
TP3
LD2
TP4
TP5
TP6
LD3
TP7
TP8
LD4
TP9
LD5
TP10
TP11
TP12
LD6
TP13
TP14
LD7
TP15
TP16
LD8
TP17
TP18
LD9
TP19
TP20
LD10
TP21
TP22
LD11
TP23
TP24
LD12
TP25
TP26
LD13
TP27
TP28
LD14
TP29
TP30
LD15
TP31
TP32
LD16

DCPS PCB

PCB NAME	SW, VR NAME	FUNCTION	
S H − S B C	S W 1 A NORMAL Position = 0	0 : N-SEM & W Tungston 1 : N-SEM & LaB6 2 : H-SEM & W 3 : H-SEM & LaB6 4 : UPD & W 5 : UPD & LaB6 6 : 7 :	8 : 9 : A : B : C : D : E : F :
	S W 1 B NORMAL Position = 0	0 : 1 : 2 : 3 : 4 : 5 : 6 : 7 :	8 : 9 : A : B : C : D : E : F :
	S W 2 USA	OFF	ON
		1 JAPANESE	ENGLISH
		2 NTSC	PAL
		3 NONE	X-RAY MODE
		4 NONE	PSEUDO COLOR
		5 RESERVE	
		6 RESERVE	MENU US .. JA / JAPA OR SA
		7	
		8 NONE	LANGUAGE CHANGE
	S W 3 USA	1 NONE	RR, DF, TC (RR = RASTER Rotat DF = Dynamic foc TC = Tilt Compens.)
		2 NONE	RS-232C
		3 NONE	SCSI
		4 RESERVE	
		5 0-270Pa	0-530Pa
		6 NONE	BSE2 ELEMENT
		7 NONE	MOD
		8 NONE	GRAPHIC
	S W 4 USA	1 RESERVE	
		2 RESERVE	
		3 RESERVE	
		4	
		5 RESERVE	
		6	
		7 SYSTEM 1 OFF	SYSTEM 1 ON (ONLY for Service Adjust.)
	NORMAL − System #2 off	8 SYSTEM 2 OFF	SYSTEM 2 ON
	J P 1	SHORT: WDT NORMAL(AUTO RESET) OPEN : WDT NONE (for DEBUG)	
	J P 2	SHORT: BUZZER LOUD OPEN : BUZZER LOW	

System #1 = NO MEANING

System #2 ON − only for Service Engineer Adjust.

System #2 = NO MEANING

System #2 = ON MEANS SEBCAS

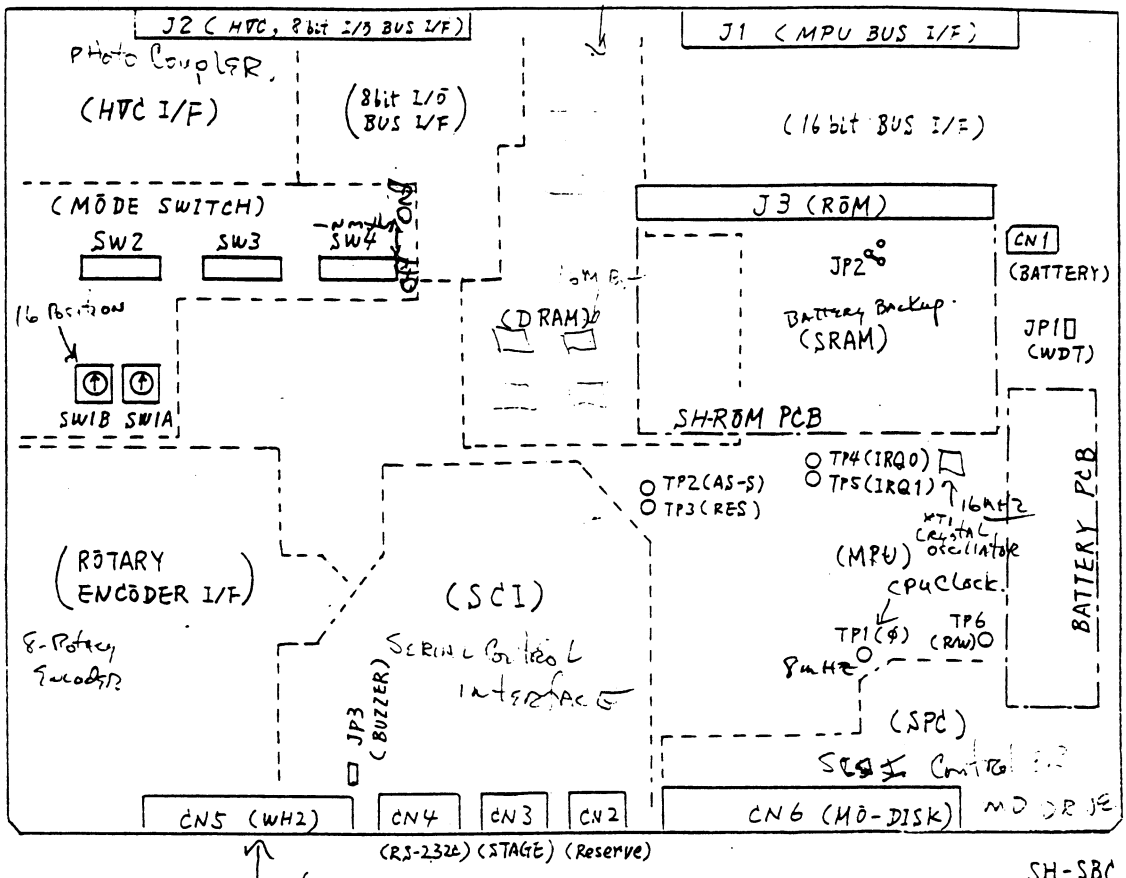

SH-SBC PCB
4 LAYER

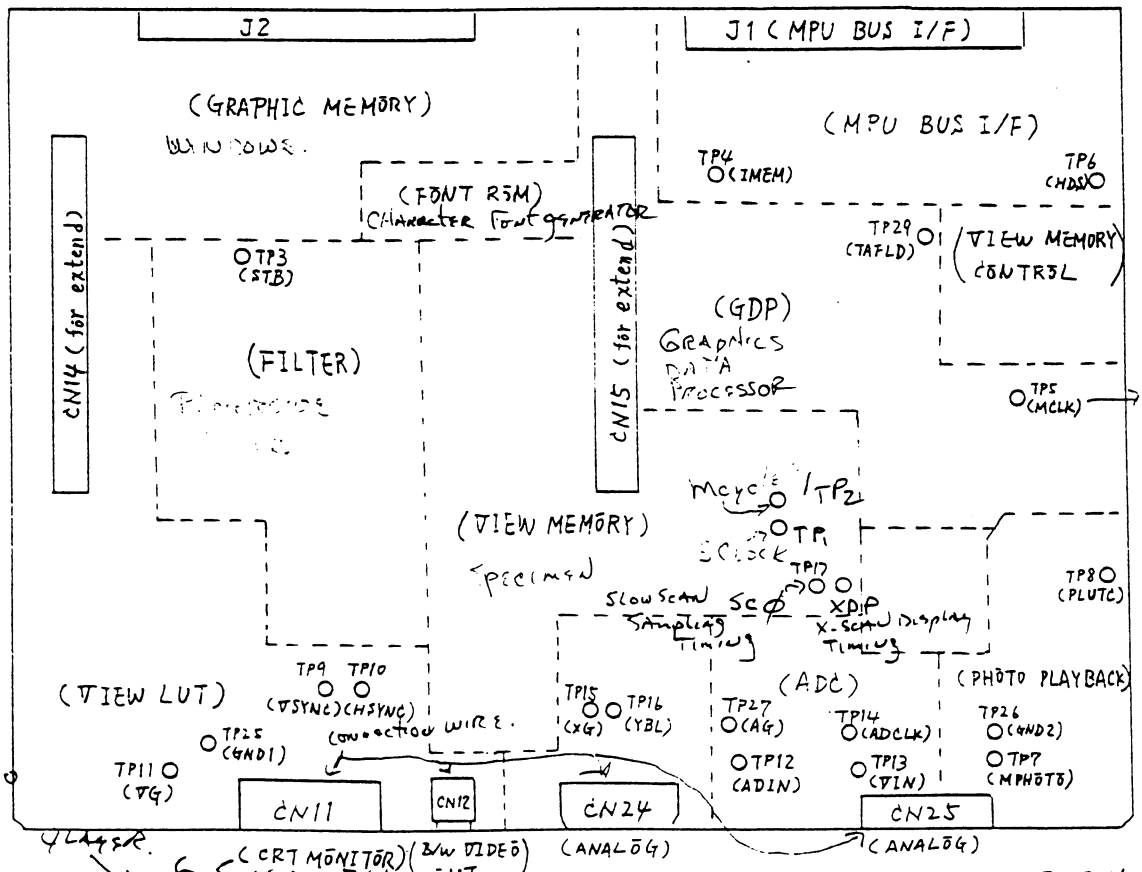

IMEM1 PCB
4 LAYER PCB

PCB NAME	SW,VR NAME	FUNCTION
HVC2	VR1	ACC.VOLTAGE ADJUST
	VR2	FILAMENT CURRENT ADJUST
	VR3	FREQUENCY(32 μS)

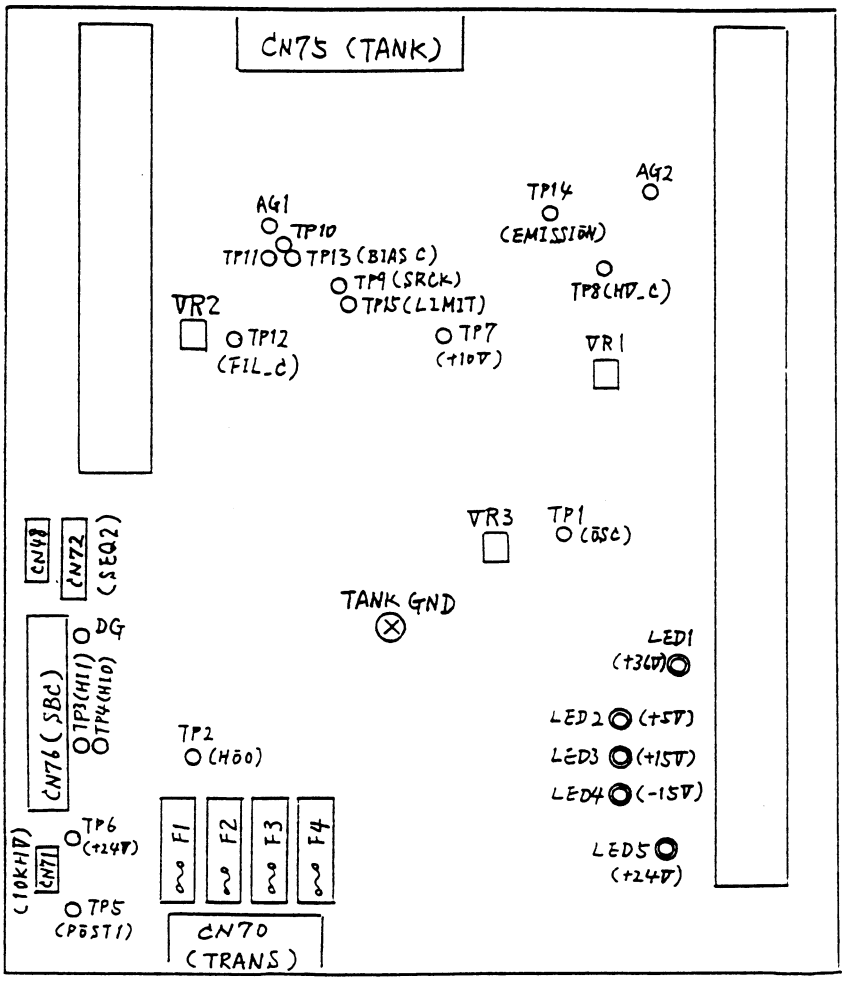

HVC2 PCB

PCB NAME	SW,VR NAME	FUNCTION
SEQ2	VR1 VR2 VR3	GUN-VACUUM LEVEL ADJ. CHAMBER-VACUUM LEVEL ADJ. SPECIMEN-CHANGER VACUUM ADJ.
	JP1	1-2 SHORT : HIGH 2-3 SHORT : NATURAL
	JP2	SHORT: NONE OPEN : UTW
	JP3	1-2 SHORT: W-GUN 2-3 HSORT: LaB6-GUN
	JP4	1-2 SHORT: W-GUN 2-3 SHORT: LaB6-GUN
	JP5	ALWAYS SHORT
	JP6	SHORT: NONE OPEN : BSE2
	JP7	SHORT: NONE OPEN : BSE1
	JP8	SHORT: NONE OPEN : S.CHANGE

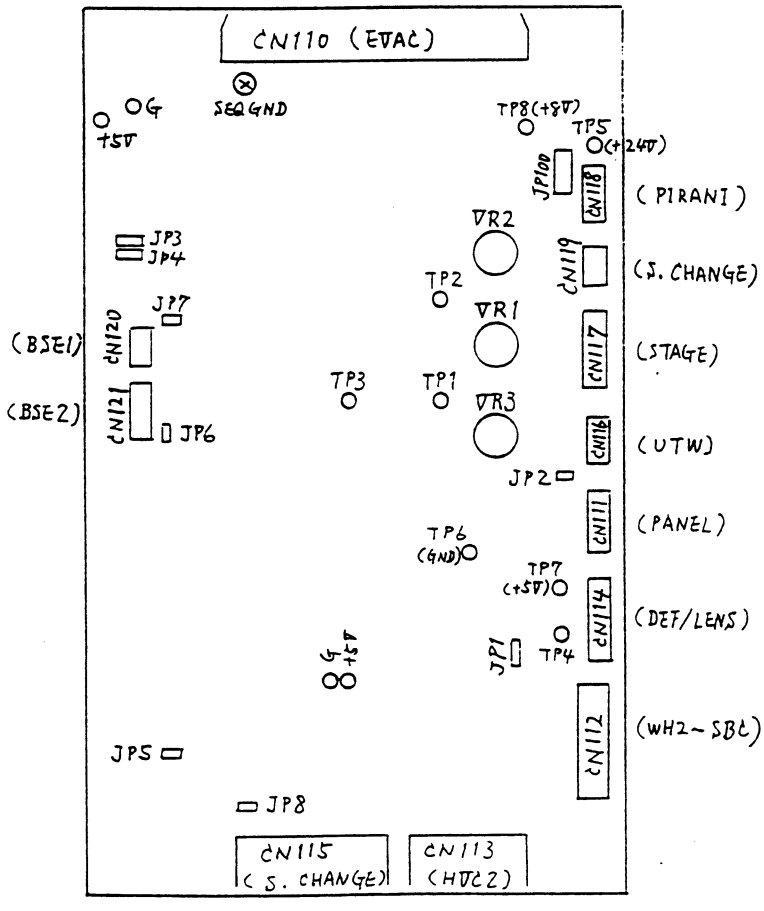

SEQ PCB

PCB NAME	SW,VR NAME	FUNCTION
HR CRT	VR 1	FOCUS
	VR 2	〃
	VR 3	〃
	VR 4	〃
	VR 5	〃
	VR 6	Correction of magnification error on CRT center and edge (X scale)
	VR 7	Correction pincushion distortion (X scale)
	VR 8	Correction of magnification error on CRT center and edge (Y scale)
	VR 9	Correction pincushion distortion (Y scale)
	VR 10	SPOT POSITION(X scale)
	VR 11	SPOT POSITION(Y scale)
	VR 12	SQUARING WAVEFORM GAIN (X)
	VR 13	SQUARING WAVEFORM GAIN (Y)
	SW 1	SINGLE UNIT ADJUSTMENT

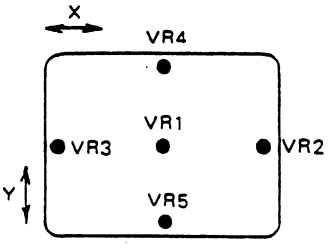

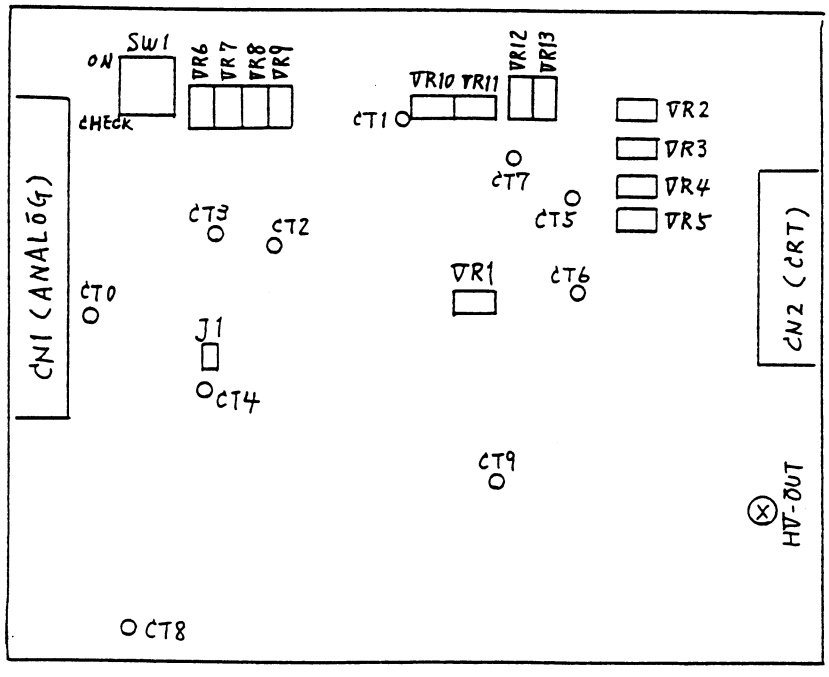

HR PCB

SG MODE

図 4-10-1 ブロック

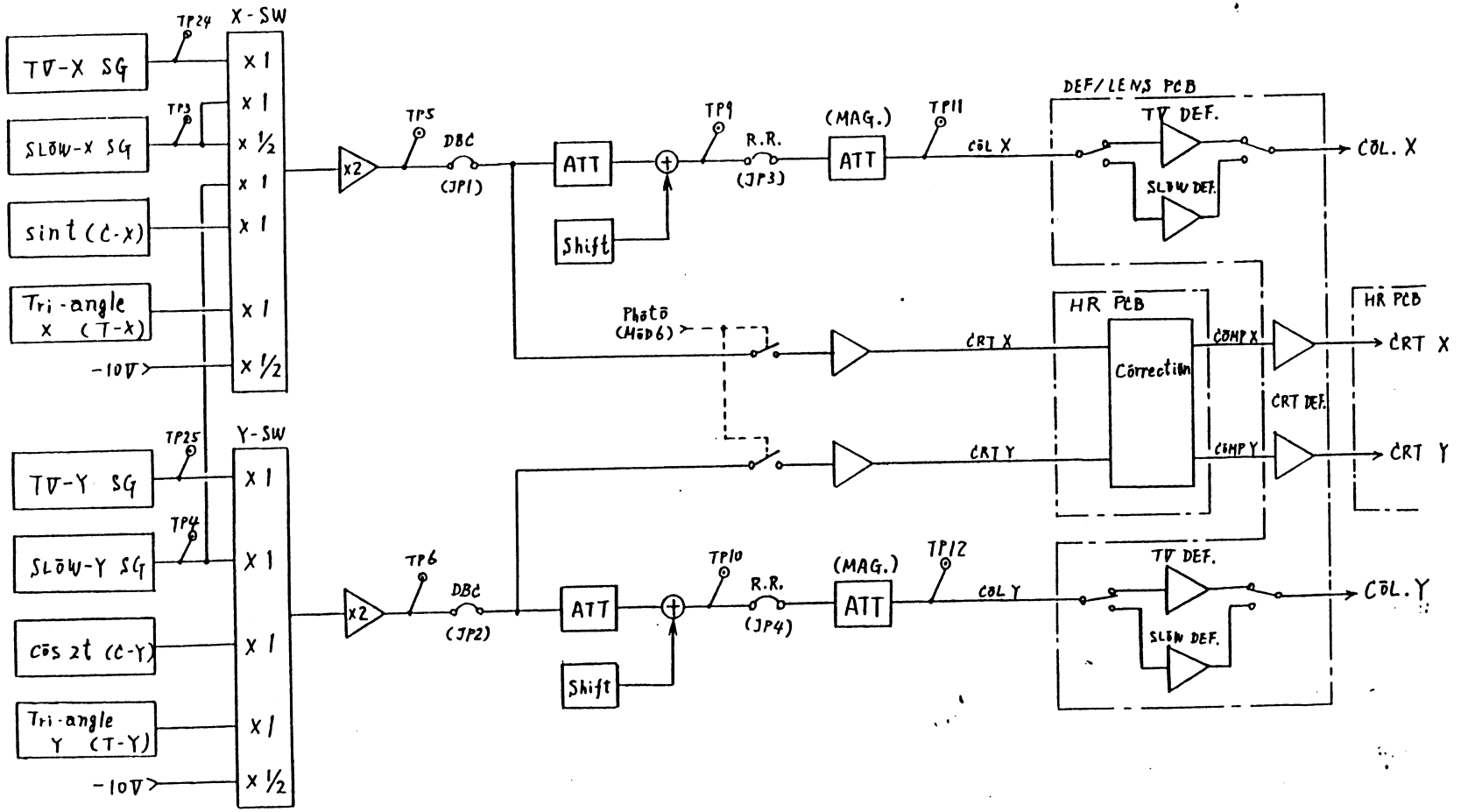

VIDEO AMP 회로

(1) 전체 블록도

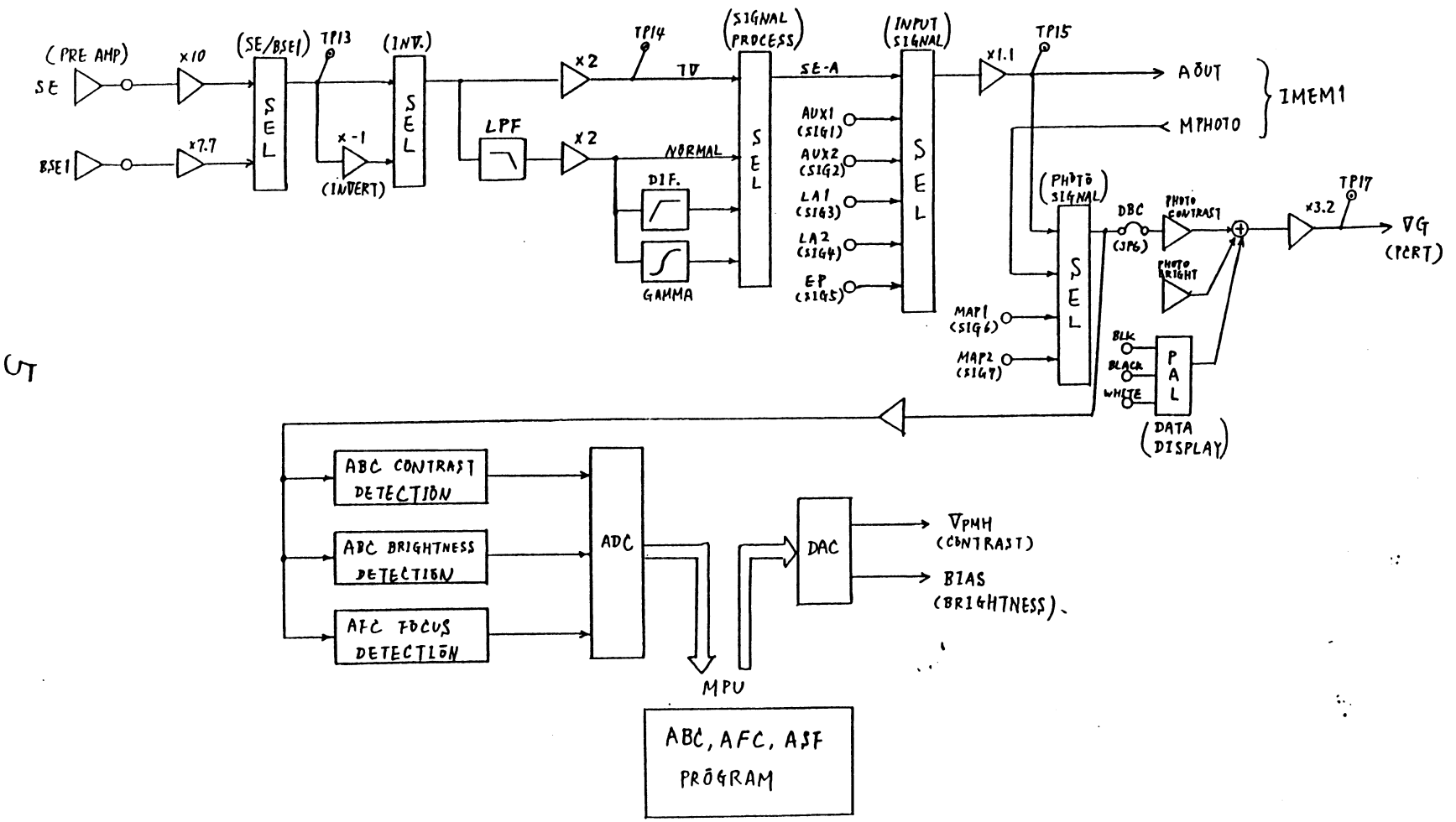

5T

SEQ ブロック

(1) ハードウェア図

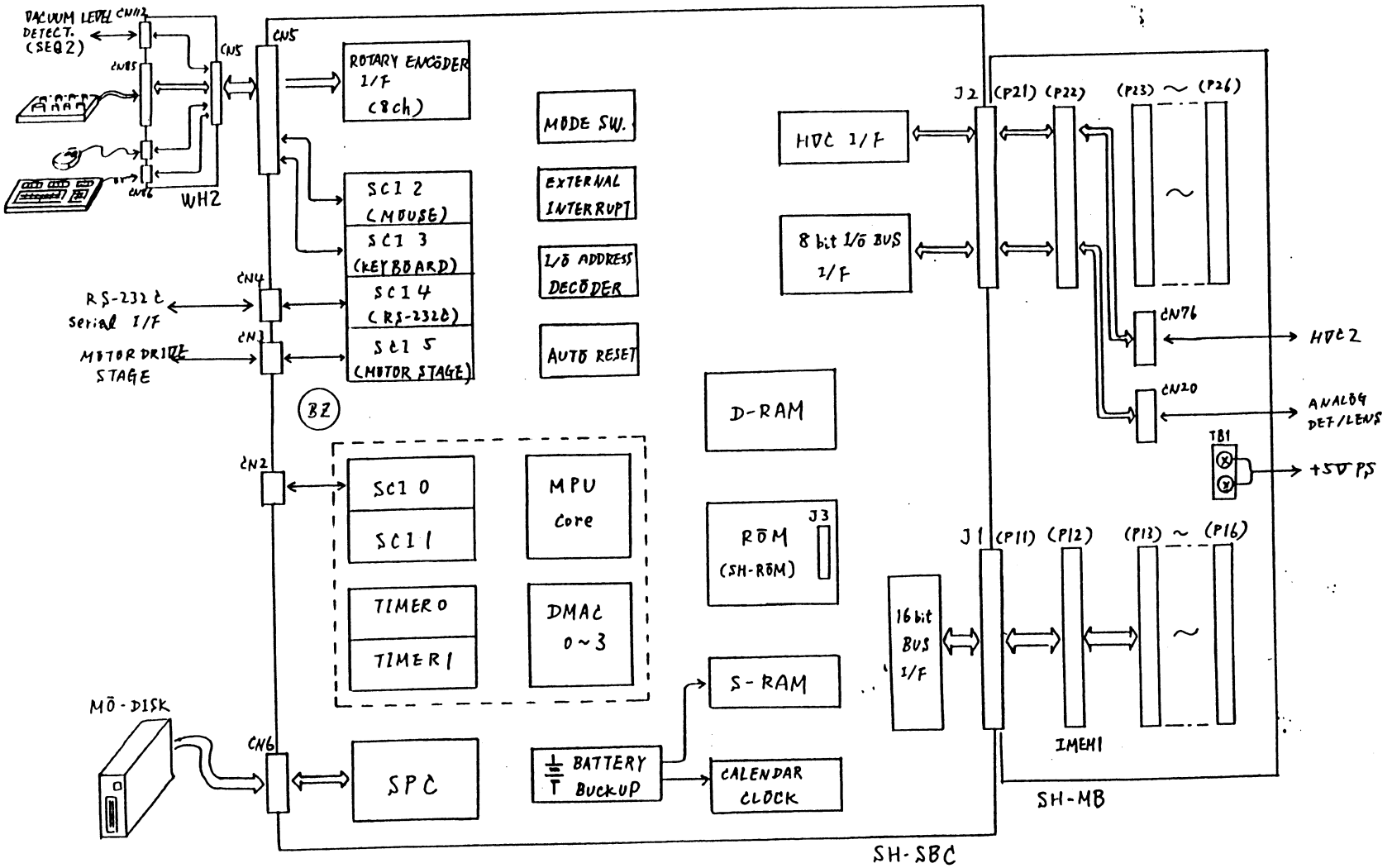

IMEM1 印

(1) 特殊ブロック図

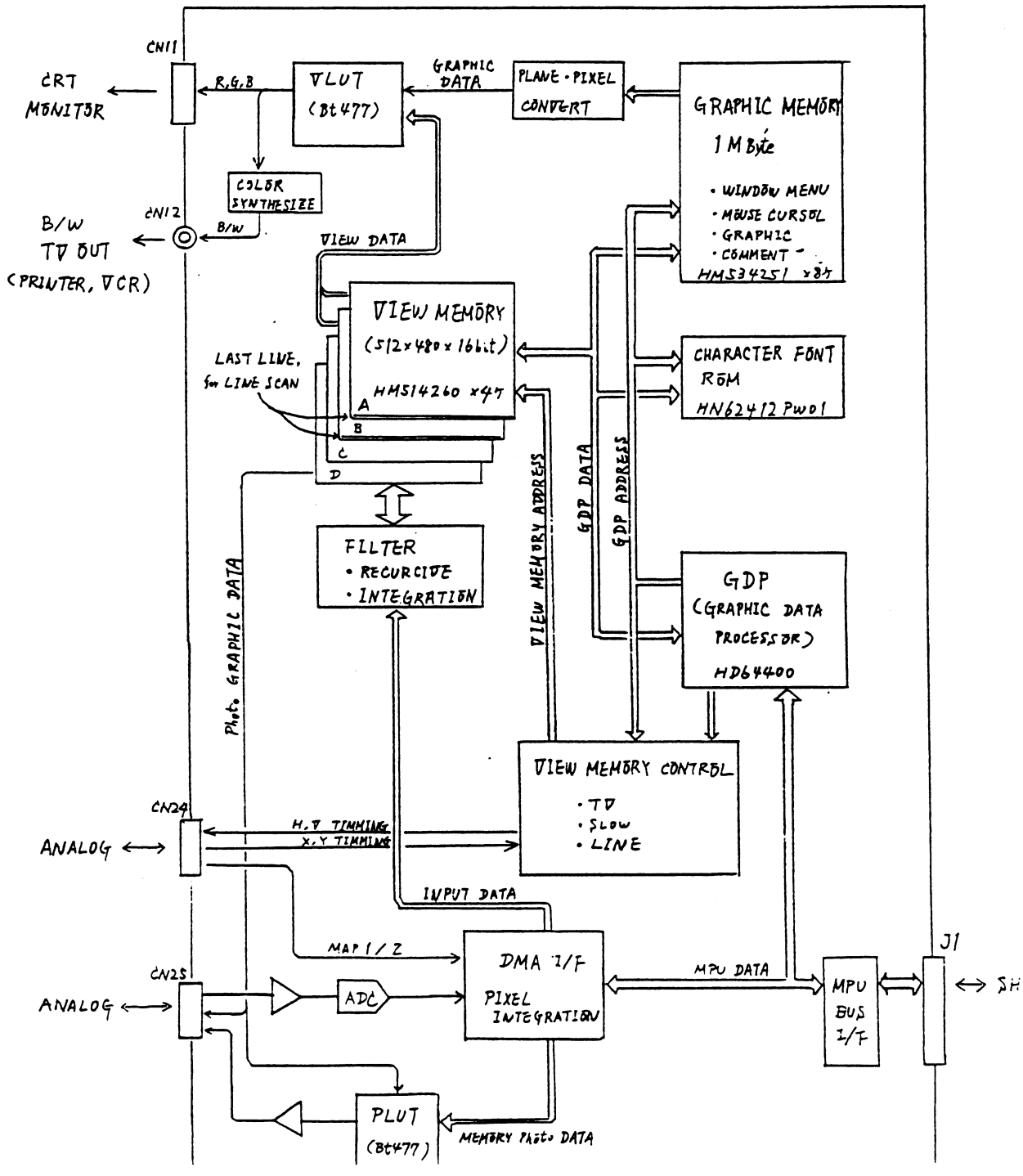

PHOTO SIZE

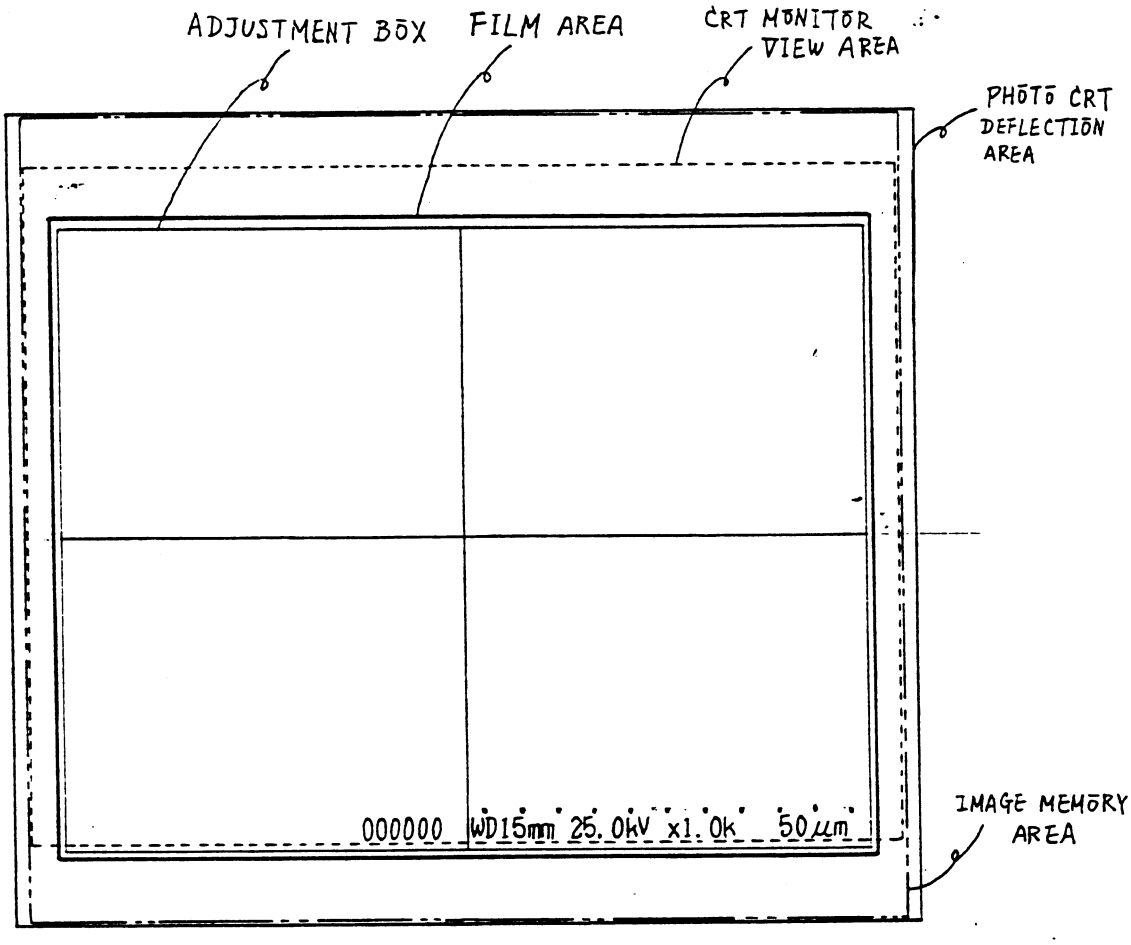

PHOTO

・PHOTO CRT DEF.AREA	: 126×114mm	(528×480pixel)
・IMAGE MEMORY AREA	: 122×114mm	(512×480pixel)
・CRT MONITOR VIEW AREA	: 122× 95mm	(512×400pixel)
・PHOTO FILM AREA	: 114× 89mm	(479×374pixel)
・ADJUSTMENT BOX	: 112× 87mm	(470×365pixel)

VIEW MONITOR

・CRT MONITOR VIEW AREA	: 195×152mm	(512×400pixel)
・CRT MONITOR MENU SIZE	: 244×186mm	(640×480pixel)

VIEW RATIO of MONITOR : ×1.6
PIXEL ASPECT : 1 : 1
PHOTO PIXEL RESOLUTION : 4.2dot/mm(107DPI)

PCB NAME	SW,VR NAME	FUNCTION
ANALOG	VR1	SLOW3,4:SG-X CYCLE(Thx=4ms,TP3)
	VR2	SLOW2 :SG-X CYCLE(Tx=4ms,TP3)
	VR3	SLOW1 :SG-X CYCLE(Tx=0.7ms.TP3)
	VR4	SLOW1-4:SG-Y AMPLITUDE(9.1V,TP4)
	VR5	SPLIT·DUALMAG:SG-X AMPLITUDE
	VR6	∞ -SCAN:X AMPLITUDE(12V,TP5)
	VR7	X-RAY MODE:X POSITION
	VR8	∞ -SCAN:Y AMPLITUDE(8.8V,TP6)
	VR9	X-RAY MODE:Y POSITION
	VR10	PHOTO-CRT:X WIDTH
	VR11	PHOTO-CRT:X POSITION
	VR12	PHOTO-CRT:Y WIDTH
	VR13	PHOTO-CRT:Y POSITION
	VR14	X-RAY MODE:X AMPLITUDE
	VR15	X-RAY MODE:Y AMPLITUDE
	VR16	(MAG-Y:UPD)
	VR17	MAG-X(COLUMN SCAN X WIDTH)
	VR18	COLUMN SCAN RIGHT ANGLE(ORTHOGONAL)
	VR19	(COLUMN SCAN RIGHT ANGLE:UPD)
	VR20	(MAG-X:UPD)
	VR21	MAG-Y(COLUMN SCAN Y WIDTH)
	VR22	TV-SCAN:X AMPLITUDE
	VR23	TV-SCAN:X POSITION
	VR24	TV-SCAN:Y AMPLITUDE
	VR25	TV-SCAN:Y POSITION
	VR26	ABC-CONTRAST:ADC LEVEL
	VR27	ABC-BRIGHTNESS:ADC LEVEL
	VR28	LINE-ANALYSIS1 AMPLITUDE
	VR29	LINE-ANALYSIS1 POSITION
	VR30	LINE-ANALYSIS2 AMPLITUDE
	VR31	LINE-ANALYSIS2 POSITION
	VR32	TV-SCAN:MEMORY AREA(Thx=10μS,TP24)
	VR33	PHOTO-CRT BRIGHTNESS(COURSE)
	VR34	PHOTO-CRT BRIGHTNESS(FINE)
	VR40	BSE1 SIGNAL:GAIN
	JP1	SHORT: NONE OPEN : DBC (X-SCAN)
	JP2	SHORT: NONE OPEN : DBC (Y-SCAN)
	JP3	SHORT: NONE OPEN : RASTER ROTATION (X-SCAN)
	JP4	SHORT: NONE OPEN : RASTER ROTATION (Y-SCAN)
	JP5	SHORT: NONE OPEN : DBC (BLK)
	JP6	SHORT: NONE OPEN : DBC (VIDEO)
	JP7	ALWAYS SHORT

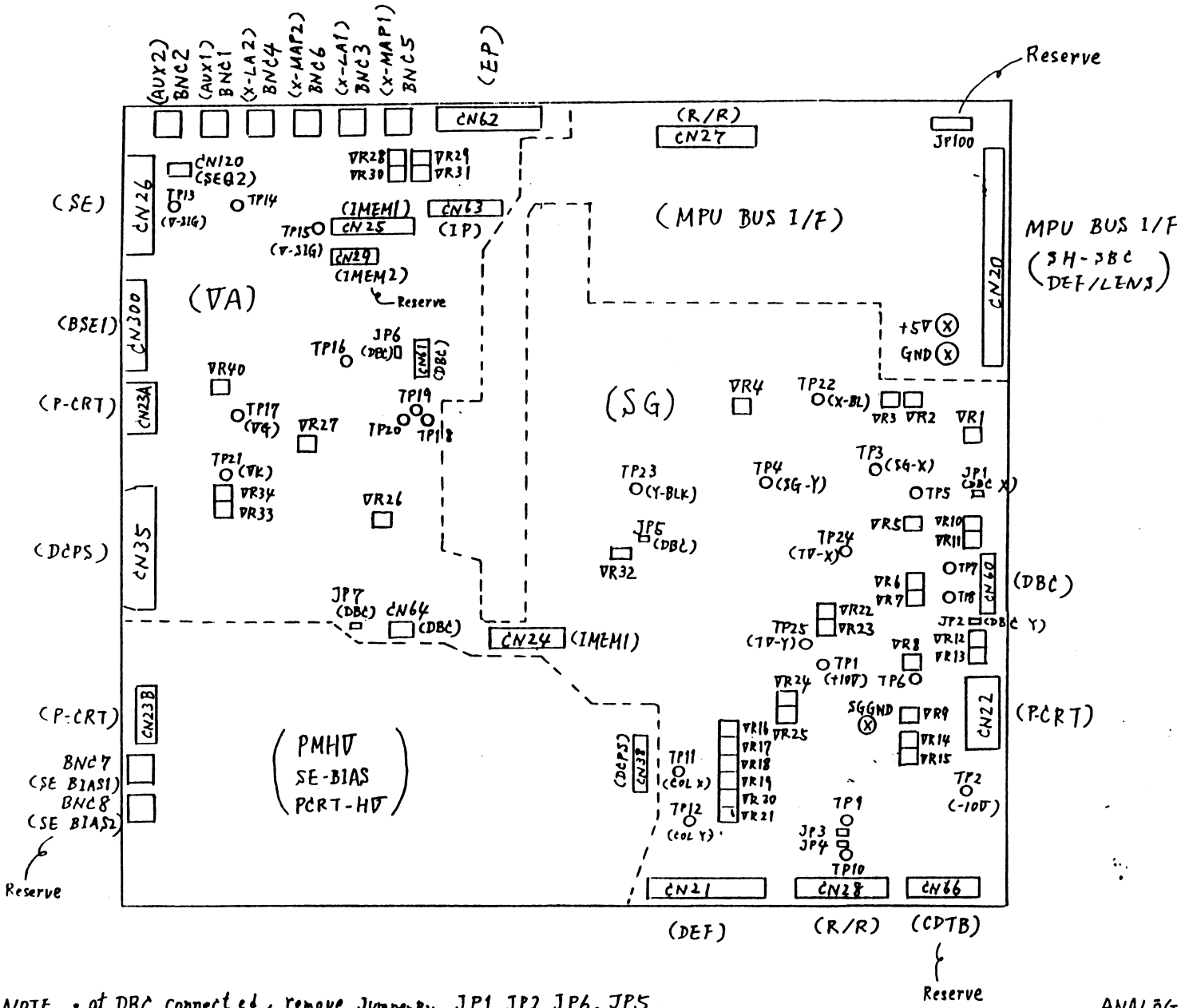

NOTE • at DBC connected, remove Jumperpin JP1, JP2, JP6, JP5.

ANALOG PCB

PCB NAME	SW,VR NAME	FUNCTION
DEF/LENS	VR1	OBJ-SPAN
	VR3	COND1-SPAN
	VR4	COND2-SPAN
	VR5	TV-X : MAG CENTER
	VR6	SLOW-X : MAG CENTER
	VR7	TV-Y : MAG CENTER
	VR8	SLOW-Y : MAG CENTER
	VR9	DINAMIC FOCUS CENTER
	VR10	REFERENCE : +10V(TP1)

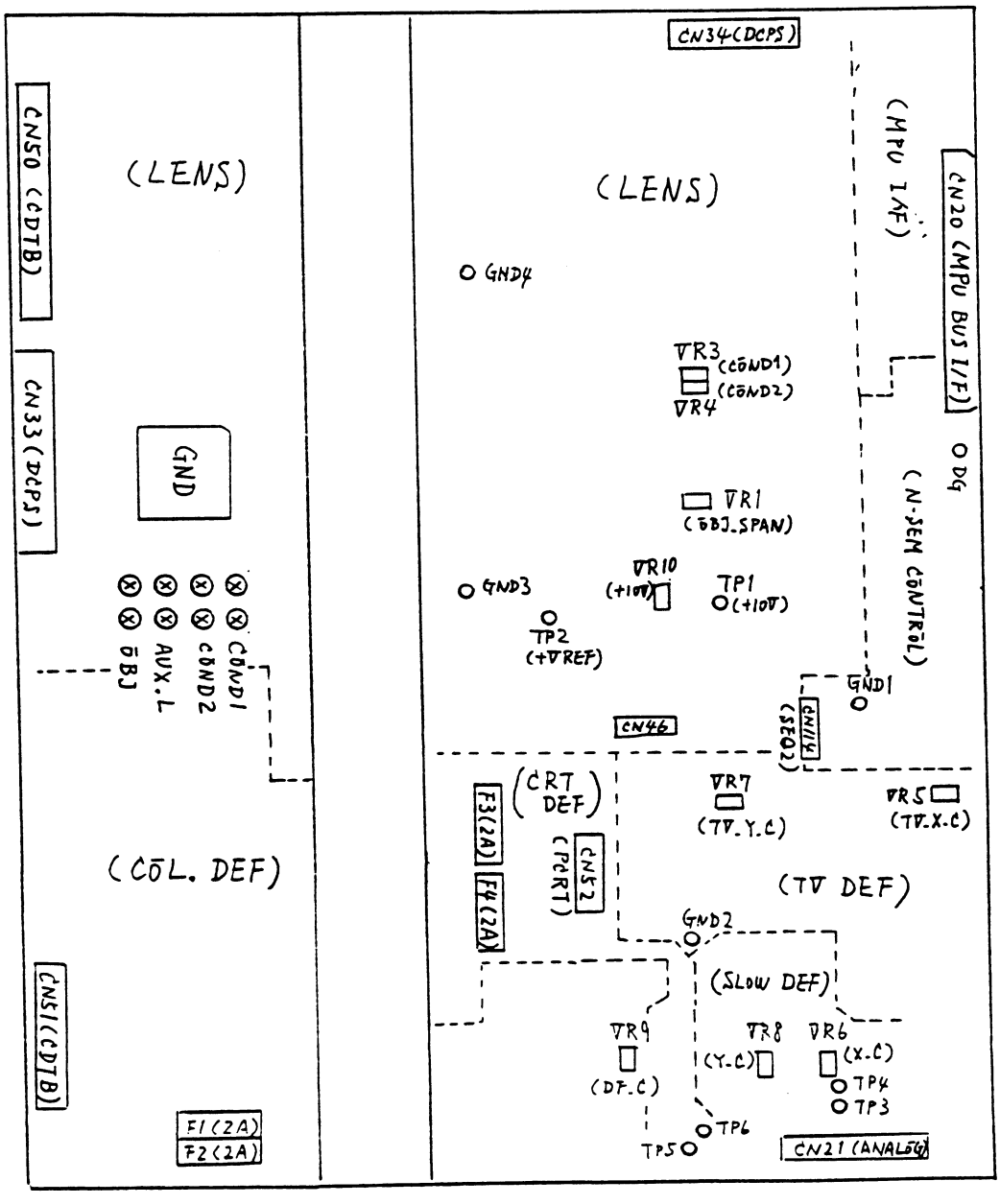

DEF/LENS PCB

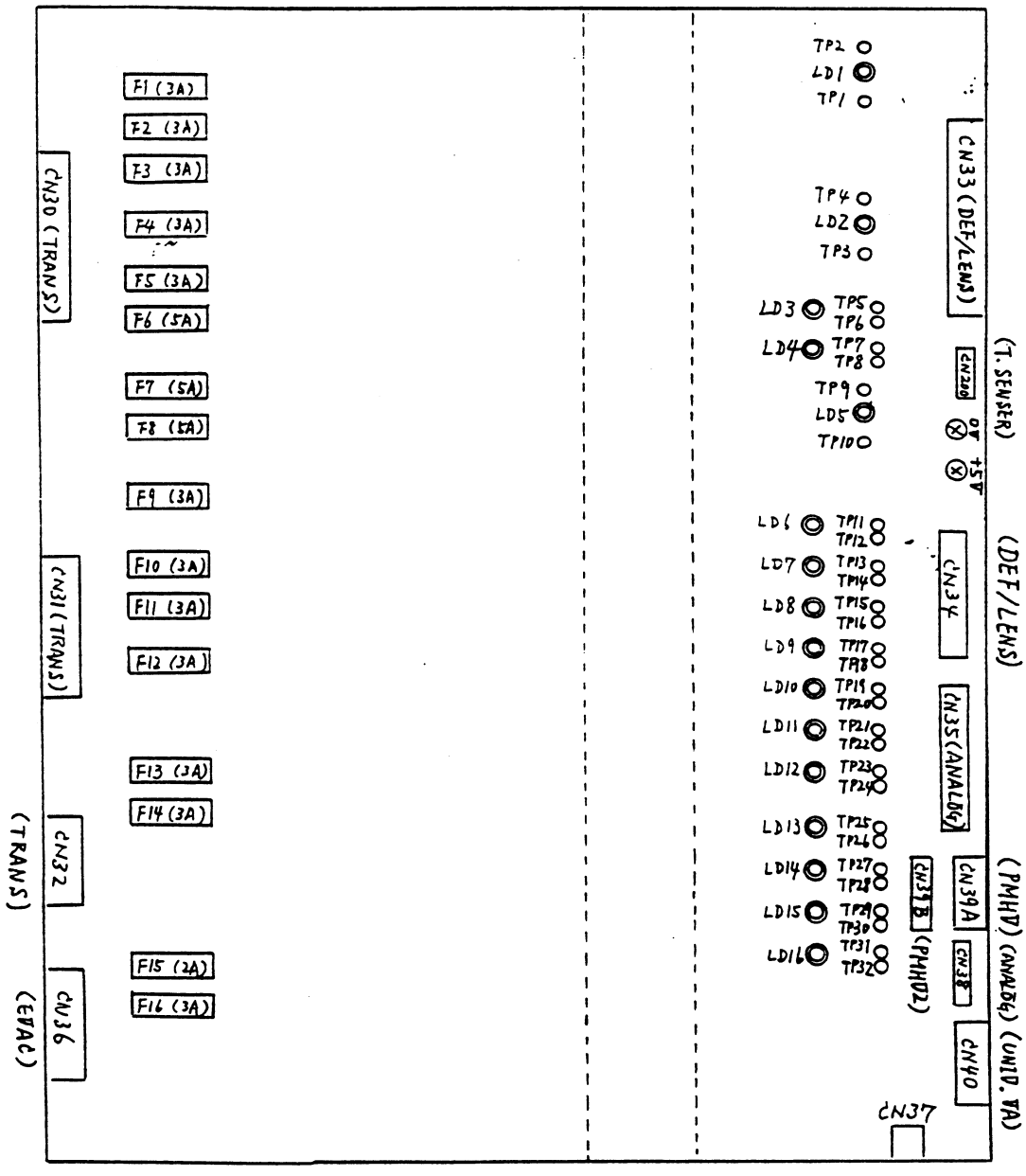
CN33 (DEF/LENS)
CN32B
OT
+5V
CN34
CN35 (ANALOG)
CN39A
CN31B (PMHDL)
CN38
CN40
CN37
(T.SENSER)
(DEF/LENS)
(PMHD) (ANALOG) (UNIP. TA)
TP2
LD1
TP1
TP4
LD2
TP3
LD3
TP5
TP6
LD4
TP7
TP8
TP9
LD5
TP10
LD6
TP11
TP12
LD7
TP13
TP14
LD8
TP15
TP16
LD9
TP17
TP18
LD10
TP19
TP20
LD11
TP21
TP22
LD12
TP23
TP24
LD13
TP25
TP26
LD14
TP27
TP28
LD15
TP29
TP30
LD16
TP31
TP32
F1 (3A)
F2 (3A)
F3 (3A)
F4 (3A)
F5 (3A)
F6 (5A)
F7 (5A)
F8 (5A)
F9 (3A)
F10 (3A)
F11 (3A)
F12 (3A)
F13 (3A)
F14 (3A)
F15 (2A)
F16 (3A)
CN30 (TRANS)
CN31 (TRANS)
CN32
(TRANS)
CN36
(EVAC)

DCPS PCB

PCB NAME	SW,VR NAME	FUNCTION	
SH−SBC	SW1A	0 : N-SEM & W 1 : N-SEM & LaB_6 2 : H-SEM & W 3 : H-SEM & LaB_6 4 : UPD & W 5 : UPD & LaB_6 6 : 7 :	8 : 9 : A : B : C : D : E : F :
	SW1B	0 : 1 : 2 : 3 : 4 : 5 : 6 : 7 :	8 : 9 : A : B : C : D : E : F :
	SW2	OFF	ON
		1 JAPANESE 2 NTSC 3 NONE 4 NONE 5 RESERVE 6 RESERVE 7 8 NONE	ENGLISH PAL X-RAY MODE PSEUDO COLOR LANGUAGE CHANGE
	SW3	1 NONE 2 NONE 3 NONE 4 RESERVE 5 0-270Pa 6 NONE 7 NONE 8 NONE	RR,DF,TC RS-232C SCSI 0-530Pa BSE2 ELEMENT MOD GRAPHIC
	SW4	1 RESERVE 2 RESERVE 3 RESERVE 4 5 RESERVE 6 7 SYSTEM 1 OFF 8 SYSTEM 2 OFF	 SYSTEM 1 ON SYSTEM 2 ON
	JP1	SHORT: WDT NORMAL(AUTO RESET) OPEN : WDT NONE (for DEBUG)	
	JP2	SHORT: BUZZER LOUD OPEN : BUZZER LOW	

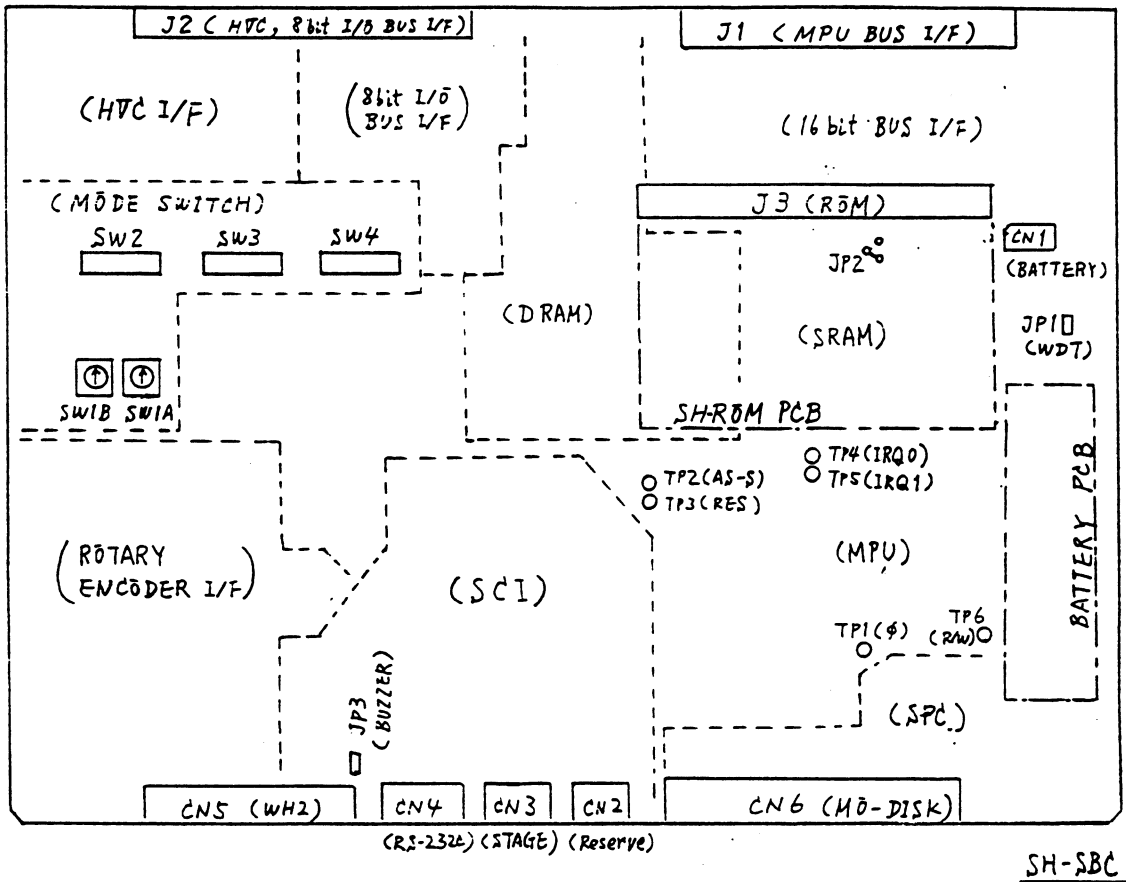

SH-SBC PCB

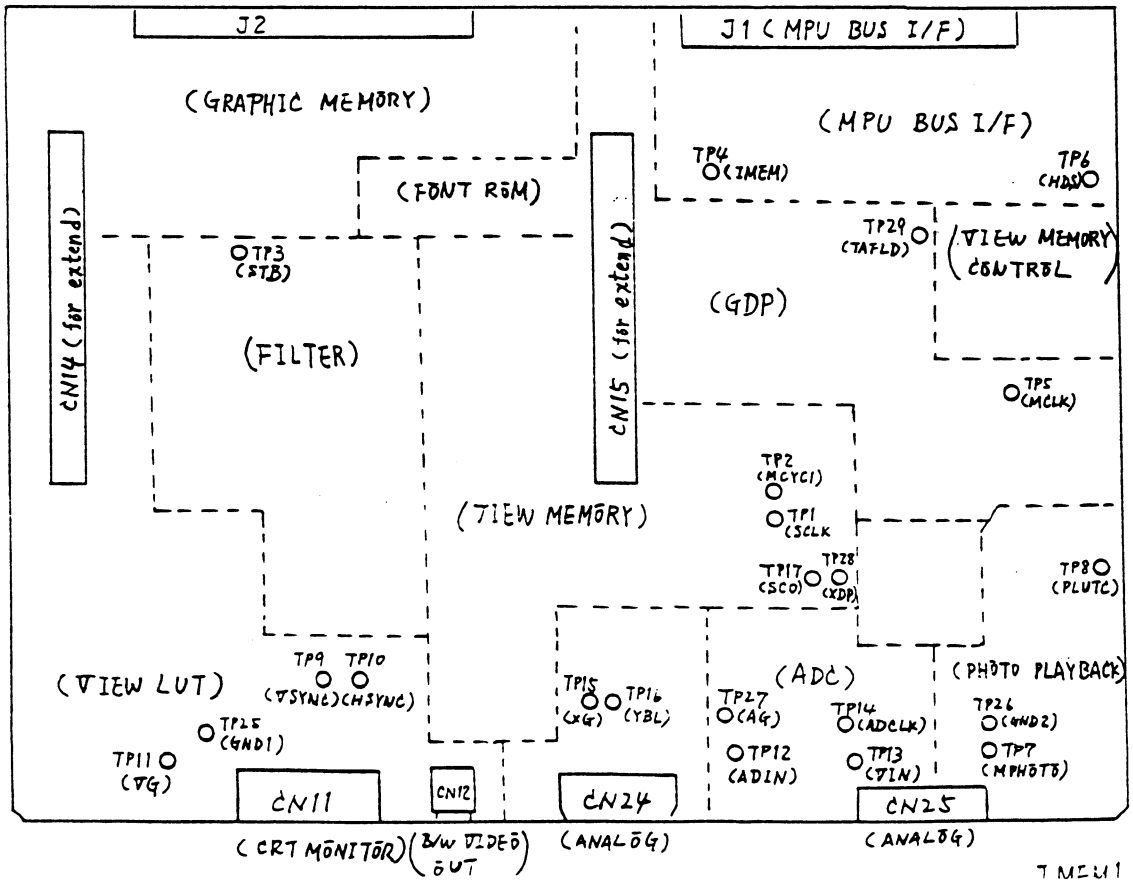

TMEM1 PCB

PCB NAME	SW,VR NAME	FUNCTION
HVC2	VR1	ACC.VOLTAGE ADJUST
	VR2	FILAMENT CURRENT ADJUST
	VR3	FREQUENCY(32μS)

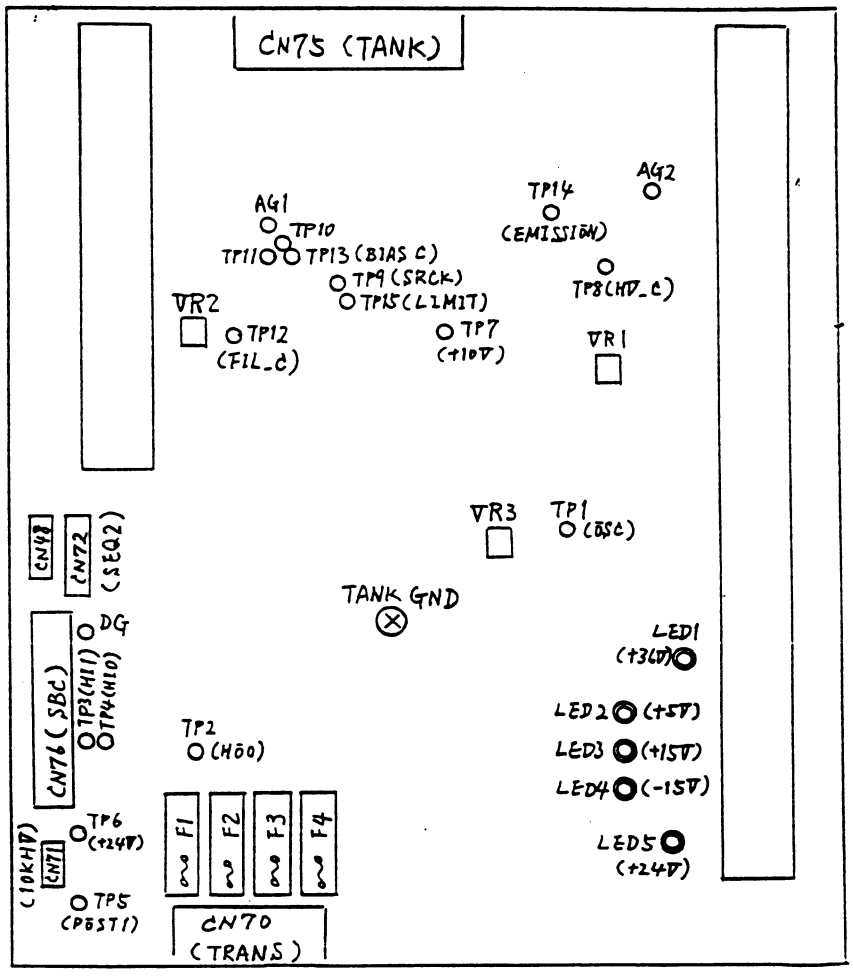

HVC2 PCB

PCB NAME	SW,VR NAME	FUNCTION
SEQ2	VR1 VR2 VR3	GUN-VACUUM LEVEL ADJ. CHAMBER-VACUUM LEVEL ADJ. SPECIMEN-CHANGER VACUUM ADJ.
	JP1	1-2 SHORT : HIGH 2-3 SHORT : NATURAL
	JP2	SHORT: NONE OPEN : UTW
	JP3	1-2 SHORT: W-GUN 2-3 HSORT: LaB6-GUN
	JP4	1-2 SHORT: W-GUN 2-3 SHORT: LaB6-GUN
	JP5	ALWAYS SHORT
	JP6	SHORT: NONE OPEN : BSE2
	JP7	SHORT: NONE OPEN : BSE1
	JP8	SHORT: NONE OPEN : S.CHANGE

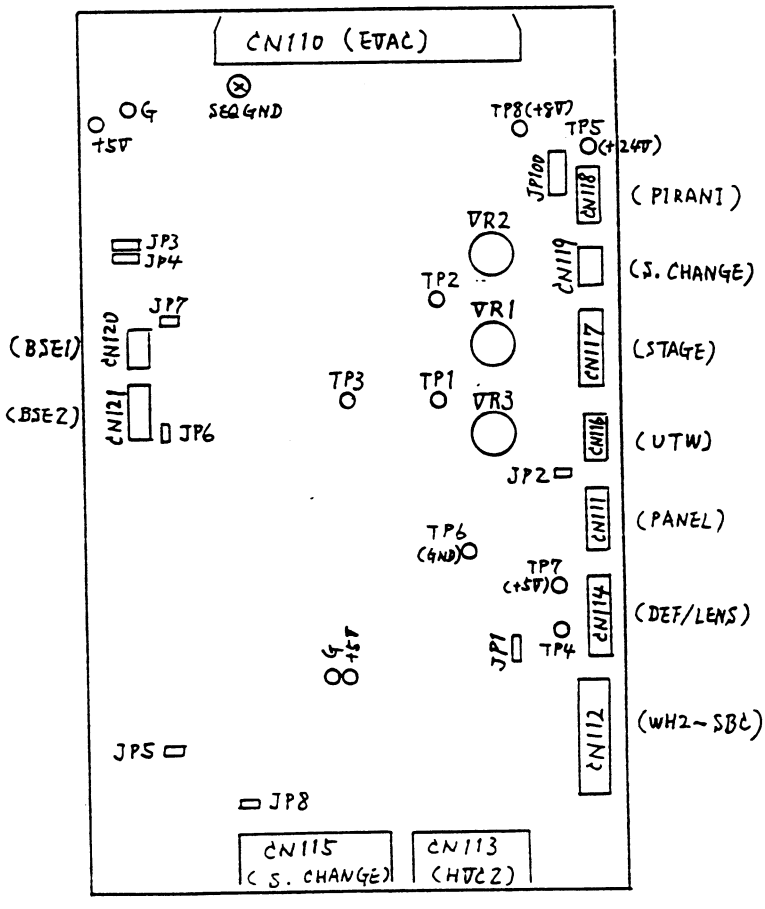

SEQ PCB

PCB NAME	SW,VR NAME	FUNCTION
HR CRT	VR 1	FOCUS
	VR 2	〃
	VR 3	〃
	VR 4	〃
	VR 5	〃
	VR 6	Correction of magnification error on CRT center and edge (X scale)
	VR 7	Correction pincushion distortion (X scale)
	VR 8	Correction of magnification error on CRT center and edge (Y scale)
	VR 9	Correction pincushion distortion (Y scale)
	VR 10	SPOT POSITION(X scale)
	VR 11	SPOT POSITION(Y scale)
	VR 12	SQUARING WAVEFORM GAIN (X)
	VR 13	SQUARING WAVEFORM GAIN (Y)
	SW 1	SINGLE UNIT ADJUSTMENT

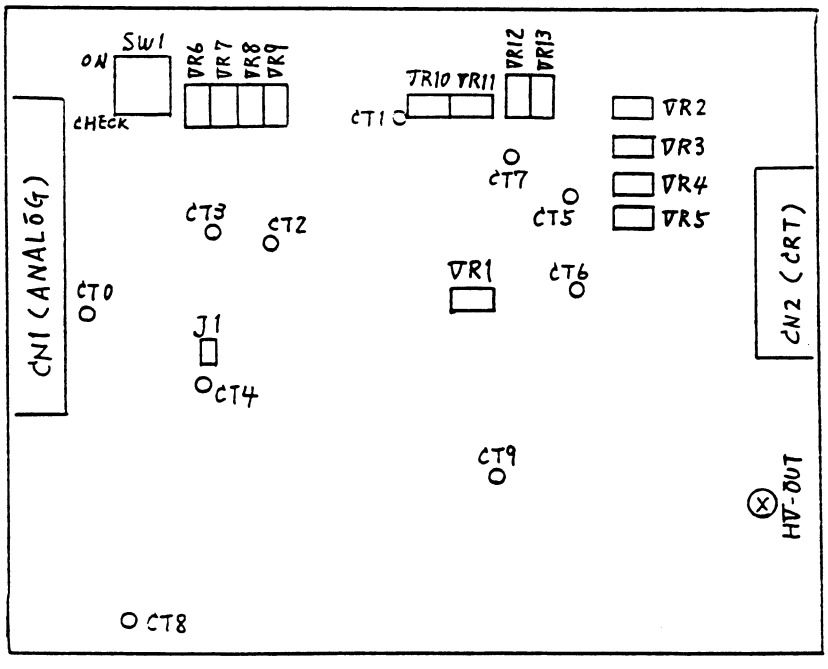

HR PCB

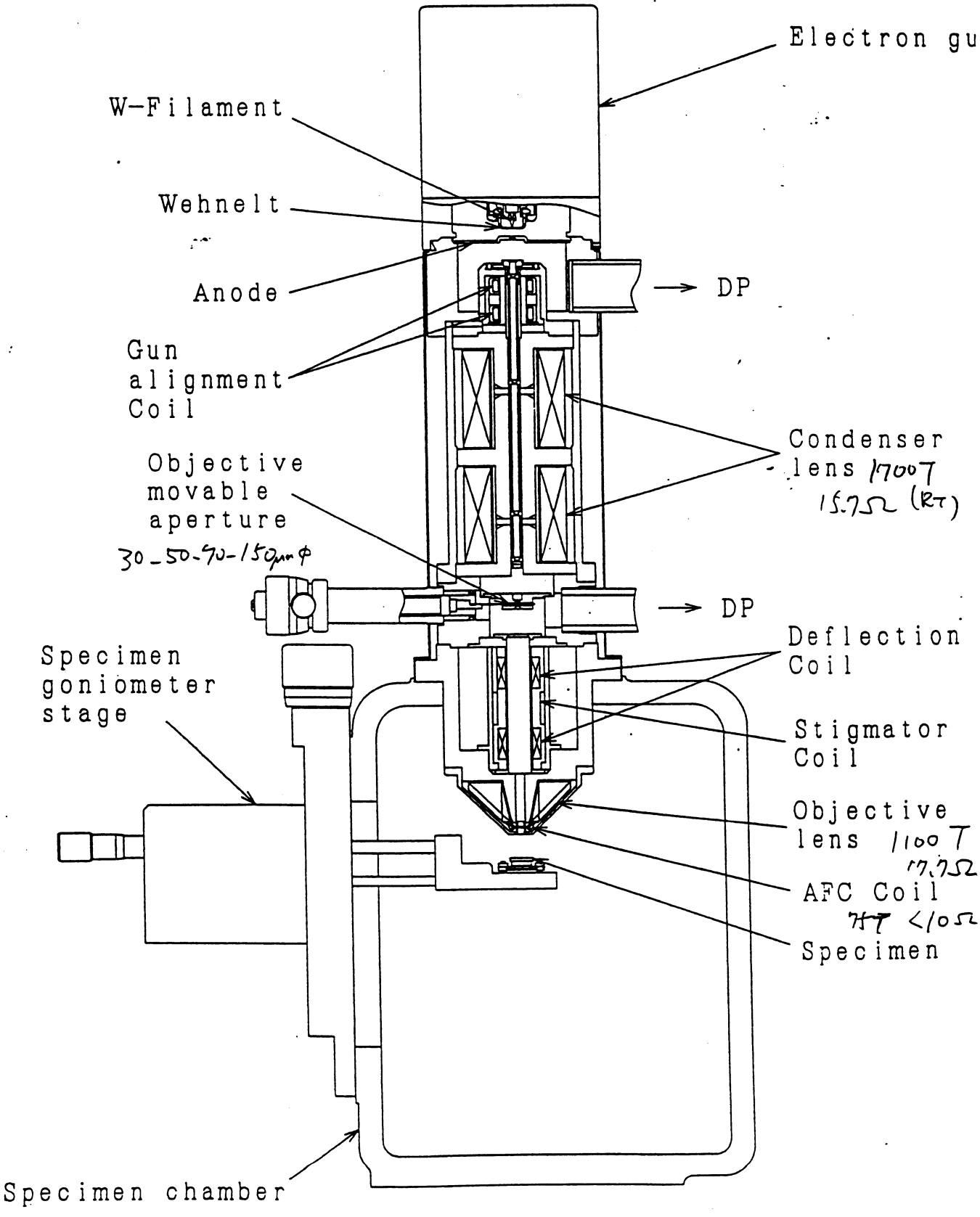

鏡体部の内部構造

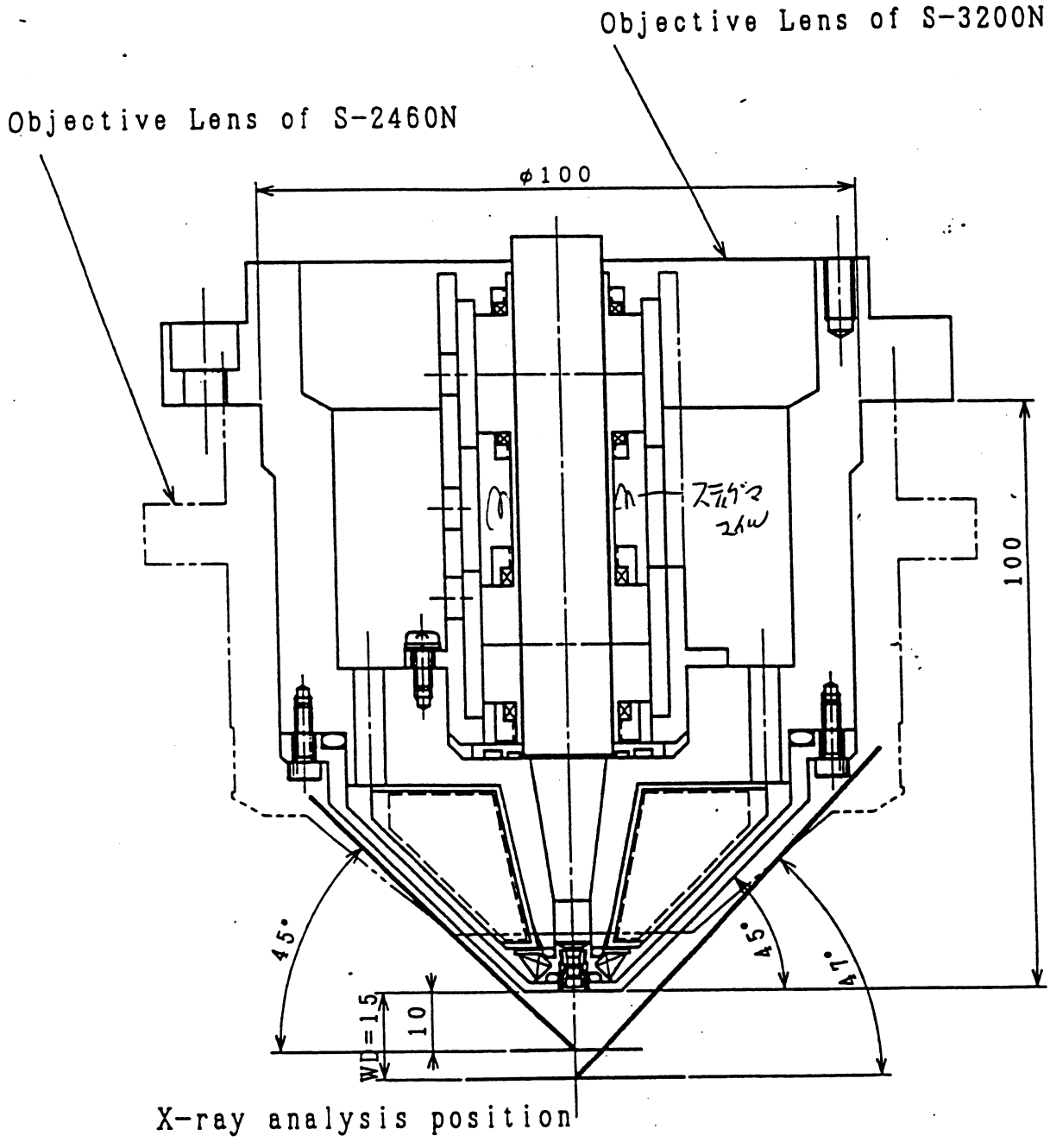

Angle of Specimen Tilt

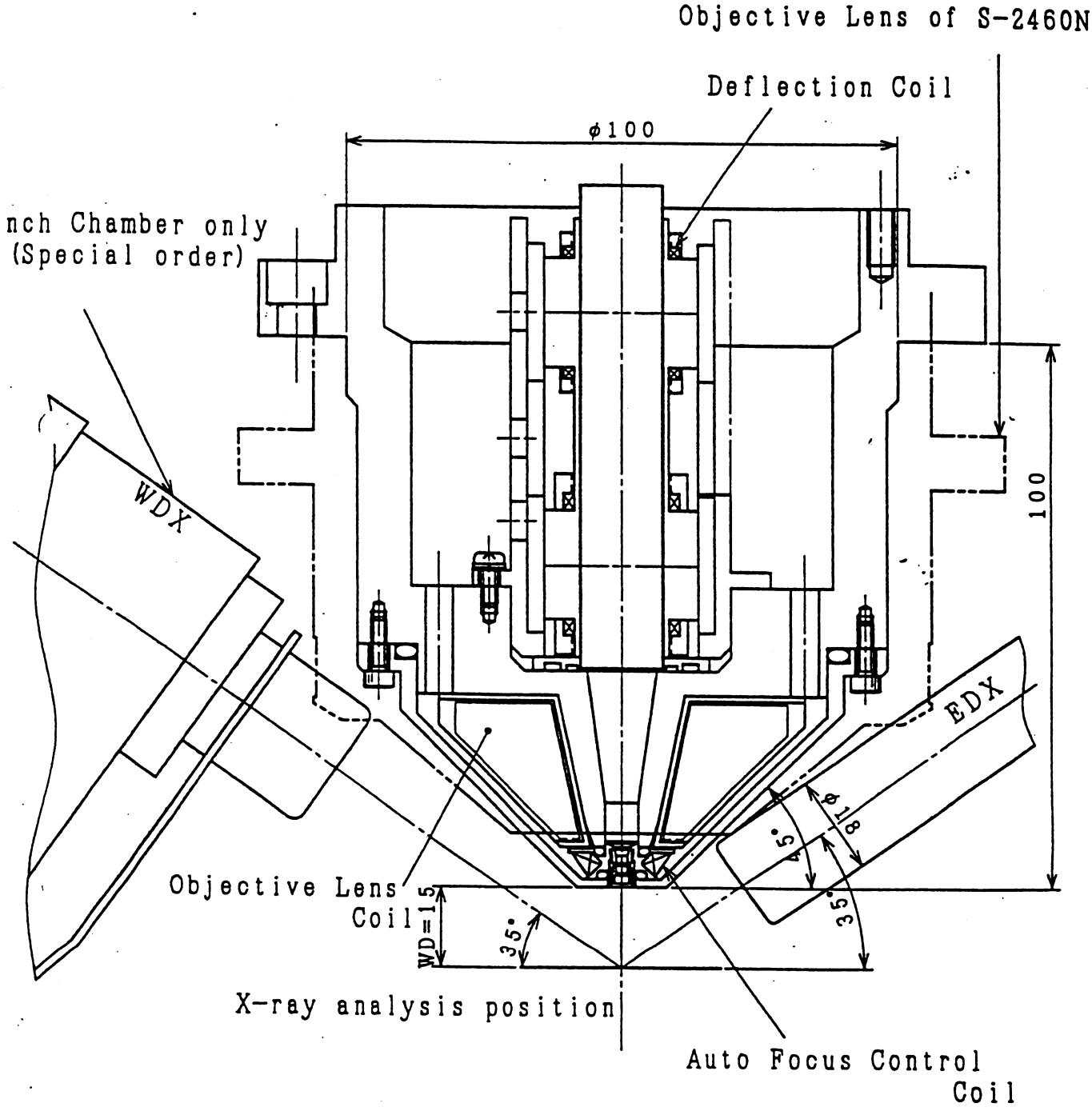

X-ray Analysis of S-3200N

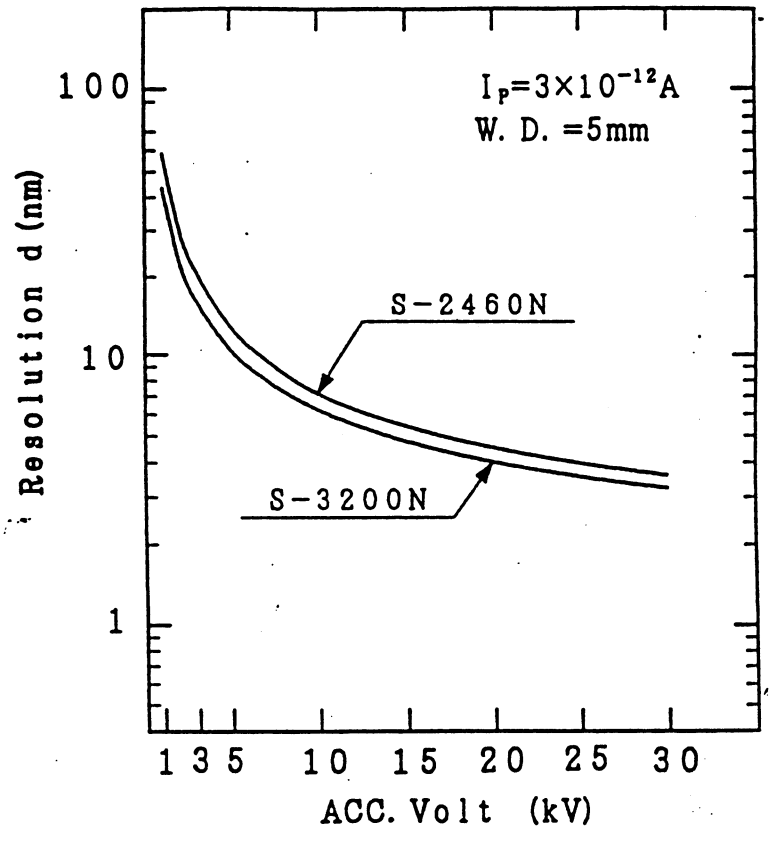

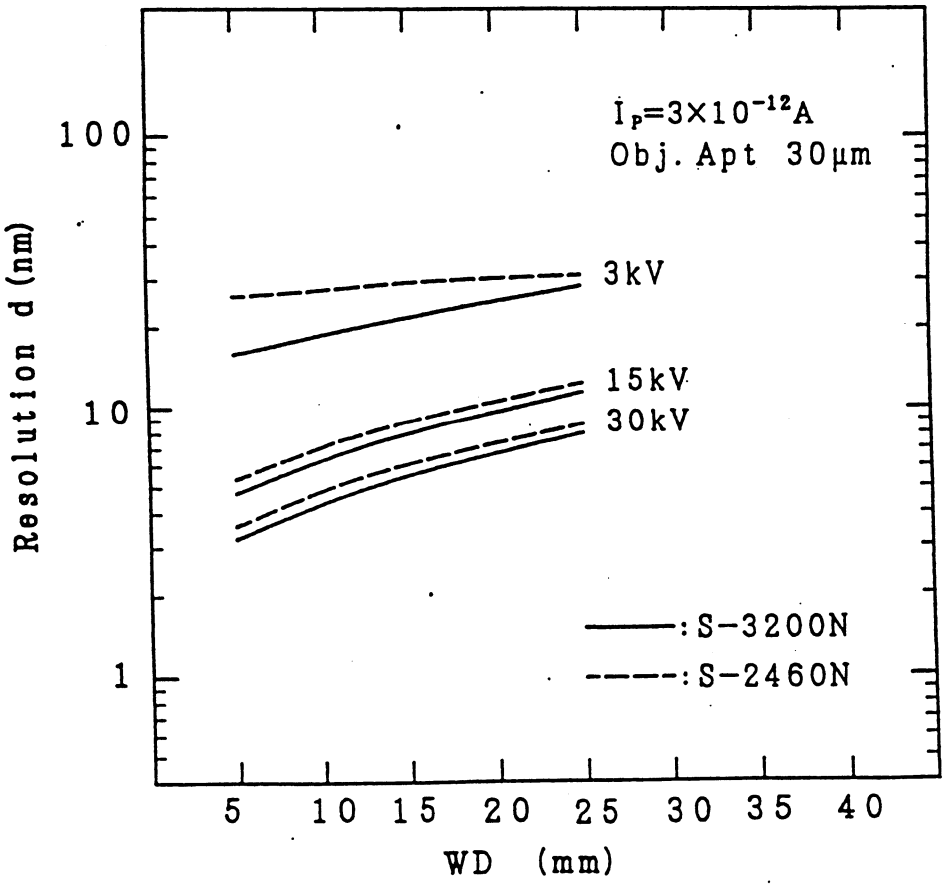

Comparison of Resolution
S-3200N vs S-2460N

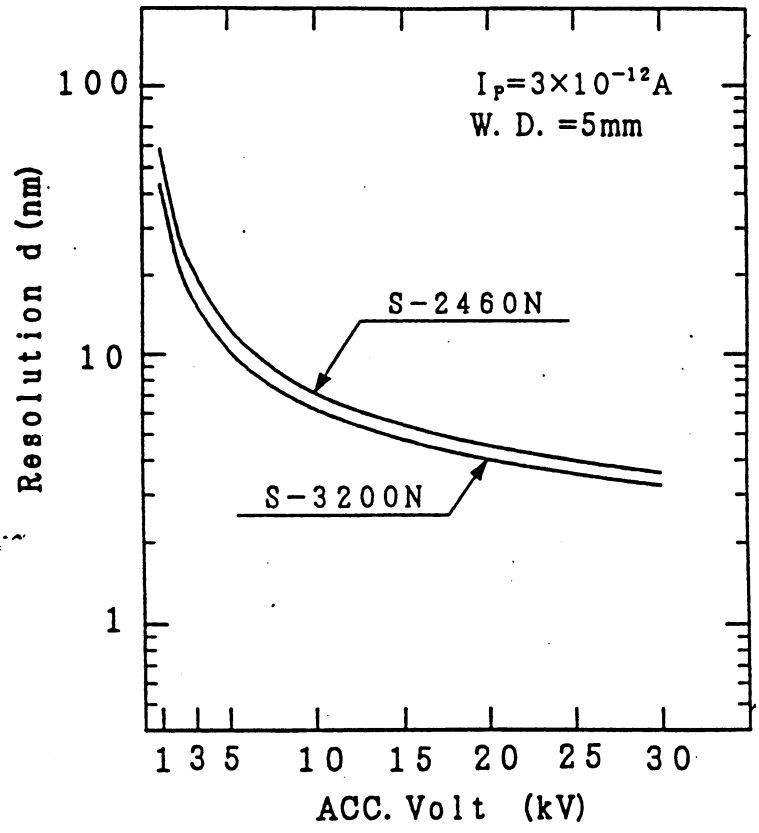

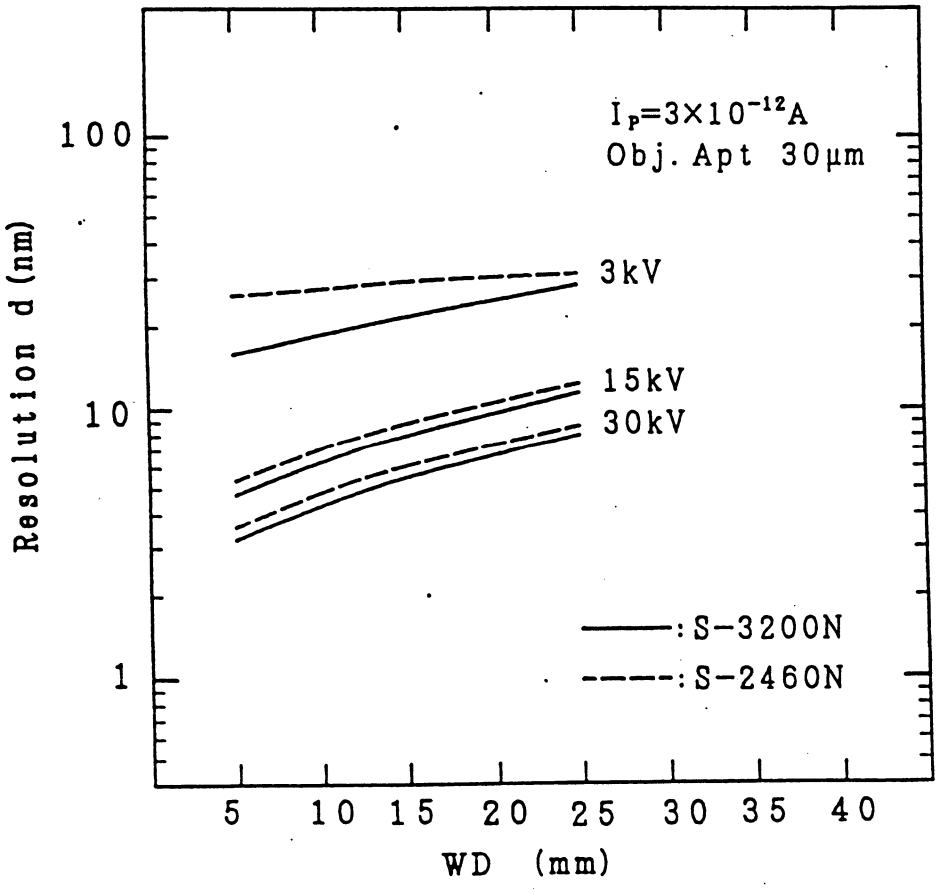

Comparison of Resolution
S-3200N vs S-2460N

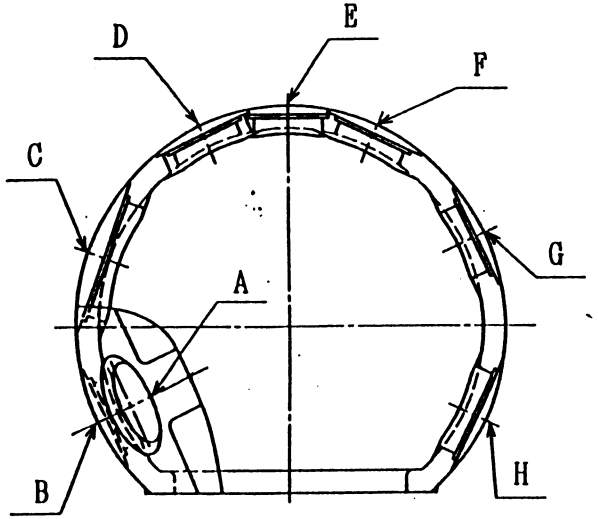

6″

	Std	Exp1	Exp2	Exp3		備考
A		EDX	CL	CL		
B		マニピュレータ	アニュラ	ロビンソン		※ ロビンソンBポートにロビンソン取付時は、N-SEL時大型X線高分解能検出器、但しN-SEL時EDX不可
C	SED	SED	SED	SED		
D		EXランプ	—	—		
E	(ロック)	(ロック)	(ロック)	(ロック)		
F		EXランプ	EXランプ	EXランプ		※ クライオ用トラップ (SP-EX取付不可)
G	ロビンソン	ロビンソン	ロビンソン	アニュラ		
H		SP-EX	SP-EX	SP-EX		

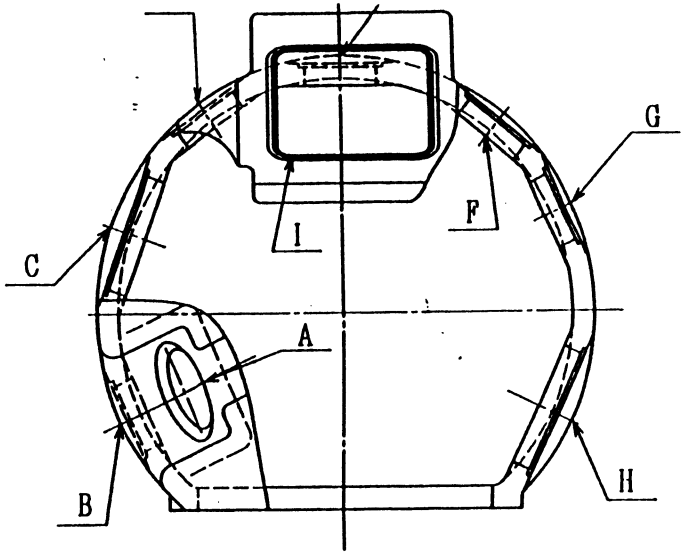

8″(大形)

	Std	Exp1	Exp2	Exp3	Exp4	備考
A		CL	EDX	CL	EDX or CL	
B		ロビンソン	マニピュレータ	マニピュレータ or アニュラ	(ロビンソン)	※ Bポートにロビンソン取付時は、N-SEL時大型X線高分解能検出器
C	SED	SED	SED	SED	SED	
D					(アニュラ)	※ Dポートにアニュラは、アニュラのプリアンプ部 (抵) 改造要
E	(ロック)	(ロック)	(ロック)	(ロック)	(ロック)	
F		EXランプ	EXランプ	EXランプ	EXランプ	
G	ロビンソン	アニュラ	ロビンソン	ロビンソン	ロビンソン	
H		SP-EX	SP-EX or アニュラ	SP-EX	SP-EX or ロビンソン	※ Hポートにアニュラ取付時は、特フランジ必要
I		—	CL	—	WDX	※ Iポートに CL取付時は、特フランジ必要

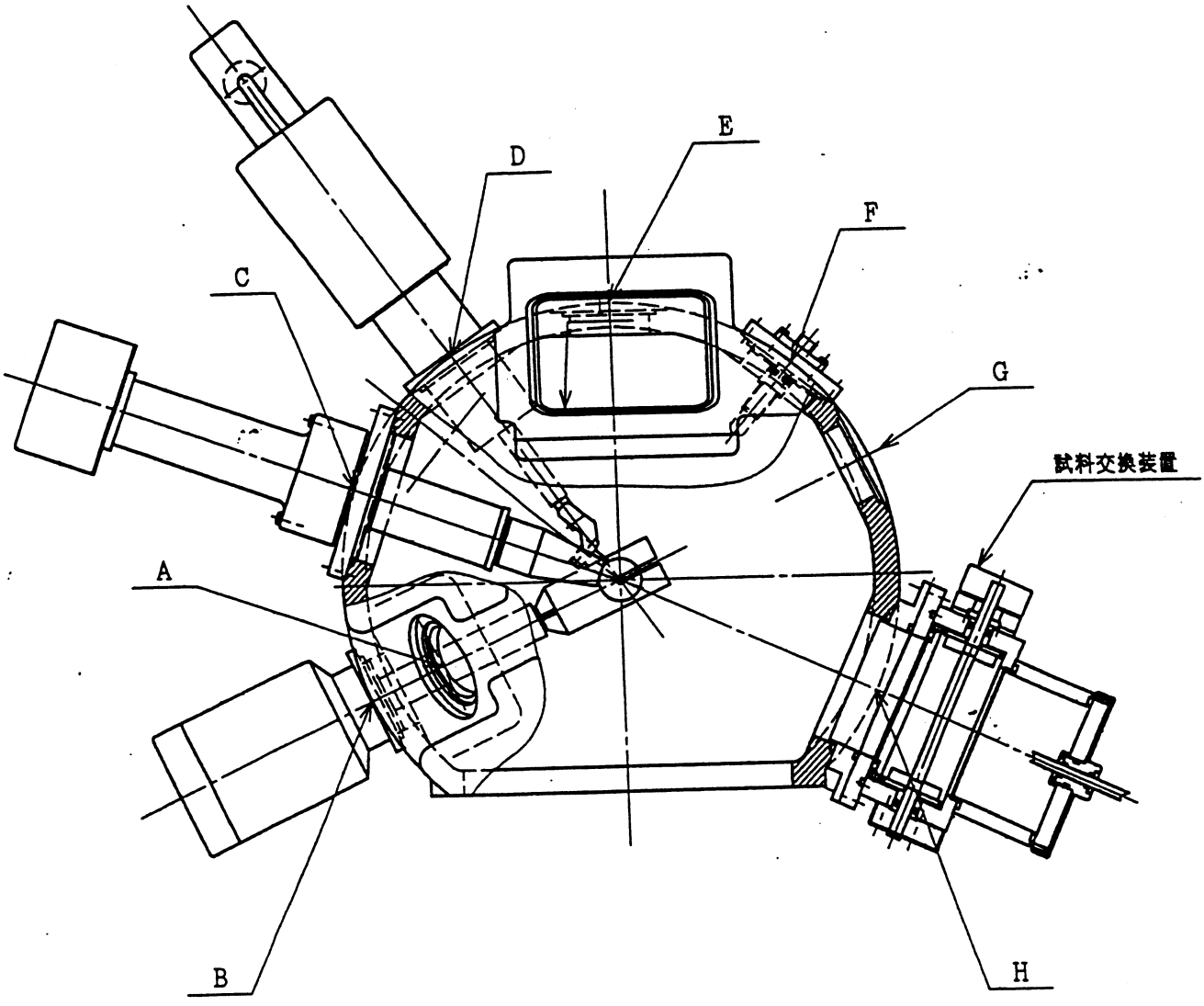

A	EDX検出器用ポート
B	ロビンソン反射電子検出器
C	二次電子検出器
D	四分割半導体検出器
E	ステージロック機構
F	試料交換室ランプ
G	空きポート
H	試料交換装置
I	WDX検出器用ポート

大型試料室ポートレイアウト

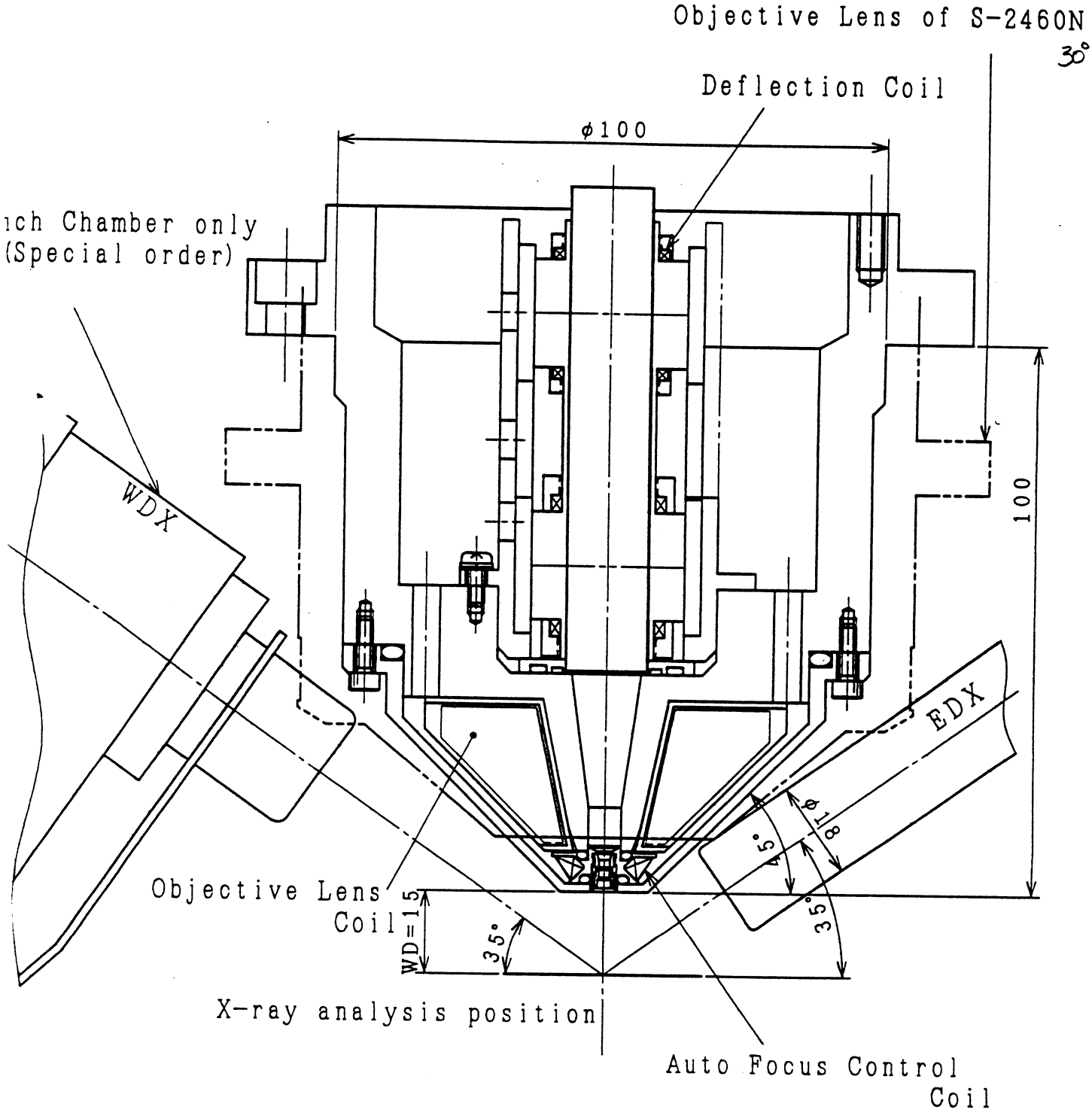

X-ray Analysis of S-3200N

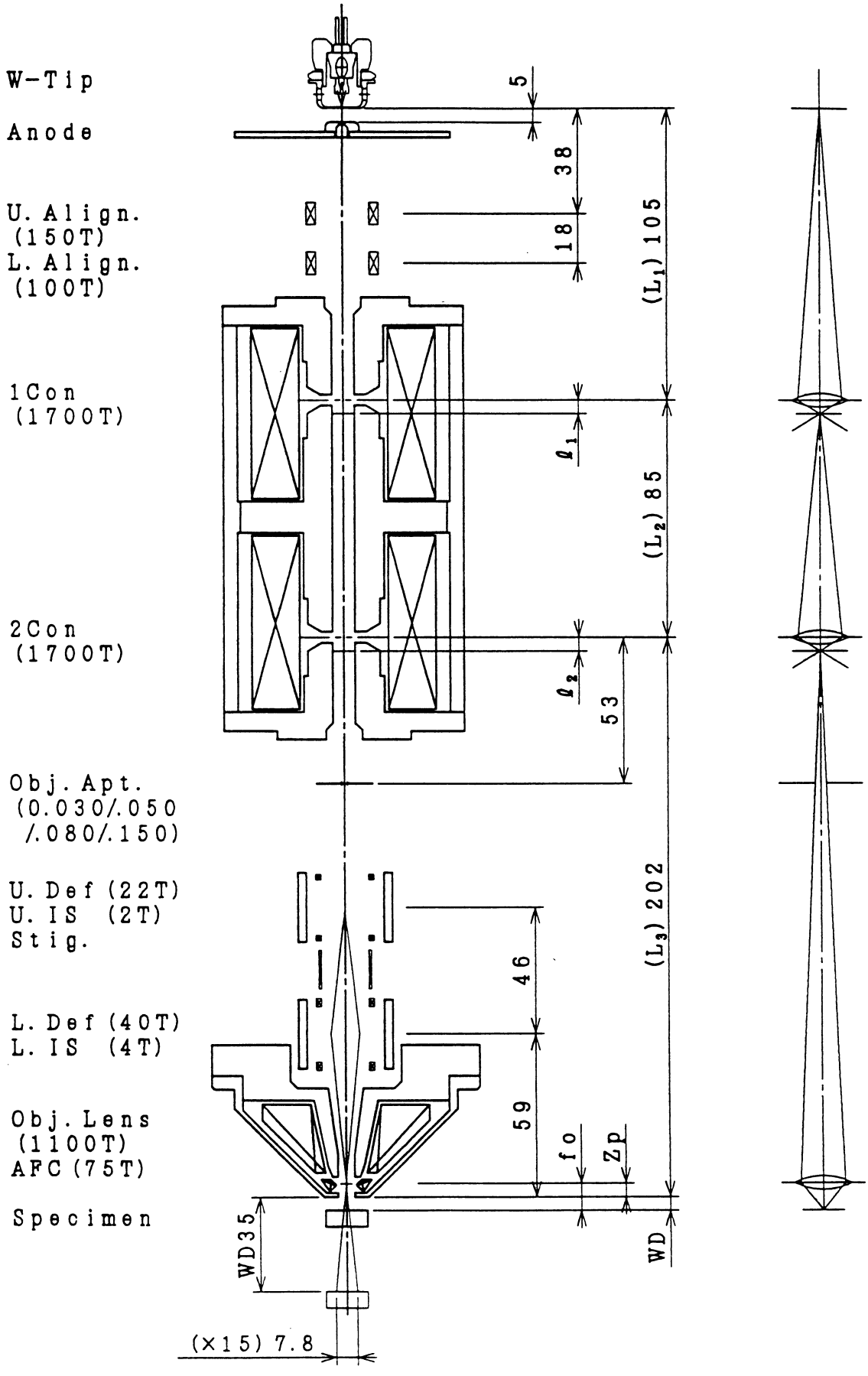

Electron Optics of S-3200N

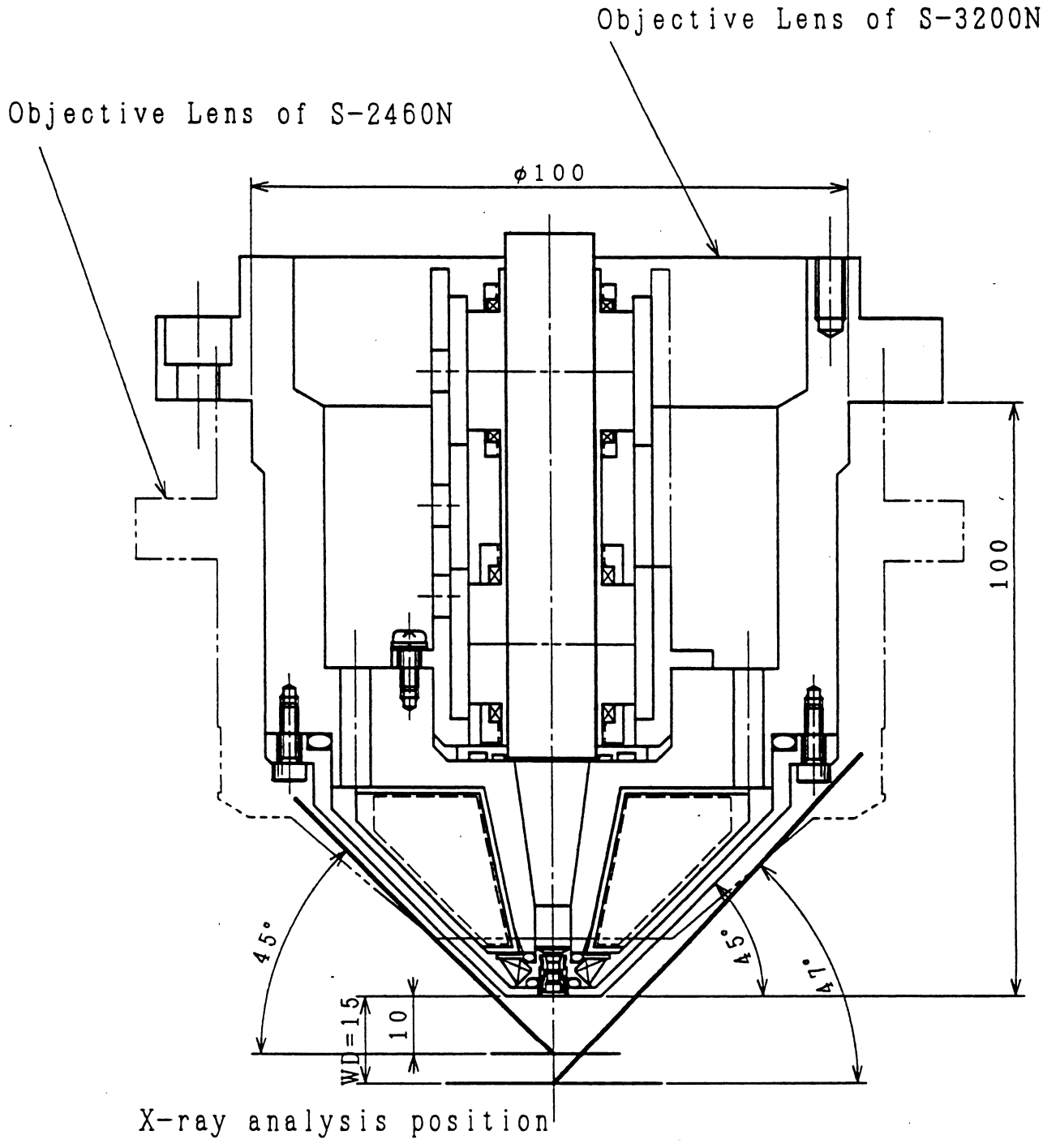

Angle of Specimen Tilt